# United States Patent [19]

**Dorrell**

[11] **3,801,954**

[45] **Apr. 2, 1974**


[54] **COUPLED ELECTRICAL CONNECTOR WITH HEAT-ACTIVATED MEMORY LOCKING MEANS**


[75] Inventor: **Robert F. Dorrell,** Des Plaines, Ill.

[73] Assignee: **Bunker Ramo Corporation,** Oak Brook, Ill.



[22] Filed: **Nov. 28, 1972**

[21] Appl. No.: **310,058**

[52] **U.S. Cl.** ..... **339/90 R,** 285/82, 285/187, 339/30, 339/113 R

[51] **Int. Cl.** ..... **H01r 13/54,** H01r 13/20

[58] **Field of Search** ..... 339/30, 89, 90, 278 C, 339/278 D, 113 R; 285/81, 82, 89, 187



[56] **References Cited**

UNITED STATES PATENTS

| | | | |
|---|---|---|---|
| 2,540,575 | 2/1951 | Finizie | 339/30 X |
| 2,773,710 | 12/1956 | Smith | 285/187 |
| 2,984,811 | 5/1961 | Hennessey et al. | 339/90 R X |
| 2,988,723 | 6/1961 | Archer | 339/30 |
| 3,112,146 | 11/1963 | Barnhart | 339/30 |
| 3,390,900 | 7/1968 | McCormick et al. | 285/89 X |
| 3,411,812 | 11/1968 | Prince et al. | 285/187 |

FOREIGN PATENTS OR APPLICATIONS

| | | | |
|---|---|---|---|
| 943,130 | 8/1961 | Great Britain | 285/187 |



*Primary Examiner*—Bobby R. Gay
*Assistant Examiner*—Lawrence J. Staab
*Attorney, Agent, or Firm*—Frederick M. Arbuckle; N. Cass



[57] **ABSTRACT**

An electrical connector comprised of a plug and receptacle coupled together using a screw or bayonet-type coupling and additionally including a heat-activatable, generally ring-shaped locking memory member made of a specially chosen memory alloy, such as 55-Nitinol. The locking memory member is provided with original and intermediate shapes chosen for coaction with predetermined opposed annular surfaces provided on the plug and receptacle so that the application of moderate amounts of heat causes the locking memory member to rigidly lock the plug and receptacle in coupled engagement. The locking memory member additionally includes memory indicating tabs for providing an externally visible indication of the locking provided by the locking memory member.


**14 Claims, 10 Drawing Figures**

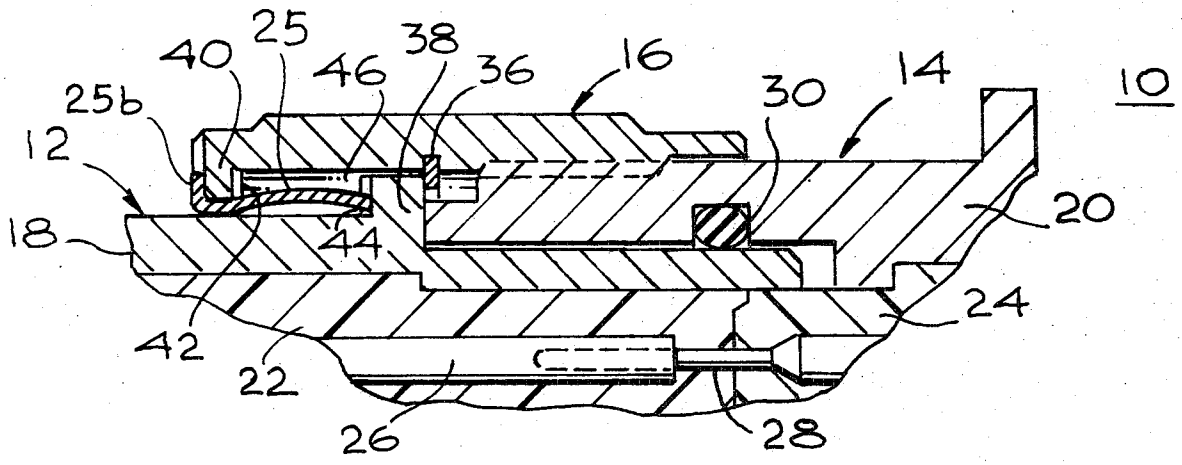

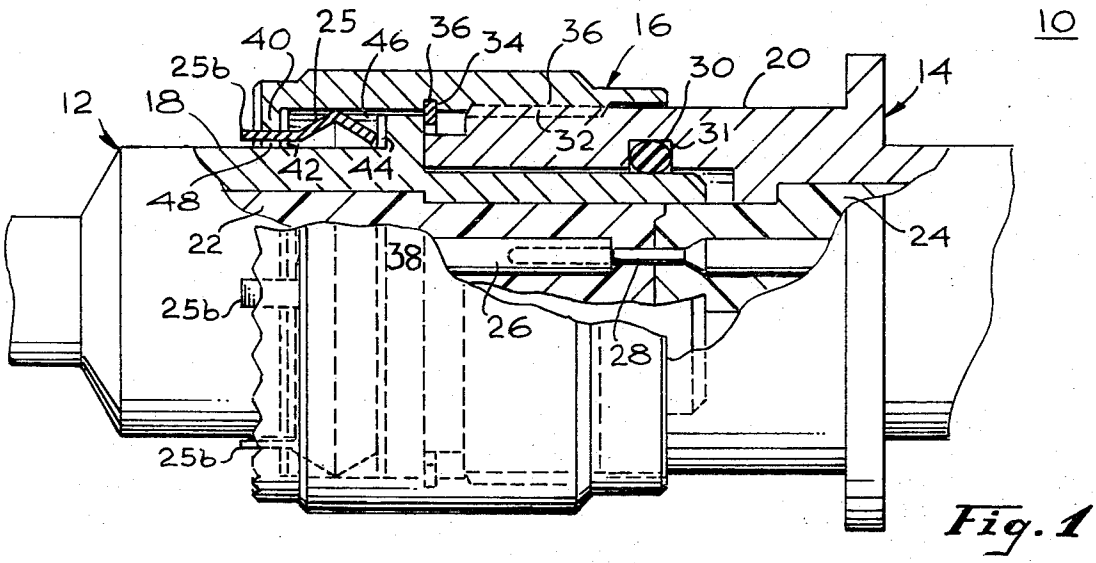


Fig. 1

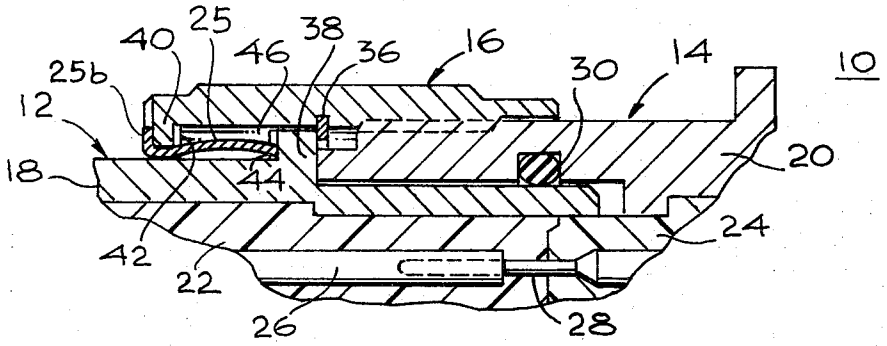


Fig. 4

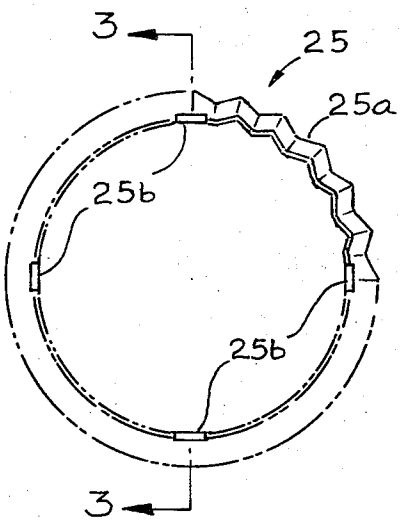


Fig. 2

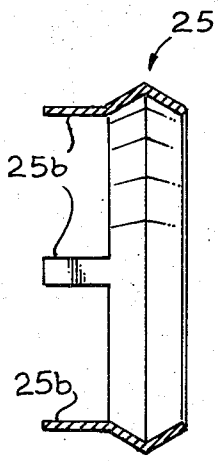


Fig. 3

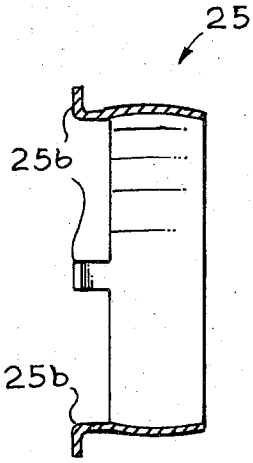


Fig. 5

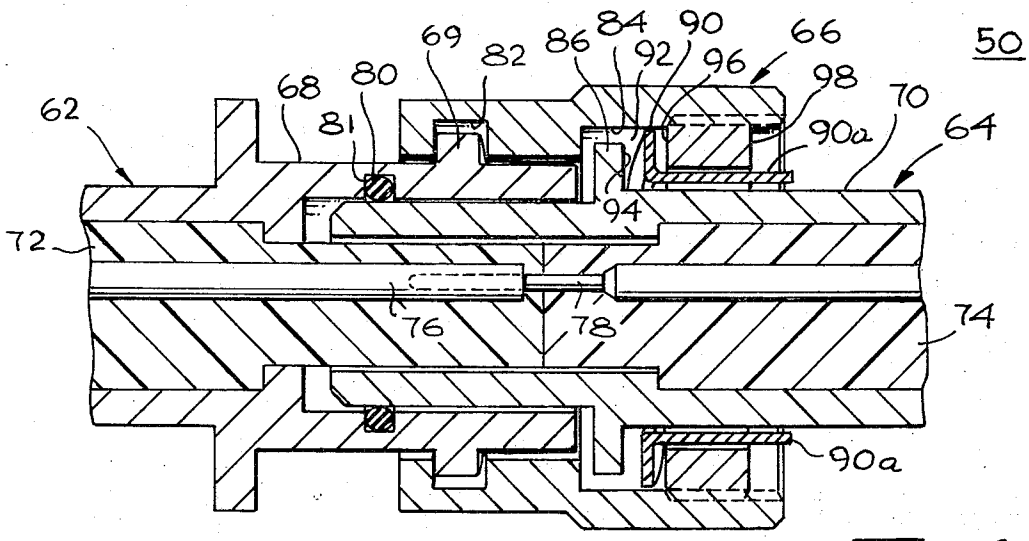


Fig. 6

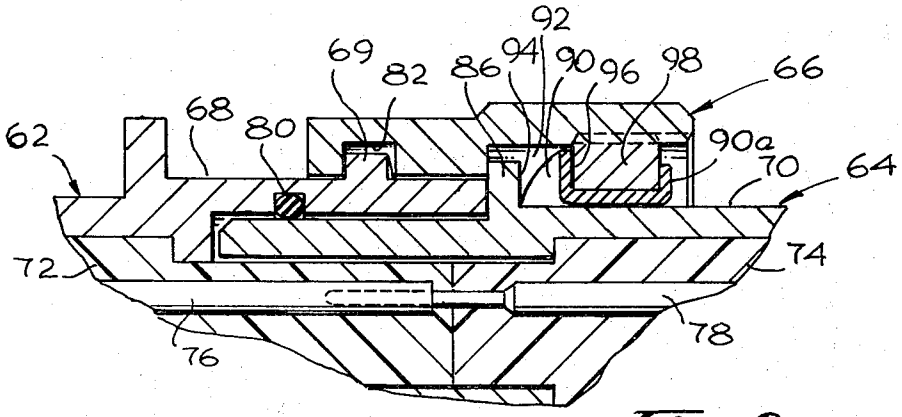


Fig. 9

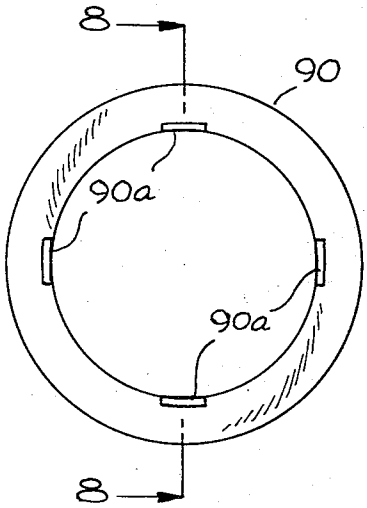


Fig. 7

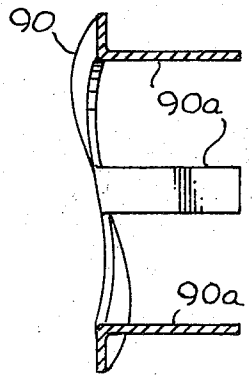


Fig. 8

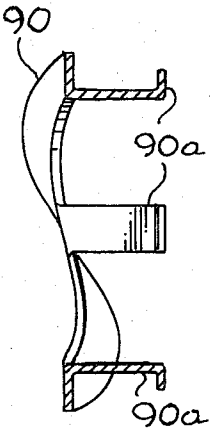


Fig. 10

# COUPLED ELECTRICAL CONNECTOR WITH HEAT-ACTIVATED MEMORY LOCKING MEANS

## BACKGROUND OF THE INVENTION

The present invention relates generally to electrical connector devices, and more particularly to means and methods for improving the rigidity and reliability of mechanically coupled electrical connectors.

It is an existing problem in the art of electrical connectors that difficulties arise in providing rigidity and reliability when mechanically coupled electrical connections are subject to stresses, such as shocks and vibrations, and/or are required to operate in severe environments presenting widely varying or extreme conditions. It will be appreicated that this problem is made more difficult where rapid coupling of connectors is a featured requirement.

## SUMMARY OF THE INVENTION

Accordingly, it is a primary object of the present invention to provide improved means and methods for significantly improving the rigidity and reliability of mechanically coupled electrical connectors.

Another object of the invention is to provide improved rigidity and reliability while still permitting rapid coupling of the electrical connectors.

A further object of the invention resides in the employment of a design for obtaining increased rigidity and reliability which also permits readily obtaining electrical safety connections between the coupling and connector members without requiring the special safety wiring normally provided for this purpose.

Still another object of the invention is to provide means and methods for materially increasing the rigidity of mechanically coupled connectors after coupling thereof in a conventional manner.

A still further object of the invention in accordance with the foregoing object is to provide externally visible means for indicating that the said materially increased rigidity has been provided for the coupled connectors.

Yet another object of the invention is to provide connector constructions in accordance with the foregoing objects which are relatively simple and economical.

The above objects are accomplished in preferred embodiments of the invention by connector constructions which, in a novel manner, incorporate and take advantage of a material having controllable mechanical memory properties. More specifically, this metallic alloy has the property that, after an object made of the alloy is set to an original shape at a predetermined elevated temperature, the alloy can then be deformed at a lower temperature into a desired intermediate shape. By application of moderate amounts of heat, the alloy can subsequently be returned to the original shape while exerting considerable force.

In particular preferred embodiments of the invention described herein, electrical connectors comprising a plug and receptacle are constructed and arranged to be mechanically coupled together using conventional screw or bayonet coupling means. In accordance with the present invention, each of these preferred electrical connectors also include a locking memory member made of a memoy alloy having the properties described above, and having specially chosen original and intermediate shapes. The conventional coupling of the plug and receptacle is accomplished while this locking memory member has its intermediate shape. Then, in order to increase the rigidity and reliability of the coupling, heat is applied to cause the locking memory member to return to its original shape, which original shape is chosen in conjunction with cooperating means provided on the plug and receptacle so as to materially increase the forces holding the plug and receptacle together.



In accordance with another feature of the invention, the locking memory member preferably also includes an indicating tab having intermediate and original shapes chosen so that an externally visible indication is provided for indicating that the memory member has been returned to its original shape.

In accordance with a further feature of the invention, the memory alloy employed for the locking memory member is chosen so that by the application of appropriate cooling, sufficient relaxation of the locking memory member toward its intermediate shape may be obtained to permit the plug and receptacle to be uncoupled when desired.

The specific nature of the invention as well as other objects, features, advantages and uses thereof will become apparent from the following description of preferred embodiments of the invention taken in conjunction with the accompanying drawings in which:

## BRIEF DESCRIPTION OF THE DRAWINGS

FIG. **1** is a longitudinal view with portions broken away of a first embodiment of the invention illustrating a screw-coupled electrical connector employing a locking memory member in accordance with the invention, the locking member being shown in the unactivated condition.

FIG. **2** is a front view of the locking memory member employed in the embodiment of FIG. **1**.

FIG. **3** is a cross-sectional view of the locking memory member of FIG. **2** taken along the lines **3—3** thereof.

FIG. **4** is a fragmentary cross-sectional view similar to FIG. **1** showing the electrical connector with the locking memory member in the activated condition.

FIG. **5** is a cross-sectional view similar to FIG. **3** showing the locking memory member in the activated condition. FIG. **6** is a longitudinal view with portions broken away of a second embodiment of the invention illustrating a bayonet-coupled electrical connector employing another form of locking memory member in accordance with the invention, the locking memory member being shown in the unactivated condition.

FIG. **7** is a front view of the locking member employed in the embodiment illustrated in FIG. **6**.

FIG. **8** is a cross-sectional view of the locking member of FIG. **7** taken along the lines **8—8** thereof.

FIG. **9** is a fragmentary cross-sectional view similar to FIG. **6** showing the locking memory member in the activated condition.

FIG. **10** is a cross-sectional view similar to FIG. **8** showing the locking memory member in the activated condition.

## DESCRIPTION OF PREFERRED EMBODIMENTS

Like designations represent like elements throughout the figures of the drawings.

Referring initially to FIG. **1**, reference numeral **10** generally designates a cylindrical electrical connector

comprising a plug **12** and receptacle **14** mechanically coupled together using a conventional screw-type outer coupling ring **16** rotatably captivated on the plug shell **18** and threadable on the receptacle shell **20.** As will become more evident later on herein, the primary feature of the present invention resides in the inclusion in the connector **10** of a locking memory member **25** which, when activated as illustrated in FIGS. **3** and **5,** serves to materially increase the rigidity and reliability of the coupling provided between the plug **12** and receptacle **14.**

In a conventional manner, the plug **12** and receptacle **14** include insulating bodies **22** and **24** respectively disposed within the plug and receptacle shells **18** and **20** and having respective mating contacts **26** and **28** provided therein, all as typically illustrated in FIG. **1.** It will be understood that although FIG. **1** shows only the one pair of mating contacts **26** and **28,** many more can be provided in a similar manner.

Also in a conventional manner, an O-ring **30** is provided in an appropriate groove **31** in the inner surface of the receptacle shell **20.** The O-ring **30** engages the outer surface of the plug shell **18** so as to provide sealing for the coupled connector.

Now considering the manner in which coupling is provided between the plug **12** and receptacle **14** in more detail, it will be understood from FIG. **1** that the right end of the outer coupling ring **16** (as viewed in FIG. **1**) is provided with interior threads **32** which permit the coupling ring **16** to be screwed onto mating threads **36** provided on the periphery of the receptacle shell **20.** To the left of these interior threads **32,** the coupling ring **16** is provided with an interior groove **34** which receives a resilient captivating washer **36** and together with a flange **38** provided on the plug shell **18** rotatably captivates the coupling ring **16** thereon.

As also shown in FIG. **1,** the left end of the coupling ring **16** additionally has a perpendicularly depending portion **40** providing an annular surface **42** spaced from an opposing annular surface **44** provided by the left shoulder of the plug shell flange **38,** thereby forming an annular cavity **46** between the coupling ring **16** and the plug shell **18.** It is in this annular cavity **46** between the opposing annular surfaces **42** and **44** that the locking memory member **25** is disposed in accordance with the invention.

Referring now to FIGS. **2** and **3** along with FIG. **1,** it will be understood that the memory locking member **25** may typically be provided in the form of a ring or washer with serrated outer surfaces **25*a*** and also advantageously including circumferentially spaced memory tabs **25**b extending therefrom. As pointed out previously herein, the memory locking member **25** is made of a material having controllable mechanical memory properties. In the preferred embodiments being considered herein, the memory material is preferably a metallic alloy comprising an equiatomic nickel-titanium intermetallic compound containing approximately 53 to 57 percent by weight of nickel with the balance titanium. This alloy is customarily referred to in the art as 55-Nitinol.

The mechanical memory properties of alloys such as 55-Nitinol are only partially understood in the art, and are believed to be a result of a reversible stress-induced, martensitic transformation. An original memory shape may be set into the alloy at an elevated temperature which is typically about 900°F for 55-Nitinol. This original shape will be retained after the alloy is cooled. The alloy may then be deformed to a desired intermediate shape. Return to the original shape may then be subsequently accomplished when desired by the application of moderate amounts of heat to bring the alloy to a predetermined transitional temperature range which may be varied by appropriate choice of the particular alloy composition. For 55-Nitinol, a transitional temperature range of −60°F to 300°F may be provided by appropriately changing the percentage of nickel and/or substituting cobalt for nickel on an atom-for-atom basis. The shape recovery temperature range is also dependent on the specific processing history of the alloy. During return of the alloy to its original shape, very considerable force can be exerted thereby so that much mechanical work can be accomplished. Further details concerning 55-Nitinol can be obtained from the article "What You Can Do With That 'Memory' Alloy", Materials Engineering, 70, pp. 28–31 (October 1969).

In the light of the above discussion of the properties of the type of memory alloy from which the locking memory member **25** is made, the particular original and intermediate shapes chosen for the locking memory member **25** will now be considered in more detail, the intermediate shape being illustrated in FIGS. **1–3** and the original shape being illustrated in FIGS. **4** and **5.** As illustrated in FIGS. **4** and **5,** the locking memory member **25** is typically set in accordance with the invention to an original shape having a slightly bowed cross-section with the four circumferentially spaced memory tabs **25*a*** being bent so as to extend radially therefrom as shown. Prior to assembly in the electrical connector, the locking memory member **25** is deformed into the intermediate shape illustrated in FIGS. **1–3,** whereby the cross-sectional width of the locking memory member **25** has been reduced by making it more triangular, and the memory tabs **25*b*** have been unbent to perpendicularly depend from the ring.

The height and width of the locking memory member **25** when in its intermediate shape are chosen in the preferred embodiment being considered so that the locking memory member **25** can readily be accommodated within the annular cavity **46** provided therefor (as illustrated in FIG. **1**) without interfering with the normal coupling of the receptacle **12** and plug **14** using the screw-type coupling ring **16.** As also illustrated in FIG. **1,** the coupling ring **16** is designated so as to provide sufficient clearance **48** to permit the memory tabs **25*b*** to extend beyond the ring **16** to an externally visible position.

When it is desired to lock the receptacle **14** and plug **12** in coupled engagement, sufficient heat is applied to bring the locking memory member **25** to its transitional temperature range for recovery of its original shape. As will be understood from FIGS. **4** and **5,** the original shape of the locking memory member **25** is such that a considerable force is exerted on the opposed annular surfaces **42** and **44** to thereby provide a highly rigid coupling of the plug **12** and receptacle **14.** In addition, by provision of the serrated outer surfaces **25*a*,** a serrated engagement is obtained between the locking memory member **25** and the opposed annular surfaces **42** and **44** so as to provide metal-to-metal bottoming which eliminates the need for safety wiring of the coupling ring **16.**

As will also be evident from FIGS. **4** and **5**, the return of the memory tabs **25***b* to their original shape will provide an externally visible indication that the locking memory member **25** has been activated.

A second embodiment of the present invention directed to a bayonet-coupled type of electrical connector will next be considered with reference to FIGS. **6–10**.

Referring initially to FIG. **6**, reference numeral **50** generally designates a cylindrical electrical connector comprising a receptacle **62** and plug **64** mechanically coupled together using a conventional bayonet-type of coupling ring **66** rotatably captivated on the plug shell **70** and engageable with a cooperating lug **69** provided on the receptacle shell **68**. In a conventional manner, the receptacle **62** and plug **64** include insulating bodies **72** and **74** respectively disposed within the plug and receptacle shells **68** and **70**, and having respective mating contacts **76** and **78** provided therein, all as typically illustrated in FIG. **6**. Although only a single pair of mating contacts **76** and **78** are shown in FIG. **6**, it will be understood that many more can be provided in a similar manner.

Also, in a conventional manner, an O-ring **80** is provided in an appropriate groove **81** of the receptacle shell **68** for engagement with the outer surface of the plug shell **70** in order to provide sealing for the coupled connector.

Now considering the coupling between the receptacle **62** and plug **64** of FIG. **6** in more detail, it will be understood that a helical interior groove **82** is provided at the left end of the bayonet-type coupling ring **66** (as viewed in FIG. **6**) for cooperative engagement with the lug **69** on the receptacle shell in a manner typical of bayonet-type coupling arrangements.

As will also be understood from FIG. **6**, the bayonet-type coupling ring **66** additionally provides an interior slot **84** for receiving a flange **86** projecting from the plug shell **70**, and for also receiving a locking memory member **90** having the general form of a wave washer and preferably made of 55-Nitinol so as to have the memory properties described previously. It will be understood that this wave washer type of locking memory member **90** is retained in the annular cavity **92** formed between the annular shoulder **94** of the receptacle flange **86** and an opposed annular surface **96** provided for the coupling ring **66** by an insert **98** threaded into the right end thereof. The locking memory member **90** serves to provide a basically similar memory locking function as described in the embodiment of FIG. **1**. In addition, the locking memory member **90**, in conjunction with the flange **86**, serves to rotatably captivate the bayonet-type coupling ring **66** on the plug shell **70**.

Referring now to FIGS. **7–10** along with FIG. **6**, the particular original and intermediate shapes chosen for the locking memory member **90** in the embodiment of FIG. **6** will be further considered, the intermediate shape being illustrated in FIGS. **6–8** and the original shape being illustrated in FIGS. **9** and **10**. As will best be understood from FIGS. **8** and **10**, the wave washer type of locking memory member **90** is typically set in accordance with the invention to an original shape (FIGS. **9** and **10**) having a width which is significantly reduced when the locking memory **90** is deformed to its intermediate shape (FIGS. **8** and **9**) for assembly in the connector. Also, as in the first described embodiment, the locking memory member **90** is advantageously provided with circumferentially spaced memory tabs **90** bent to extend radially when in their original shape (FIGS. **9** and **10**), while being unbent to extend perpendicularly when in their immediate shape (FIGS. **6–8**).

It will be evident from FIGS. **6–10**, that the width of the locking memory member **90** when in its intermediate shape is chosen so that it can be received within the annular cavity **92** without interferring with the normal coupling of the receptacle **62** and plug **64** using the bayonet-type coupling ring **66**, and while also being able to perform its function in captivating the coupling ring **66**. As will be seen in FIG. **6**, the insert **98** threaded to the coupling ring **66** is designed so as to permit the memory tabs **90**a to extend to an externally visible position.

When it is desired to lock the receptacle **62** and plug **64** in coupled engagement, sufficient heat is applied to bring the locking memory member **90** to its transitional temperature range for recovery of its original shape. As will be understood from FIGS. **9** and **10**, the original shape of the locking memory member is such that a considerable force is exerted on the opposed annular surfaces **94** and **96** to thereby provide a highly rigid coupling of the receptacle **62** and plug **64** as well as metal-to-metal bottoming.

As will also be evident from FIGS. **9** and **10**, the return of the memory tabs **90***a* to their original shape will provide an externally visible indication that the locking memory member **90** has been activated.

It is to be understood that an unlocking feature may additionally be provided for the described embodiments. This is advantageously achieved by choosing the composition and processing history of the alloy used for the memory locking members so that, after the receptacle and plug of the connector are locked by return of the locking memory member to its original shape, the application of approprite cooling will cause at least a partial return of the locking memory members to their intermediate shape so as to permit uncoupling of the receptacle and plug.

Obviously, many modifications and variations of the invention are possible in view of the above teachings. Therefore, it is to be understood that the invention is not limited in its application to the details of construction and arrangement of parts specifically described or illustrated, and that within the scope of the appended claims it may be practiced otherwise than as specifically described or illustrated.

The embodiments of the invention in which an exclusive property or privilege is claimed are defined as follows:

**1**. An electrical connector comprising:

a plug and receptacle,

said plug and receptacle each including a shell containing at least one insulated electrical contact,

coupling means for coupling said plug and receptacle together with their contacts in mating engagement,

said coupling means and one of said plug and receptacle providing surfaces which form a receiving cavity, and

heat-activatable locking means disposed in said receiving cavity and made of a material which changes shape in response to application of a predetermined amount of heat thereto,

said change of shape of said locking means being chosen to cause said locking means to bear against said surfaces of said receiving cavity in a manner which rigidly locks said plug and receptacle together in coupled engagement.

**2.** The invention in accordance with claim **1**, wherein said material is a metallic alloy material chosen so that the application of cooling thereto after return to its original shape will produce sufficient relaxation to permit uncoupling of said plug and receptacle.

**3.** An electrical connector comprising:

a plug and receptacle,

said plug and receptacle each including a shell containing at least one insulated electrical contact,

said plug and receptacle also including coupling means for coupling said plug and receptacle together with their contacts in mating engagement.

said coupling means and one of said plug and receptacle providing surfaces which form a receiving cavity, and

heat activatable locking means disposed in said receiving cavity and made of a metallic alloy material having the property that after being physically deformed into an intermediate shape is returnable to an original shape by the application of heat, said intermediate and original shapes being chosen so that the return of said locking means to said original shape rigidly locks said plug and receptacle together in coupled engagement.

**4.** The invention in accordance with claim **2**, wherein said metallic alloy material is 55-Nitinol.

**5.** The invention in accordance with claim **3**, wherein said metallic alloy material is further chosen so that the application of cooling thereto after return to its original shape will produce sufficient relaxation to permit uncoupling of said plug and receptacle.

**6.** The invention in accordance with claim **3**, wherein said coupling means includes an outer coupling ring captured on one of said plug and receptacle shells and capable of being coupled to the other shell.

**7.** The invention in accordance with claim **6**, wherein said coupling means is of the screw-thread type.

**8.** The invention in accordance with claim **6**, wherein said coupling means is of the bayonet type.

**9.** The invention in accordance with claim **1**, wherein said receiving cavity is of annular shape and wherein said locking means is of ring shape.

**10.** The invention in accordance with claim **2**, wherein the abutting surfaces of said cavity and locking means are serrated to provide for serrated engagement therebetween.

**11.** The invention in accordance with claim **1**, wherein said locking means includes indicating means which exhibits an externally visible change when said locking means is returned to its original shape.

**12.** The invention in accordance with claim **6**, wherein said locking means also serves to captivate said coupling ring on one of said shells.

**13.** A method of locking a plug and receptacle in rigid coupled engagement, said method comprising:

providing a plug and receptacle and coupling means therefor so that surface on said coupling means form a receiving cavity with surfaces of one of said plug and receptacle,

coupling said plug and receptacle with said coupling means with a locking member disposed in said receiving cavity, said locking member being made of a metallic alloy material having the property that after being physically deformed into an intermediate shape is returnable to an original shape by the application of heat; and

heating said locking member sufficiently to cause it to return to its original shape, said intermediate and original shapes being chosen so that the return of said locking member to said original shape causes said plug and receptacle to be locked together in rigid coupled engagement.

**14.** A method of locking a plug and receptacle in rigid coupled engagement followed by uncoupling thereof, said method comprising:

providing a plug and receptacle and coupling means therefor so that surfaces on said coupling means form a receiving cavity with surfaces of one of said plug and receptacle,

coupling said plug and receptacle with said coupling means with a locking member disposed in said receiving cavity, said locking member being made of a metallic alloy material having properties such that after being physically deformed into an intermediate shape is returnable to an original shape by the application of heat and which thereafter can be relaxed by the application of cooling,

heating said locking member sufficiently to cause it to return to its original shape, said intermediate and original shapes being chosen so that the return of said locking member to said original shape causes said plug and receptacle to be rigidly locked together in coupled engagement, and

uncoupling said plug and receptacle by cooling said locking member to cause sufficient relaxation thereof to permit said uncoupling.

* * * * *