United States Patent [19]

DiPaola et al.

[11] **3,797,412**

[45] **Mar. 19, 1974**

[54] **APPARATUS FOR DESTRUCTION OF DOCUMENTS**

[75] Inventors: **Vincent J. DiPaola,** Elkton; **Ralph H. Allen,** Churchville, both of Md.

[73] Assignee: **The United States of America as represented by the Secretary of the Army,** Washington, D.C.

[22] Filed: **Sept. 29, 1971**

[21] Appl. No.: **184,755**

[52] **U.S. Cl.** ..... **109/29,** 109/24, 110/18 R

[51] **Int. Cl.** **E05g 3/00**

[58] **Field of Search** 109/29, 25, 23, 33, 24, 109/26, 36, 37; 110/18; 312/236

[56] **References Cited**

UNITED STATES PATENTS

2,345,497	3/1944	Owen	110/18 R
3,598,063	8/1971	Kalkhof	110/18 R X
3,621,798	11/1971	Pedersen	110/18 R
3,638,591	2/1972	Lausmann	110/18 R
3,680,503	8/1972	Danielsson et al.	110/18 R

Primary Examiner—Dennis L. Taylor

Attorney, Agent, or Firm—Edward J. Kelly; Herbert Berl

[57] **ABSTRACT**

Apparatus and a method for fully destroying papers, packaged paper and other documents or combustibles in a safe.

4 Claims, 4 Drawing Figures

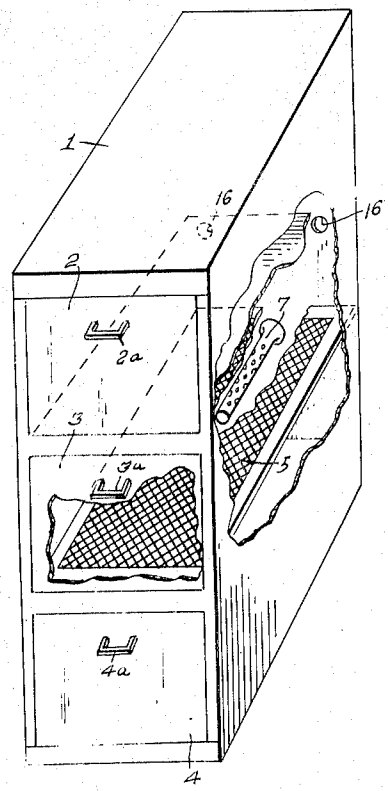

Fig. 1.

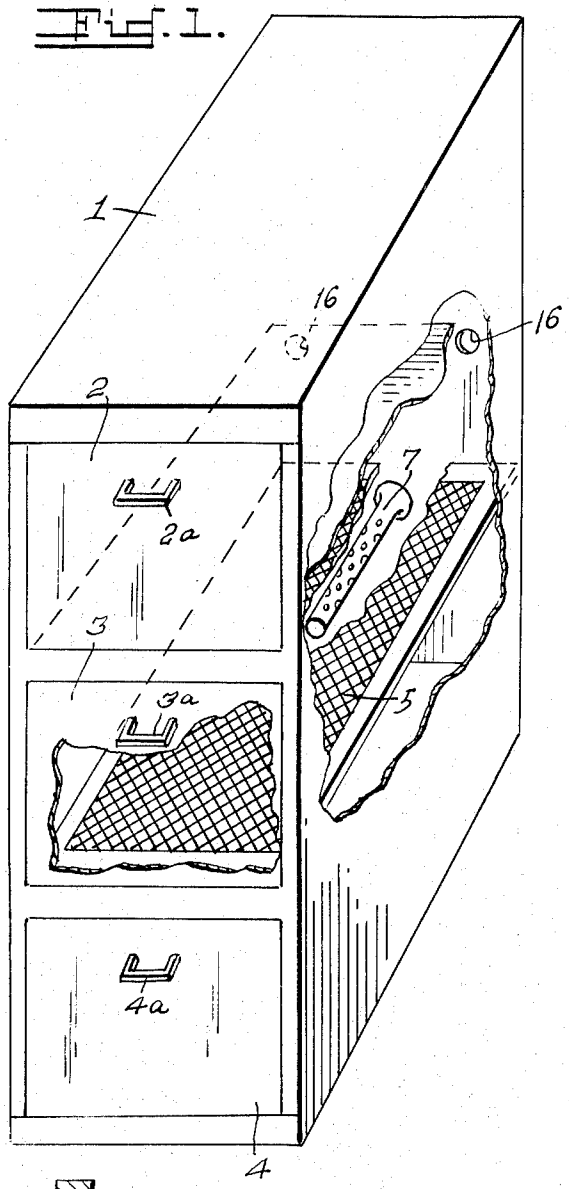

Fig. 3.

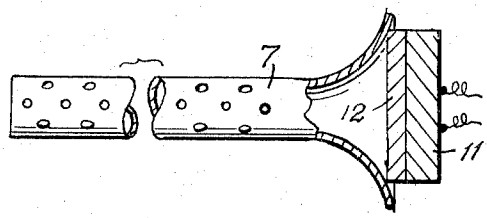

Fig. 4.

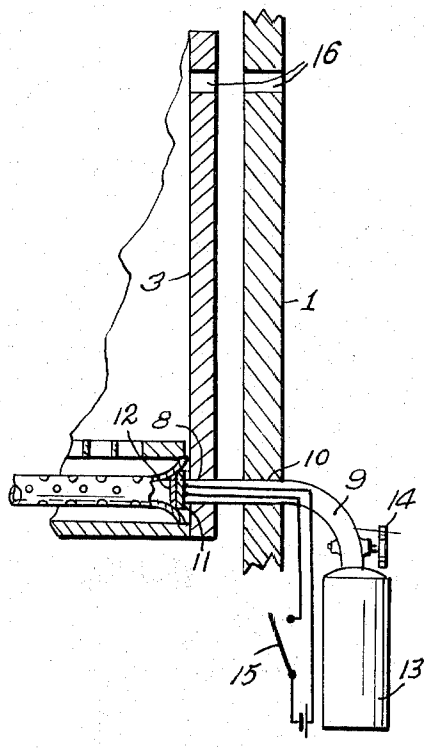

Fig. 2.

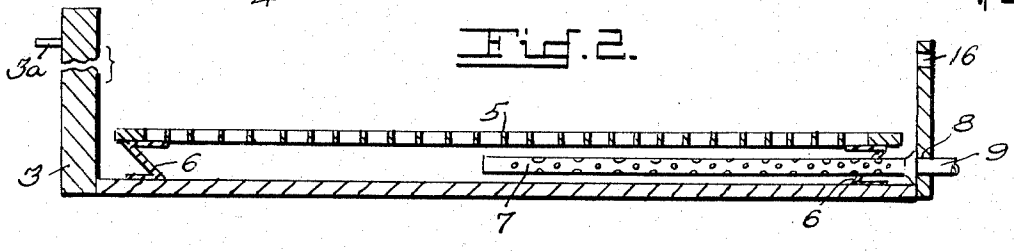

INVENTORS,

Vincent J. DiPaola
Ralph H. Allen

BY: Harry M. Saragovitz,
Edward J. Kelly +
Herbert Berl
ATTORNEYS.

APPARATUS FOR DESTRUCTION OF DOCUMENTS

STATEMENT OF GOVERNMENT INTEREST

The invention described herein may be manufactured, used, and licensed by or for the Government for governmental purposes without the payment to us of any royalty thereon.

BRIEF SUMMARY

Those in charge of classified or secret material sometimes must destroy combustible papers and documents as quickly as possible. Often these combustibles are stored in safes or cabinets. In emergency situations valuable time is required to unlock the safes. Sometimes combinations cannot be remembered, or the safes just seem to be impossible to open.

Even when the safes are open the material is slow to burn, books must be torn out page-by-page or shredded, and other bulky materials must be hand-fed piece-by-piece to the fire. They burn slowly and the ashes must be stirred and checked for unburned portions.

If a shredding machine is required it is expensive to buy, bulky to store, and expensive to maintain and check periodically to make sure it is in operating condition. Power failures could render the shredder inoperable.

With the present apparatus and method combustibles can be destroyed much more rapidly. It is not necessary to remove the combustibles from the safe or other cabinet or container. It is not necessary to hand-feed the combustibles to a fire. It is not necessary to store large shreading apparatus nearby. And, it is not necessary to fumble for keys or try to remember lock combinations to open safes that just do not seem to open in an emergency with everyone excited.

IN THE DRAWING

FIG. 1 diagrammatically illustrates part of the invention in one drawer of a file cabinet;

FIG. 2 illustrates a cross-sectional detail;

FIG. 3 illustrates an igniter and fusible plug;

FIG. 4 illustrates an oxygen bottle and igniter switch attached to the apparatus.

Cabinet **1** has drawers **2, 3** and **4** with handles **2***a*, **3***a* and **4***a*. Apparatus to assist in burning combustibles in drawer **3** is illustrated in detail. Similar apparatus could be incorporated for each drawer of the cabinet. A grid **5**, of steel screen, for example, is supported by spacers **6** and a perforated oxygen tube **7** extends forwardly from opening **8** at the rear of the drawer and is preferably carried by the drawer. An oxygen supply tube **9** extends through the rear of the cabinet at hole **10** and substantially contacts igniter **11** behind fusible plug **12**. Oxygen supply from pressurized bottle **13** is controlled by valve **14**. Switch **15** sets off igniter **11**.

In operation, one need only close igniter switch **15** and open oxygen valve **14**. Igniter **11** and fusible plug **12** disintegrate and admit flaming fragments of igniter **11** to tube **7** which quickly sets fire to combustibles in the cabinet drawer. Such combustibles, in the presence of oxygen, are quickly destroyed. The carbon dioxide and other products of combustion escape through cracks around the cabinet drawer. However, if the cabinet is air tight then appropriate vents may be provided as illustrated at **16** as will be obvious to one skilled in the art.

In actual tests of the present apparatus and method, it was found, as exemplary, that approximately 95 percent destruction was achieved in 15 minutes. (Obviously this period could be shortened by simple changes such as increasing the rate of oxygen flow, or other.)

By way of comparison, the time would be approximately doubled for a person to destroy the material by many of the conventional methods.

The container remains hot and jammed closed making it very difficult for anyone to open it and giving additional time for the combustibles to burn completely.

One person can set off a multitude of containers very quickly instead of spending valuable time hand-feeding to a fire, or shredding and burning.

The drawings illustrate the equipment somewhat in detail, but are not precisely to scale. In an actual installation, the oxygen tube and steel screen may be very close to the bottom, utilizing very little of the cabinet space. Indeed the center trough customarily found in the bottom of a safe drawer may be adequate for one or more oxygen tubes. Or, the oxygen may be introduced through holes in the steel bottom of the drawer, which rises above the center trough. Other details of design may be resorted to as will be obvious to those skilled in the art.

If desired, other gases, or liquids, could be introduced along with oxygen to facilitate the combustion process. However, such gases or liquids should remain outside of the container to conserve valuable space inside, to facilitate servicing and so on.

We claim:

1. In combination with a safe or storage container, means to introduce oxygen-bearing gas thereto, comprising a conduit leading from an external source of supply to a wall of said safe or container, passage means through said wall and leading to the storage space therein, and passage means adjacent to the bottom of a compartment in said safe or container to conduct and distribute said oxygen-bearing gas beneath the storage space to facilitate the burning of combustibles therein;

said apparatus further comprising ingiter means to initiate combustion, and a fusible plug adjacent to said igniter means, said igniter means acting to incapacitate said fusible plug upon ignition and to pass oxygen-bearing gas to said safe or container.

2. Apparatus as in claim **1** and a grid to support combustibles out of contact with the bottom of a compartment to permit free gaseous oxygen to flow beneath the combustibles to assist in the burning thereof.

3. Apparatus as in claim **2** wherein said passage means adjacent to the bottom of a compartment comprises a perforated conduit extending from said passage means through said wall into the space beneath said grid.

4. Apparatus as in claim **3** wherein said perforated conduit is carried by a drawer in said safe or container and is adapted to register with said passage means through said wall when the drawer is closed.

* * * * *