United States Patent [19]

Jaffa

[11] **3,796,153**

[45] **Mar. 12, 1974**

[54] **SQUEEGEE ASSEMBLY WITH LAST MOTION FLOOD ROLLER MOUNT**

[75] Inventor: **David Jaffa,** Fairlawn, N.J.

[73] Assignee: **Precision Screen Machines Inc.,** Hawthorne, N.J.

[22] Filed: **Feb. 25, 1972**

[21] Appl. No.: **229,402**

[52] **U.S. Cl.** **101/120,** 101/119

[51] **Int. Cl.** **B41l 13/04**

[58] **Field of Search** 101/116, 119, 120, 121, 101/122, 123; 401/218, 208

[56] **References Cited**

UNITED STATES PATENTS

2,571,064	10/1951	Schaefer	101/120
3,688,692	9/1972	Vasilantone	101/119
3,468,247	9/1969	Vasilantone	101/122
2,753,794	7/1956	Groak	101/120
3,198,109	8/1965	Dwyer et al.	101/119 X
3,232,224	2/1966	Kramer	101/120
3,557,690	1/1971	Voegelin	101/120
3,110,919	11/1963	Barnby	101/123 X

Primary Examiner—Robert E. Pulfrey
Assistant Examiner—R. E. Suter

[57] **ABSTRACT**

This disclosure is directed to a rotary printing screen assembly adapted for use on a screen printing machine. The assembly includes a rotary screen having an associated squeegee disposed within the rotary screen to force the color therethrough. A roller flood bar is operatively disposed within the screen which is free to rotate relative to the screen during a printing operation to effect a flood stroke along the internal surface of the screen in advance of the squeegee.

9 Claims, 5 Drawing Figures

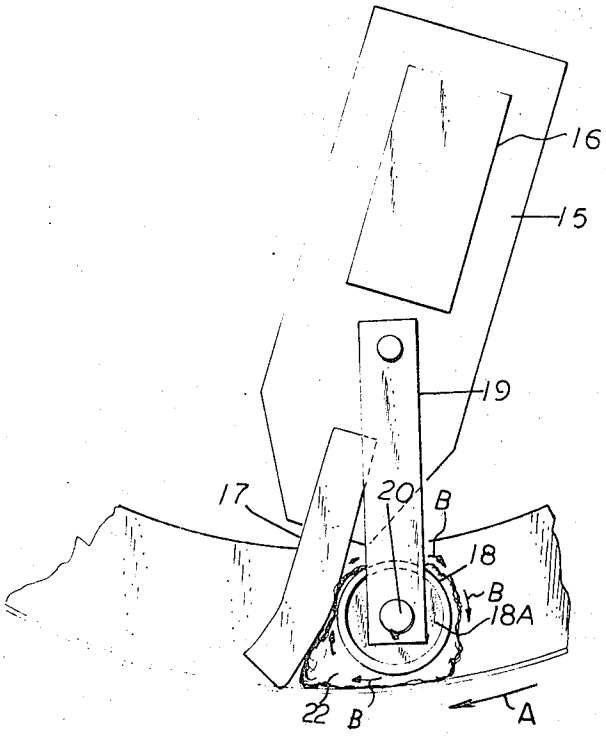

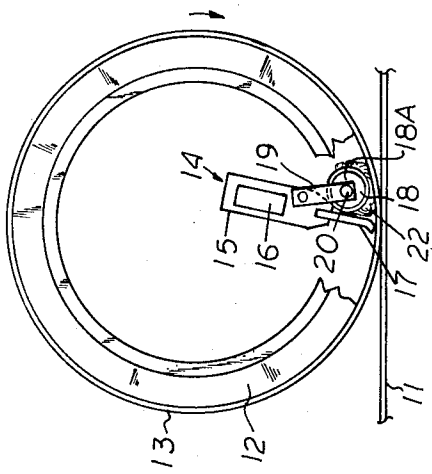

FIG. 3

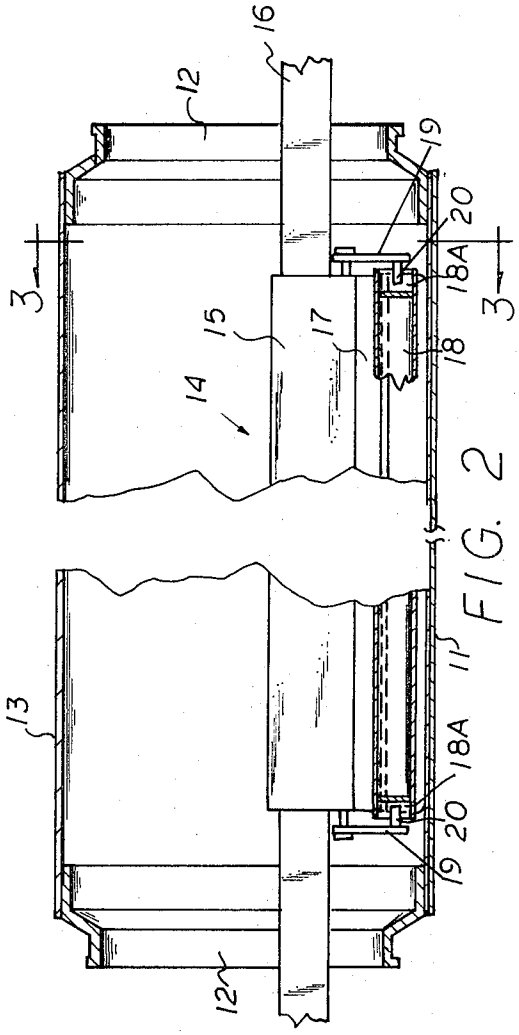

FIG. 2

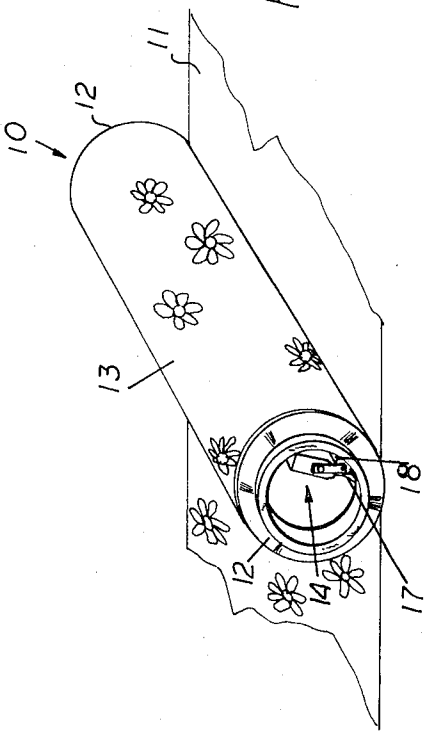

FIG. 1

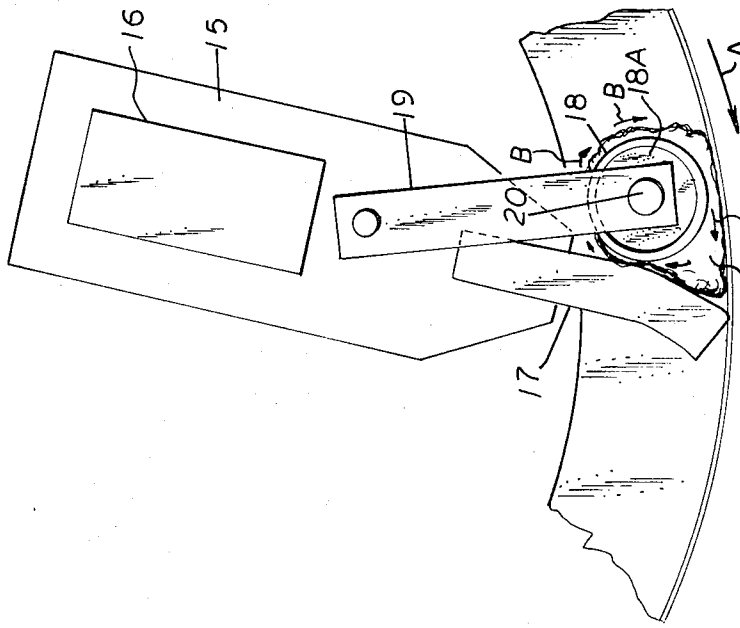

FIG. 4

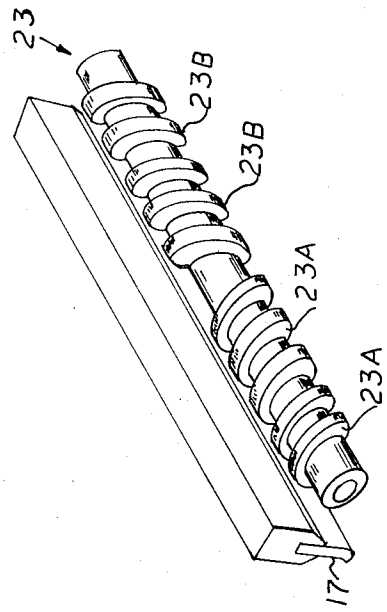

FIG. 5

SQUEEGEE ASSEMBLY WITH LAST MOTION FLOOD ROLLER MOUNT

PROBLEM AND PRIOR ART

Heretofore, in rotary screen printing machines, considerable difficulty has been encountered in effecting a flood stroke to assist the spreading of the ink or color material along the inner surface of a rotary screen prior to effecting the squeegee pass to force the color through the stencil portion of the screen. With prior known constructions it was imperative that a substantial mount of pressure be applied to the squeegee to insure the forcing of the color through the screen as a satisfactory means for effecting a flood stroke had not been heretofore feasible. Depending upon the nature of the material, the pressure would also have to be varied accordingly. However, the application of such pressures to insure the proper forcing of the color through the screen, without the assist of a flood stroke, greatly reduced the overall life of the screen; and further rendered the printing of certain materials, as for example, vinyls, difficult because of the large pressures needed to effect the printing thereof. Also with the prior known constructions the color or ink disposed within the rotary screen would tend to flow laterally and outwardly along the squeegee blade during a printing operation to result in the color or ink tending to accumulate along the end portions of the screen and thereby resulting in a non-uniform print.

OBJECTS

An object of this invention is to improve screen printing with a rotary screen by providing an arrangement by which a flooding of the screen with color is effected immediately in advance of the squeegee so that a minimal of squeegee pressure is required to force the color through the screen.

Another object is to provide an improved rotary screen printing assembly in which the tendency of the color to flow laterally outwardly along the squeegee toward the ends of the rotary screen during a printing operation is resisted to insure a more uniform distribution of the color along the length of the squeegee.

Another object of this invention is to provide an improved rotary printing screen having a roller disposed in the collor or ink and rendered freely rotatable relative to the screen to result in flooding the color along that portion of the screen immediately in advance of the squeegee.

Another object of this invention is to provide a rotary screen printing assembly in which a minimal amount of pressure is required to be applied between the squeegee and the screen for effecting the printing stroke.

SUMMARY OF INVENTION

The foregoing objects and other features and advantages of this invention are attained by a rotary printing screen assembly adapted for use on a screen printing machine which includes a cylindrical printing screen having a stencilled portion which is adapted to be rotatably mounted on the frame of a screen printing apparatus to rotate relative to a sheet of material being printed thereby. A squeegee is disposed within the cylindrical screen and it is suitably mounted for movement between an operative printing position and a raised inoperative non-printing position. Associated with the

squeegee and disposed in advance of the squeegee is a roller which is arranged to ride in the supply of ink or color and which is supported so as to be freely rotatable relative to the rotating screen during a printing operation. As the roller is resting in the color and is free to rotate relative thereto, little if any pressure is imparted to the screen by the rolling action of the roller during a printing operation. The roller skimming in the color as it rotates relative to the screen, tends to produce a hydraulic pressure which exerts a downward force on the color, which can be increased or decreased according to the speed of rotation of the rotary screen. In doing so the roller effects a flooding of that area of the screen immediately in advance of the squeegee, and the force or pressure with which the squeegee is otherwise required to bear against the screen is reduced to a minimum. By minimizing the pressure or force by which the squeegee is required to bear against the screen, the useful life of the screen is greatly enhanced.

To prevent or resist the tendency of the color to flow laterally outwardly along the length of the squeegee, the present construction contemplates the utilization of means formed on the roller in the form of oppositely disposed lands and grooves or helical convolutions which are inclined at an angle or in a direction which resists the lateral flow of the color outwardly along the blade. In so doing the spread of the link laterally along the printing blade in immediate advance thereof is maintained substantially uniform.

FEATURES

A feature of this invention resides in the utilization of a roller disposed immediately in advance of the squeegee blade which is rendered freely rotatable within the color as the rotary screen is activated to produce the printing stroke to result in a flooding of the color along that portion of the screen immediately ahead of the squeegee.

Another feature of this invention resides in the improvement of a flood roller which is rotatably journalled relative to the squeegee blade in a manner whereby a limited lost motion is provided between the blade and the roller as the blade and roller are moved between a printing and non-printing position.

Another feature of this invention resides in the provision of lands and grooves formed about the periphery of the roller disposed at an angle to resist the normal tendency of the color to flow laterally outward along the squeegee blade during a printing operation.

Another feature of this invention resides in the provision of an improved rotary screen assembly capable of a flooding of the screen area immediately in advance of the squeegee blade with color to facilitate the screen printing operation which is relatively simple in construction, can be readily fabricated and which is positive in operation.

Other features and advantages will become more readily apparent when considered in view of the drawings and specification in which:

FIG. 1 illustrates a fragmentary portion of a screen printing apparatus utilizing the improved rotary screen assembly of the present invention.

FIG. 2 is a longitudinal sectional view taken through the screen assembly of FIG. 1.

FIG. 3 is a cross-sectional view taken along line 3—3 on FIG. 2.

FIG. 4 is an enlarged, fragmentary, cross-sectional view of the screen assembly to illustrate the operation of the flooding roller.

FIG. 5, is a detailed perspective view of a modified construction of the flood roller.

Referring to the drawings, there is shown in FIG. 1 the improved rotary screen printing assembly 10 of the present invention as adapted to a rotary screen printing apparatus. It will be understood that the rotary screen assembly 10 is suitably supported on the bed or frame of a screen printing apparatus (not shown) in a manner to rotate relative to a piece of sheet material 11 which is being moved in rolling engagement therewith.

As best seen in FIG. 2, the rotary screen assembly 10 comprises a pair of annular end frame members 12—12 between which there is supported the cylindrical, stencilled screen 13.

Disposed within the rotary screen 13 is a squeegee means 14 consisting of a squeegee holder 15 which is suitably mounted on the frame of a screen printing machine for movement between a lowered operative or printing position and a raised inoperative, non-printing position. This is accomplished by connecting the holder 15 to a suitable cross-arm 16, which extends transversely of the machine (not shown) and which cross-arm 16 is operatively connected to actuating means, e. g. a piston and cylinder assembly (not shown) which is in circuit with suitably operating controls to effect the raising and lowering of the squeegee means and an associated flood means between a printing and non-printing position. Supported in the holder 15 is a squeegee blade 17 which in the printing position is arranged to effect engagement with the stencilled portion of the screen to force the color through the screen as the screen rotates.

In accordance with this invention, a flooding means is operatively associated with the squeegee assembly 14 to enhance the printing operation and to provide a means whereby the squeegee can effect the forcing of the color through the screen 13 with a minimum of pressure being applied thereto. As best seen in FIGS. 1-4 the flooding means comprises a roller 18 which is arranged to rotate relative to the rotation of the screen 13 during the printing operation. As is evident in FIGS. 1-4, a pair of opposed brackets 19—19 are pinned or pivotally connected to the squeegee holder 15. Each bracket 19—19 is provided with laterally extending or in-turned pin 20 which is adapted to be received in an end recess 18A—18A formed in the ends of the roller. In the illustrated form of the embodiment it will be noted that the diameter of the recesses 18A, 18A, is substantially larger than the diameter of pin 20 adapted to be received therein. The arrangement is such that the pins 20 function to maintain the roller 18 in a position between brackets 19—19 immediately in advance of the squeegee blade 17 so as to be freely rotatable relative to the rotation of the screen 13 during a screen printing operation. The flooding roller 18 is associated with the squeegee holder 15 and blade 17 so that the flood roller 18 will move between a raised and lowered position together with the raising and lowering of the squeegee blade. However, due to the relative differences between the diameter of the recess or bore 18A formed in the ends of the roller 18; and the diameter of the pin 20 adapted to be received therein; a limited degree of lost motion will occur between the raising of the squeegee blade 17 and the roller 18 in moving between a raised and lowered position. It is evident in FIGS. 1 and 2, that as the squeegee blade 17 is moved to its raised, inoperative, or non-printing position, the bracket 19 maintaining the roller in position will be raised accordingly. However, because of the large end recesses in the flood roller 18, the flood roller will not immediately rise with the squeegee blade until such time that the bracket pin 20 engages the upper peripheral portion of the recess 18A. The arrangement is such that during a printing operation, the squeegee assembly 14 is first raised off the printing screen at the end of a printing stroke before the roller 18 is lifted due to the lost motion which is built in as herein described. In lowering the squeegee assembly to a printing postion, the flood roller 18 will first make contact with the screen prior to contact occurring between the screen 13 and the squeegee blade 17.

With the printing screen rotating in a clockwise direction as indicated by arrow A, as seen in FIG. 4, during a printing operation, the flood roller 18, which is disposed in the pool of color or ink material 22, will likewise rotate in a clockwise direction as indicated by arrows B. As the roller 18 is freely rotatable relative to the screen 13, and as it is riding in the pool of color or ink 22 a minimum of pressure is being exerted on the screen 13 as the roller is virtually floating and rotating in the color. The rolling of the roller 18 in the color or ink 22 causes the color or ink 22 to churn or rotate in the same direction therewith. Thus the roller effects a flood stroke and tends to initiate the flow of color through the openings of the screen in advance of the squeegee 17. The squeegee which is following the action of the roller 18 completes the printing action by completing forcing the color through the screen as the screen rotates thereunder. As the screen is flooded prior to passing under the squeegee 17 a heavier deposit of ink or color is achieved to produce an improved print.

As indicated in FIG. 4 the flow of the color immediately in advance of the squeegee 17 is such that the roller developes a hydraulic pressure on color or ink force increases or decreases according to the speed of rotation of the screen. By varying the size or weight of the roller, the amount of color being forced through the screen by the squeegee can be controlled accordingly.

To resist the normal tendency of the color 22 to flow laterally outwardly along the edge of the blade 17 toward the open ends of the screen 13, the invention further contemplates a roller construction wherein means are provided to resist the normal tendency of the lateral flow of color. By resisting this lateral flow of color, a more uniform spread of the color is attained in advance of the squeegee. As best seen in FIG. 5, the resistance to lateral flow is attained by providing a modified flood roller 23 formed with a series of oppositely positioned lands and grooves or helical convolutions 23A, 23B formed in the respective end portions thereof.

As shown in FIG. 5 the grooves or convolutions as shown are inclined left and right about the circumference of the roller so that as the roller rotates the oppositely disposed lands and grooves 23A, 23B will tend to resist the outward lateral flow of color along the squeegee blade. In this manner a more uniform distribution of color longitudinally of the squeegee blade 17 in advance thereof is attained to result in a more uniform print along the entire length of the squeegee.

The lands and groove arrangement or convolutions 23A, 23B on the modified roller 23 of FIG. 5, do not interfere with the flooding of the color on the screen for the reason that the flood roller 23 is not actually in direct contact with the screen. The arrangement is such that the flood roller 23 will float in the color 22, that is the density or surface tension of the material or color 22 normally would prohibit the roller 23 from directly contacting the screen, and the tendency of the roller 23 to rotate forces the color 22 between the roller 23 and the squeegee 17. Consequently very little pressure is required on the part of the squeegee to push the color through the screen 13. For this reason a minimum of pressure is required to be imparted between the squeegee 17 and the screen 13 resulting in increasing the overall life of the screen.

With the arrangement described, the degree of pressure applied to the squeegee 17 can be utilized to control the density print, i.e., for making either a fine print or a heavy print.

In all other respects the operation and cooperative relationship of the modified roller construction 23 of FIG. 5 is similar to that described with respect to the roller bar of FIGS. 1–4. It will be understood that in either form the roller may be formed either as a solid unit or as a tubular member.

Because of the rolling action of the roller within the pool of color or ink 22, there is created a flooding of the rotary screen immediately in advance of the squeegee blade so that the amount of pressure otherwise required to be applied to the blade 17 can be substantially reduced. By thus minimizing the pressure between the squeegee blade 17 and the screen 13 during a printing operation, the overall life of the screen can be substantially prolonged.

While the foregoing invention has been described with respect to various embodiments thereof it will be readily understood and appreciated that variations and modifications may be made without departing from the spirit or scope of the invention.

What is claimed is:

1. A rotary screen printer comprising:

a rotary cylinder screen of circular cross section including a pair of spaced apart end frame members and a printing screen connected between said end members,

a squeegee means including a squeegee holder and a squeegee blade disposed within said cylinder screen for forcing the color through said screen as said cylinder rotates,

a roller disposed within said cylinder screen adjacent said squeegee blade,

said roller being spaced from said squeegee blade to define a wedge of color between the squeegee blade and the roller as said roller rotates during a printing operation,

means for rotatably supporting said roller in rolling relationship with said screen whereby said roller is free to rotate as said cylinder rotates to flood the screen with color in advance of said squeegee blade,

and said supporting means including a bracket means,

and complementary means on said bracket means and said roller for rotatably floating said roller in the color and for providing a positive predetermined lost motion in a generally radial direction for sequencing the lifting of said squeegee and of said screen in advance of the raising of said roller in moving between a printing and nonprinting position,

and means for moving said squeegee blade and associated roller between operative printing position and inoperative nonprinting position.

2. The invention as defined in claim 1 and including means formed on said roller to control the spread of color along the length of said roller.

3. The invention as defined in claim 2 wherein said latter means comprises a plurality of lands and grooves formed along the length of said roller whereby said lands and grooves disposed along the length of said roller at one end thereof are inclined toward the lands and grooves disposed along the other end of said roller to resist the flow of color toward said end frames during a screen printing operation.

4. The invention as defined in claim 1 wherein said complementary means includes an enlarged recess formed in the opposed ends of said roller, and pins connected to said bracket means to be received in the said recesses for positioning said roller between said bracket means for relative rotation.

5. A rotary screen printer comprising:

a rotary cylinder screen of circular cross section including a pair of spaced apart end frame members and a printing screen connected between said end members,

a squeegee means including a squeegee holder and a squeegee blade disposed within said cylinder screen for forcing the color through said screen as said cylinder screen rotates,

a roller disposed within said cylinder screen adjacent said squeegee blade,

means for rotatably supporting said roller whereby said roller is free to rotate as said cylinder screen rotates to flood said screen with color in advance of said squeegee blade,

means for moving said squeegee blade between operative printing position and inoperative non-printing position,

said roller supporting means includes bracket means connected to said squeegee holder,

complementary means formed on said bracket means and said roller for maintaining said roller adjacent to said squeegee blade and to provide for a positive amount of predetermined lost motion in a generally radial direction between said roller and said bracket means for effecting a relatively sequential raising and lowering of said squeegee blade and associated roller in moving between operative and inoperative positions,

said complementary means including a recess formed in the opposed ends of said roller,

and pins connected to said bracket means to be received in said recesses for positioning said roller between said bracket means for relative rotation,

the diameter of each of said recesses formed in the ends of said roller being larger than the diameter of the pin received therein so that the difference between the respective diameters defines positive limits of play therebetween to provide the relative lost motion between the squeegee blade and the roller in moving between said operative and inoperative positions.

6. The invention as defined in claim 5 wherein said roller includes oppositely arranged lands and grooves formed on the respective end portions thereof whereby the lands and grooves on one end portion are inclined toward the lands and grooves on the other end portion to control the distribution of color along the length of said roller.

7. A rotary printing screen assembly comprising:

a pair of annular end frame members,

a cylindrical printing screen having a stencilled portion supported between said end frames,

a squeegee holder disposed within said cylinder screen,

a squeegee blade supported in said holder,

said holder and blade supported therein being mounted for movement relative to the inner circumference of said screen between a printing and non-printing position,

a flood roller disposed within said screen adjacent to said blade,

means for supporting said flood roller on said holder,

said latter means including opposed brackets connected to said holder,

and complementary fastening means for securing said roller between said brackets whereby said roller is free to rotate relative to said screen during a printing operation,

and said complementary fastening means including a pin and enlarged recess for receiving said pin for producing a positive predetermined amount of limited lost motion between said roller and said brackets as said holder is moved to a non-printing position so that said squeegee is lifted off said screen in advance of the raising of said roller in moving between a printing and non-printing position.

8. The invention as defined in claim 7 and including means formed on said roller to resist the flow of color toward said end frame members during a printing operation.

9. The invention as defined in claim 8 wherein said latter means includes a series of circumscribing lands and grooves formed on the opposed end portions of the roller to resist the flow of color toward said end frame members.

* * * * *

UNITED STATES PATENT OFFICE
CERTIFICATE OF CORRECTION

Patent No. 3,796,153 Dated March 12,1974

Inventor(s) DAVID JAFFA

It is certified that error appears in the above-identified patent and that said Letters Patent are hereby corrected as shown below:

On the title page and in column 1, in the title, "LAST" should read -- LOST --.

Signed and sealed this 13th day of August 1974.

(SEAL)
Attest:

McCOY M. GIBSON, JR.
Attesting Officer

C. MARSHALL DANN
Commissioner of Patents

USCOMM-DC 60376-P69
☆ U.S. GOVERNMENT PRINTING OFFICE : 1969 O—366-334.