United States Patent [19]

Moore et al.

[11] **3,785,696**

[45] **Jan. 15, 1974**

[54] **ROLLOVER PROTECTIVE SYSTEMS FOR CONSTRUCTION VEHICLES**

[75] Inventors: **James C. Moore,** Clackamas; **Milton K. Leonard,** Lake Oswego, both of Oreg.

[73] Assignee: **Portland Wire & Iron Works,** Portland, Oreg.

[22] Filed: **Nov. 19, 1971**

[21] Appl. No.: **200,302**

[52] **U.S. Cl.** ..... **296/102,** 52/280, 287/189.36 R

[51] **Int. Cl.** B60j/7/24

[58] **Field of Search** ..... 296/102; 280/150 C; 287/189.36 R; 52/280

[56] **References Cited**

UNITED STATES PATENTS

3,632,134	1/1972	Babbitt	280/150 C
3,036,858	5/1962	Fingerut	296/102
3,455,598	7/1969	Tweedy	296/102

Primary Examiner—Robert R. Song
Attorney—James J. Hill

[57] **ABSTRACT**

Protection against injury to an operator of a construction vehicle in the event of rollover is provided by a system which may be adapted to many different types of construction vehicles, yet which will withstand the static tests accepted as the industry standard for simulating rollover. The system includes an integral superstructure including upright corner column members joined at their upper ends by longitudinal and transverse horizontal members. At each upper corner of the superstructure there is a special gusset member interconnecting the three coincident superstructure members. The gusset members effect a smooth transition of stress applied to one member to the other members of the superstructure with minimum deflection. The bases of the superstructure upright columns are anchored by means of vibration mounts to brackets which are attached to the vehicle frame.

7 Claims, 18 Drawing Figures

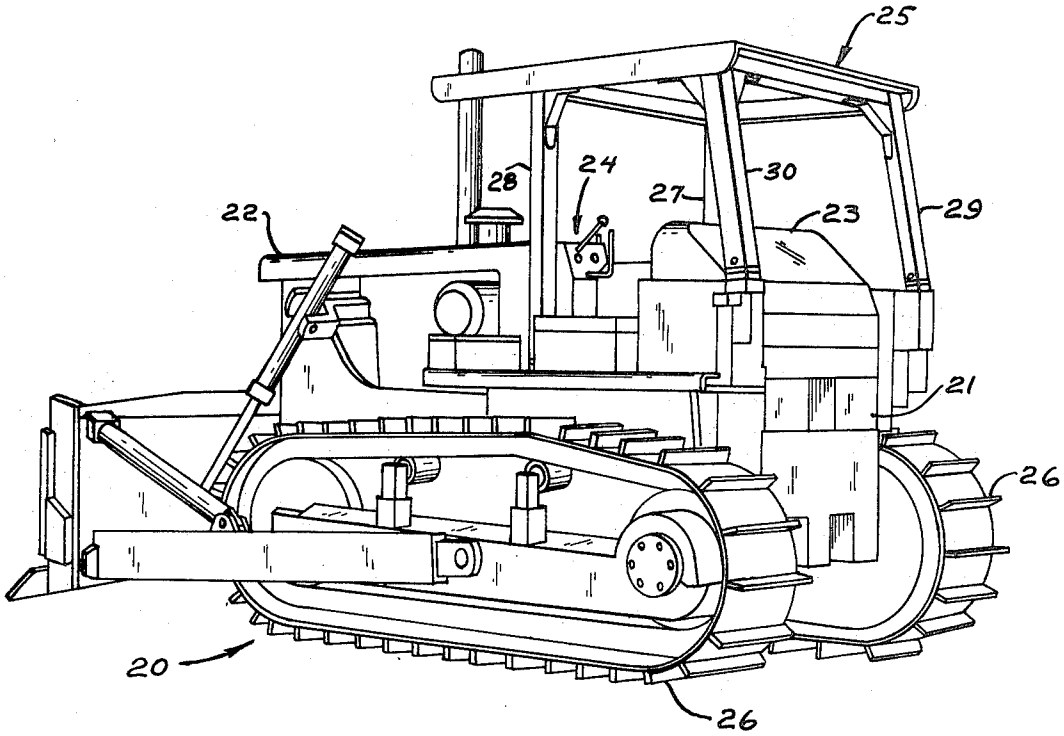

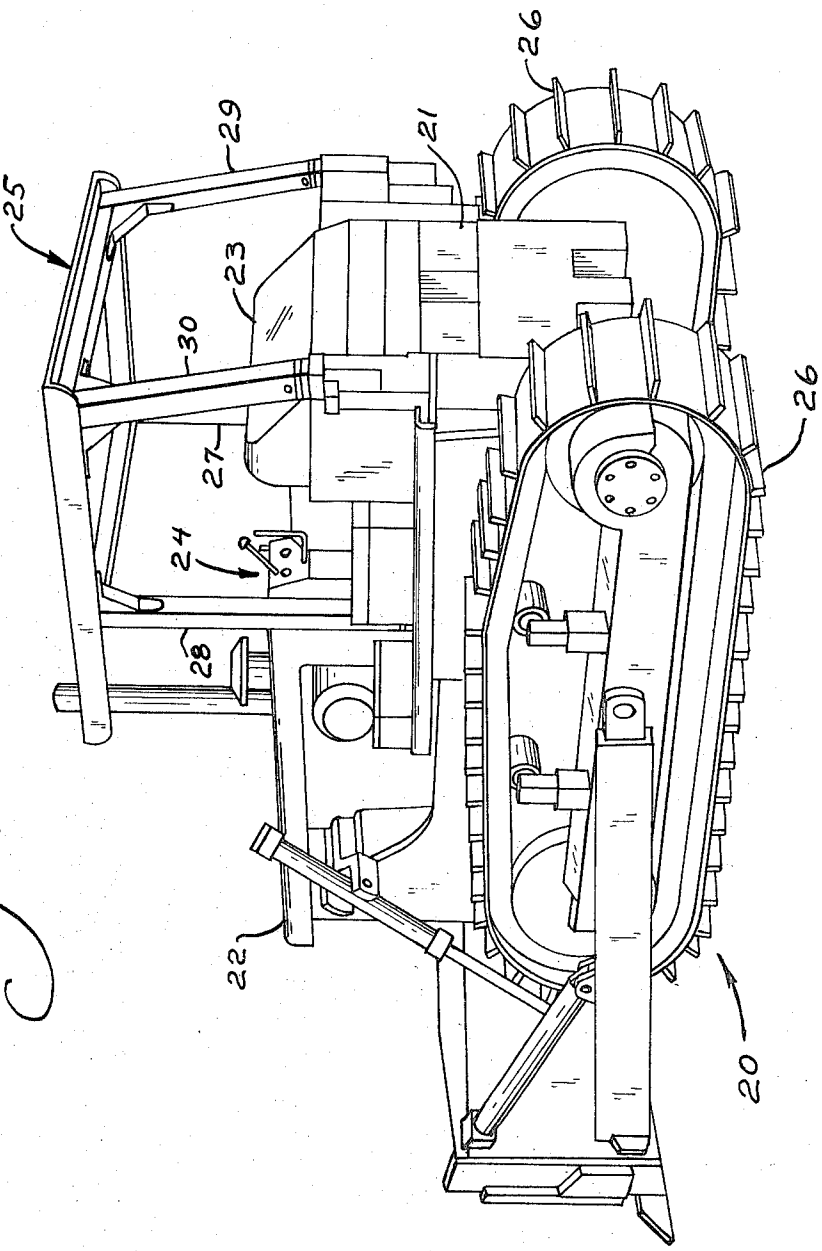

Fig. 1

Inventors:
James C. Moore
Milton H. Leonard
By Dawson, Tilton,
Fallon & Lungmus
Att'ys.

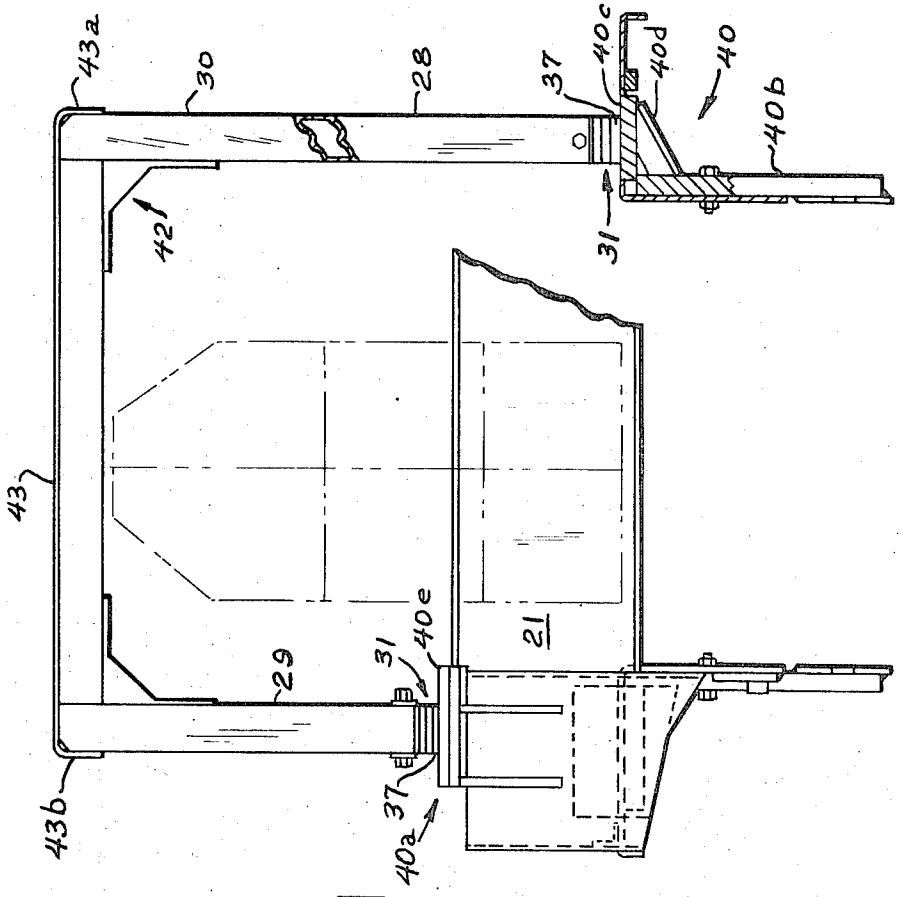

Fig. 3

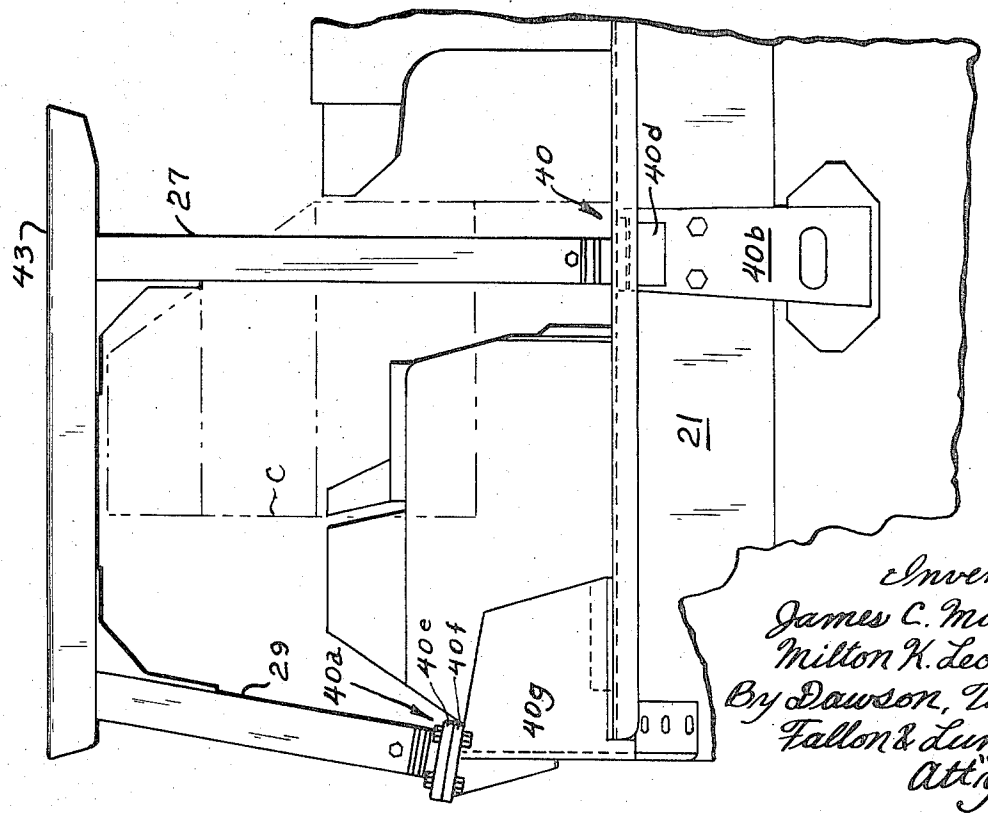

Fig. 2

Inventors:
James C. Moore
Milton K. Leonard
By Dawson, Tilton, Fallon & Lungmus
Att'ys.

Fig. 4

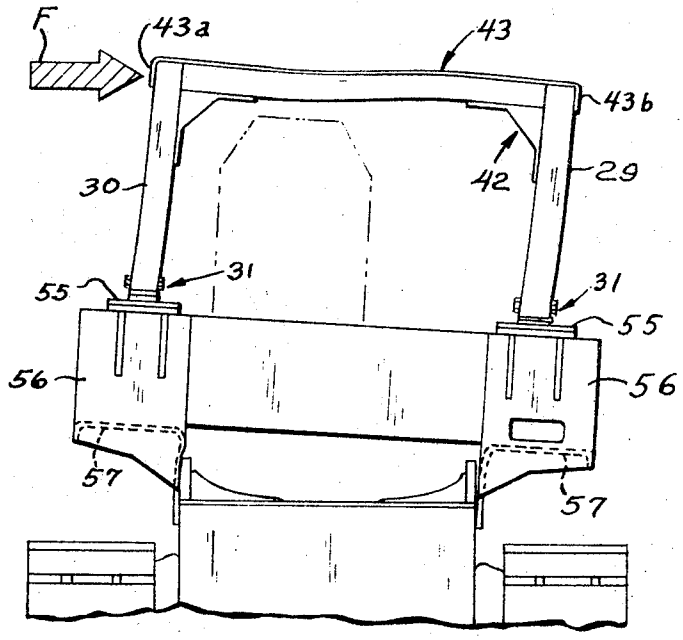

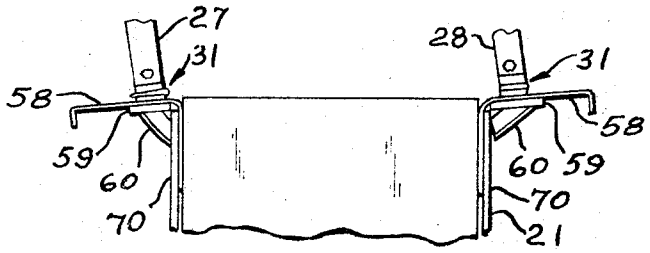

Fig. 4a

Inventors:
James C. Moore
Milton K. Leonard
By Dawson, Tilton,
Fallon & Lungmus
Att'ys

Fig. 5

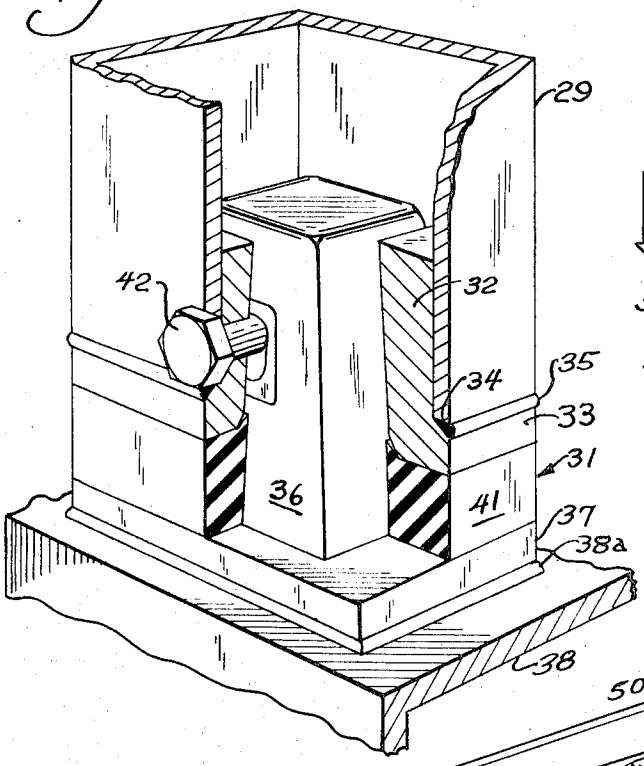

Fig. 6

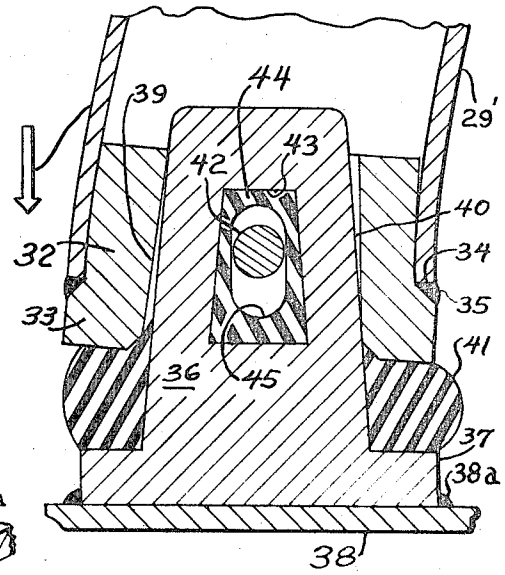

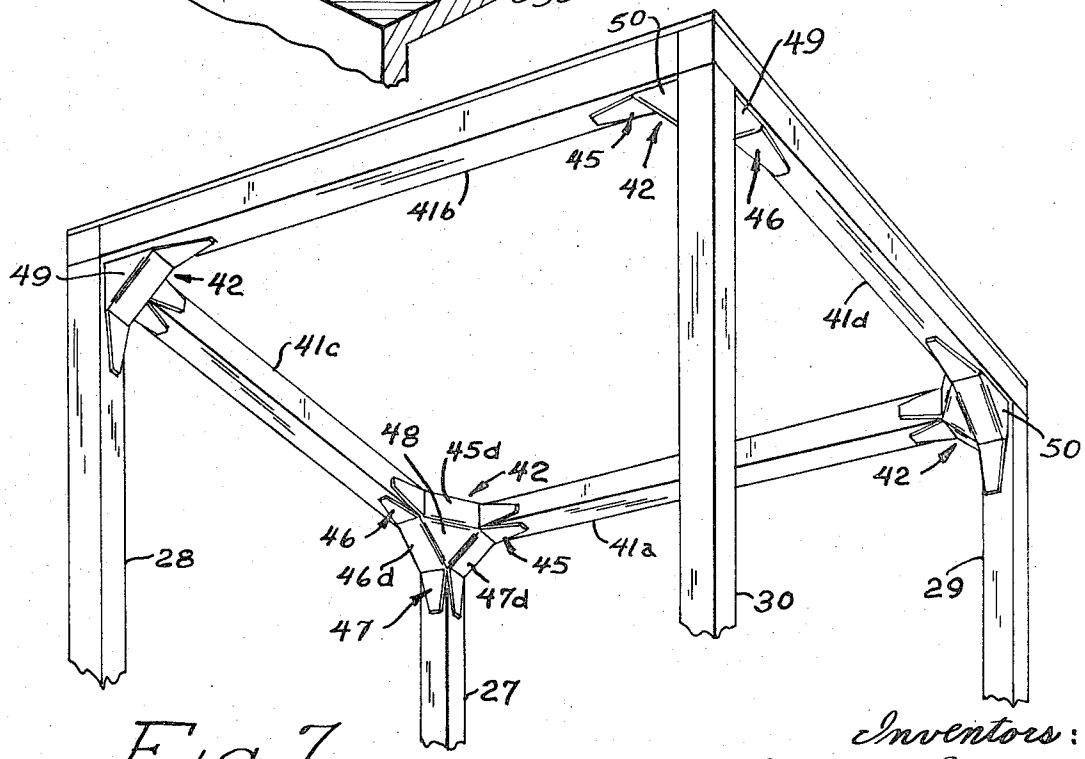

Fig. 7

Inventors:
James C. Moore
Milton K. Leonard
By Dawson, Tilton,
Fallon & Lungmus
Att'ys.

Fig. 8

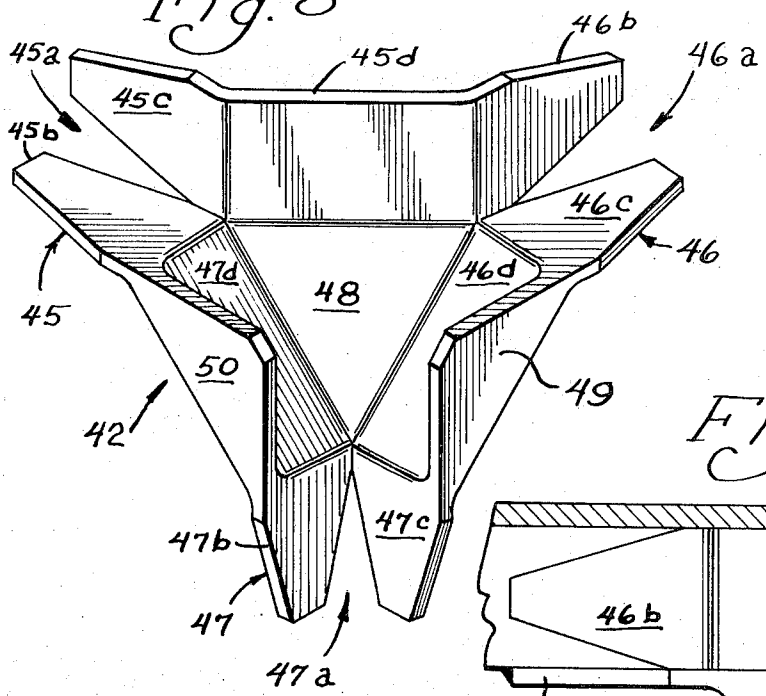

Fig. 9

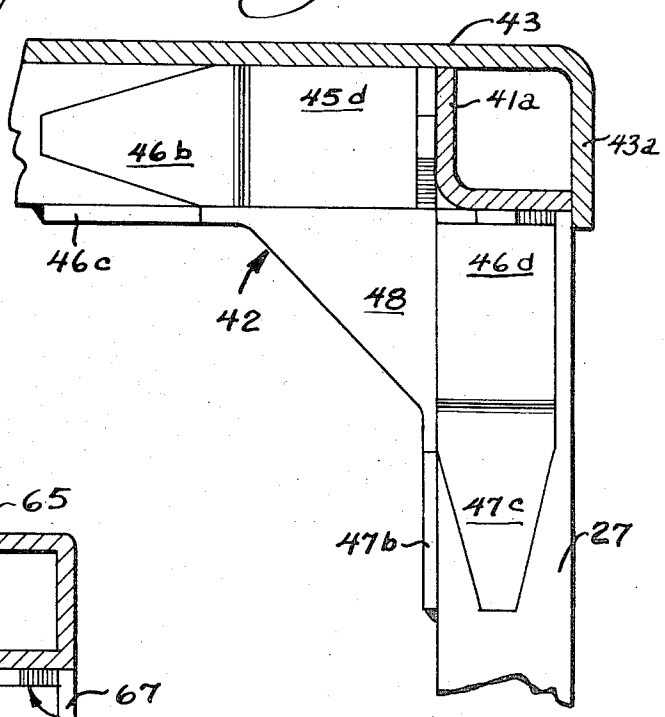

Fig. 10

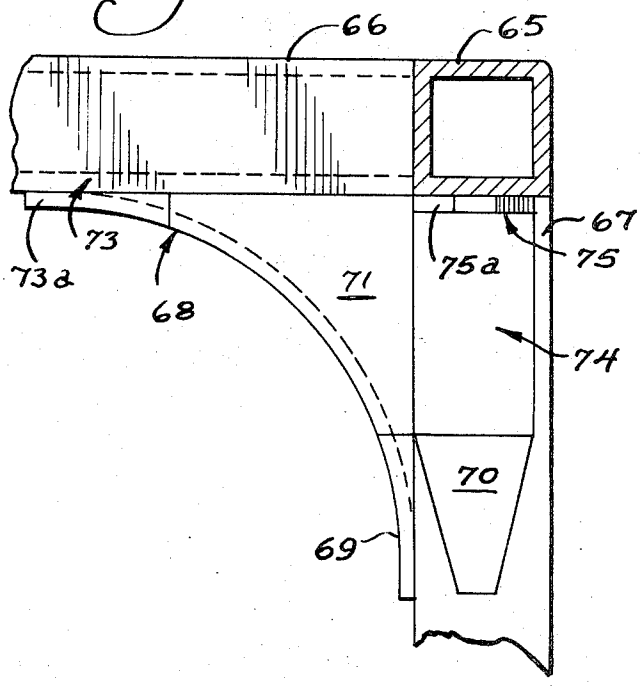

Inventors:
James C. Moore
Milton K. Leonard
By Dawson, Tilton,
Fallon & Lungmus
Att'ys.

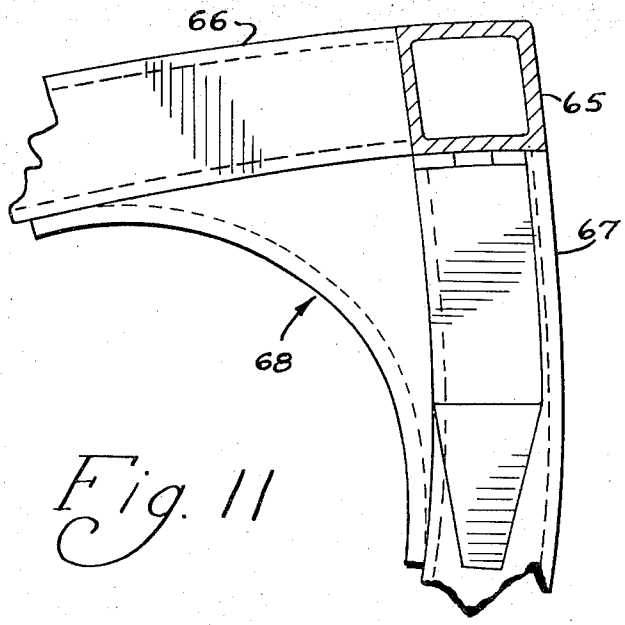

Fig. 11

Fig. 14

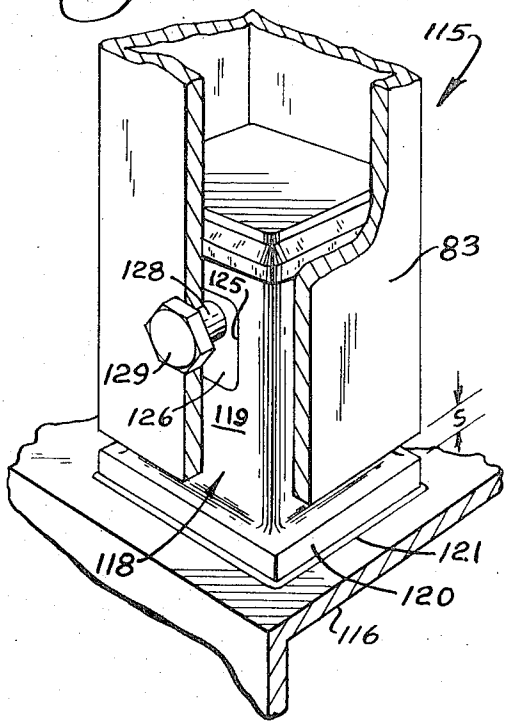

Fig. 13

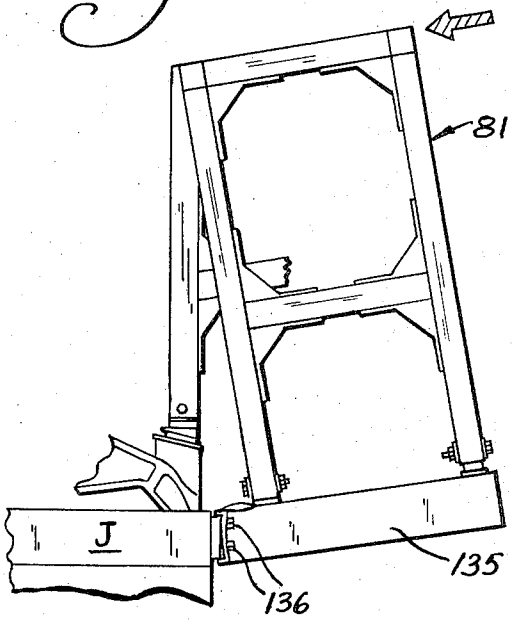

Fig. 15

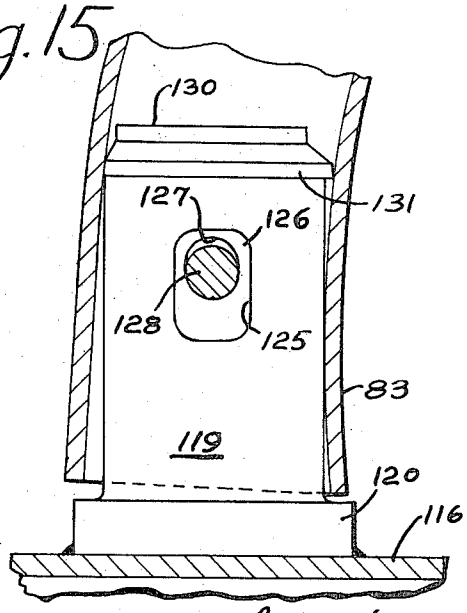

Inventors:
James C. Moore
Milton K. Leonard
By Dawson, Tilton, Fallon & Lungmus
Att'ys.

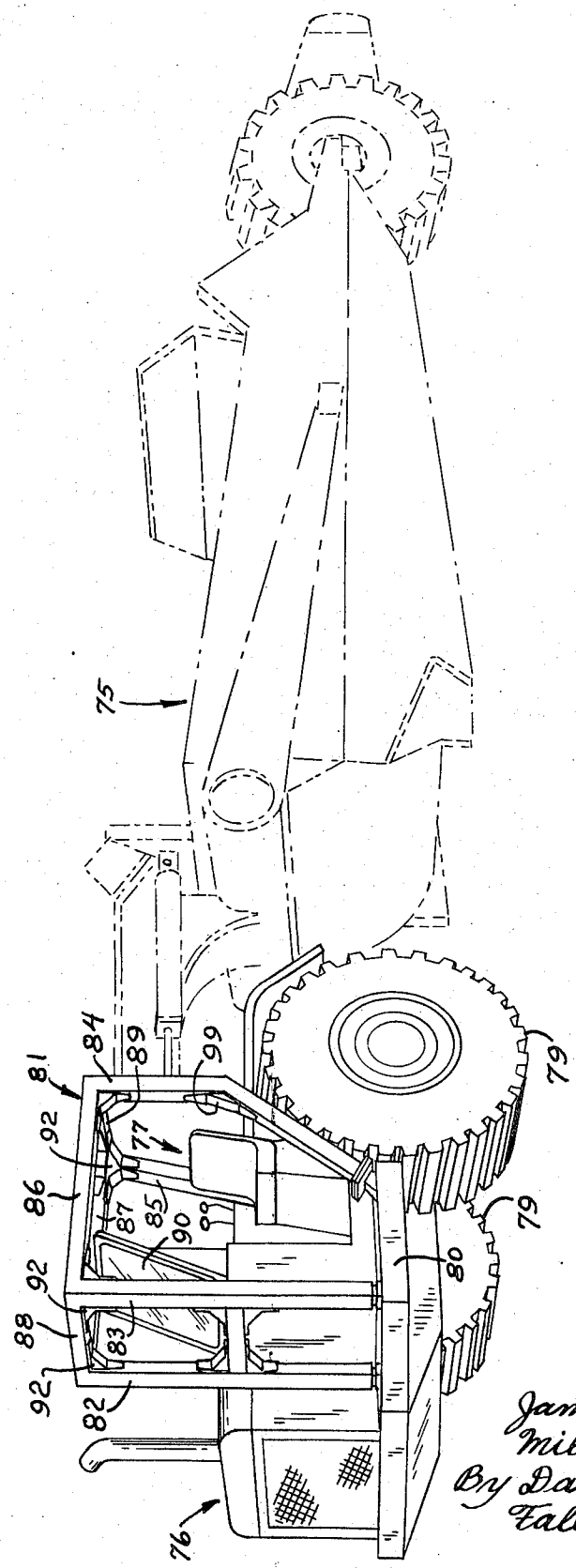

Fig. 12

Inventors:
James C. Moore
Milton H. Leonard
By Dawson, Tilton,
Fallon & Lungmus
Att'ys.

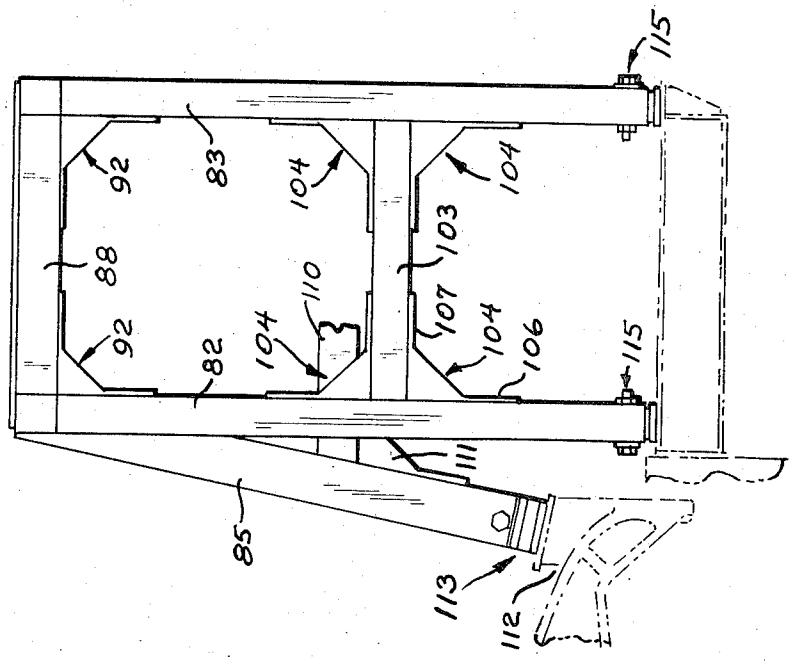

Fig. 17

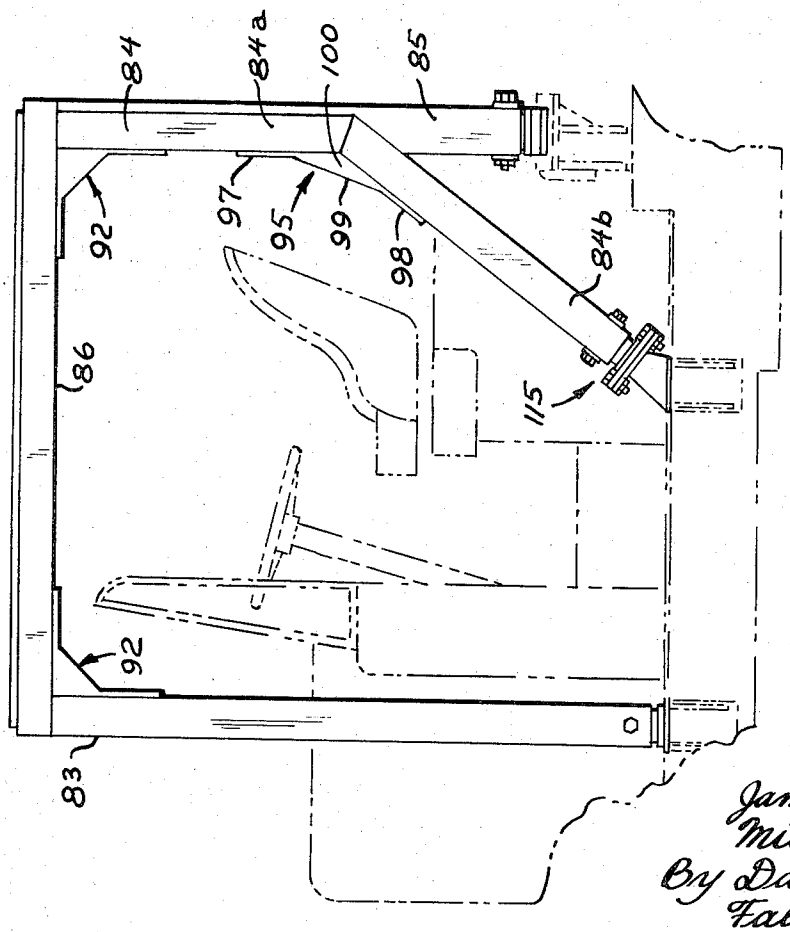

Fig. 16

Inventors:
James C. Moore
Milton K. Leonard
By Dawson, Tilton,
Fallon & Lungmus
Att'ys.

ROLLOVER PROTECTIVE SYSTEMS FOR CONSTRUCTION VEHICLES

BACKGROUND AND SUMMARY

Certain types of construction equipment such as loaders, tractors, graders, bulldozers, compactors and scrapers (collectively referred to as "tractors" herein) are operated under conditions wherein it is possible that the equipment will roll over. Such a condition is obviously extremely hazardous to the operator, and it has therefore become highly desirable to provide protection to the operator in the event of rollover. As an absolute minimum, any protective system should be of sufficient strength to support the weight of the vehicle and it preferably should be capable of withstanding even greater force.

More recently, minimum performance criteria have been developed by the Society for Automotive Engineers for rollover protective systems, and a test is used to simulate the applied stress during rollover. This test has become an industry standard for testing rollover protective systems. It is, of course, desirable to have a uniform test so that available systems may be compared and improved. One such test procedure for establishing whether a system exhibits the required performance criteria is described in the SAE technical report J320*a*.

It is desirable that a rollover protective system be designed such that it can be mounted to existing vehicles as well as to new vehicles without re-design of the basic vehicle frame, as this is not practical. In addition, it is desirable from the point of view of design and manufacturing economy that the same basic system approach, including interchangeable elements of the system, be used on as many of the different types of construction vehicles as is possible. Not only are the economies of mass production thereby realized, but even more importantly, as experience is gained with system operation for different types of vehicles, the system can be improved and thereby afforded greater protection to an operator.

It is, however, difficult to achieve a uniform system for rollover protection which is capable of being secured to the many different types of construction vehicles because of the widely varying situations encountered. For example, the operator is not always located in the same part of a vehicle, and the different vehicle designs include frames with stronger and weaker portions that may be located at the varying locations about the operator's position.

In the SAE test mentioned above, a hydraulic ram is positioned against the top of a rollover protective system which is mounted to a vehicle, and the ram is extended to apply a force at the top of the rollover protection system in a direction transverse of the intended direction of travel of the vehicle. Thus, a predetermined force simulating the stress applied to a vehicle during rollover is first applied. After this force is removed, a predetermined weight is deposited on top of the rollover protective system to simulate the applied stress if the vehicle were completely turned over. In addition, in order for a proposed system to be acceptable, the total deflection of the protective system must be such that no part of the rollover protective system will enter the so-called "critical" zone. The critical zone is an imaginary volume in which the 95th percentile man (when ranked in increasing size) outfitted in artic clothing so as to take up a maximum space, would occupy. More information concerning the critical zone may be found in SAE Technical Report J397.

The rollover protection system of the instant invention includes an integral superstructure formed from upright corner column members joined at their upper ends by longitudinal and transverse horizontal members. At each upper corner of the superstructure, a novel gusset member interconnects the three coincident superstructure members in a manner such that stress applied to any one of these members will be transferred to the others under smooth transition to minimize buckling. The bases of the superstructure upright column members are anchored by means of vibration mounts or rigid connections to brackets which are attached to the vehicle frame. The interaction of the superstructure, mounts, brackets, and vehicle frame to resist deflection during the SAE test or actual rollover is a very important aspect of the present system. All elements of the system cooperate to transfer stresses to the vehicle frame in a smooth transition to protect against failure of any component whether in normal operation or in the event of an accident.

The upright column members of the superstructure are placed outside of the corners of the critical zone and thereby leave an open field of vision for the operator in the intended direction of travel of the vehicle. Further, the superstructures are adapted so that panels may be mounted to it and thereby fully enclose the operator's station and protect the operator against harsh environments, as in U.S. Pat. No. 3,572,819.

Another advantage of the instant inventive system is that the same basic elements may be used for a number of different vehicle types, each having different frames, and yet it will be assured that the rollover protective system will pass the above-mentioned SAE test without intrusion of the superstructure into the critical zone. That is, the present invention permits a designer to consider the various parameters of each individual vehicle type (such as the strength of the framework the protective system is to be mounted on, the availability of space, the strength of the brackets attached to the vehicle framework and the strength of the roll bars themselves) and to design a system from a limited number of basic elements which are interchangeable between systems wherein the applied simulated rollover stress will be transmitted in smooth transitions to the strongest part of the vehicle frame with a minimum of deflection of the superstructure.

Other features and advantages of the present invention will be apparent to persons skilled in the art from the following detailed description of alternative embodiments wherein identical reference numerals will refer to like parts in the various views.

THE DRAWING

FIG. 1 is a rear perspective view of a crawler tractor equipped with a rollover protective system, according to the present invention;

FIG. 2 is a side elevational view of the rollover protective system of FIG. 1;

FIG. 3 is a rear elevational view of the rollover protective system of FIG. 1;

FIG. 4 is a fragmentary rear view of the tractor of FIG. 1 showing the rollover protective system after stress;

FIG. 4*a* is a close-up rear view of the front mounts for the rollover protective system after stress has been applied.

FIG. 5 is an enlarged fragmentary perspective view, partially broken away, of a mount for the rollover protective system;

FIG. 6 is a vertical sectional view of the mount of FIG. 5 showing the associated column in a deformed state;

FIG. 7 is a fragmentary perspective view of the rollover protective system as viewed from below and showing the gusset means which interconnect the various columns and beams;

FIG. 8 is a perspective view of the inside of one of the gusset means of FIG. 7;

FIG. 9 is a fragmentary vertical sectional view of one upper corner of the rollover protective system;

FIG. 10 is a view similar to FIG. 9 but of a modified form of structure utilizing tubular as contrasted to formed beams and a modified form of gusset;

FIG. 11 is a view similar to FIG. 10 but showing various elements in the condition assumed under stress;

FIG. 12 is a front perspective view of a scraper equipped with the inventive rollover protective system;

FIG. 13 is a front elevation view of the rollover protective system of FIG. 12 under stress;

FIG. 14 is an enlarged fragmentary perspective view, partially broken away of one type of mount for the rollover protective system of FIGS. 12 and 13;

FIG. 15 is a vertical sectional view of the mount of FIG. 14 but in the condition assumed under stress;

FIG. 16 is a side elevational view of the rollover protective system of FIG. 15; and

FIG. 17 is a front and rear elevational view of the rollover protective system of FIG. 12.

DETAILED DESCRIPTION

Referring now to FIG. 1, reference numeral 20 generally designates a crawler tractor equipped with the rollover protective system of the present invention. As already indicated, the invention has application to a wide variety of construction vehicles. For convenience of reference, we have referred to such equipment as construction vehicles or simply "tractors" because particular emphasis has been placed on the safety of operators of graders, scrapers, haulers, and tractors as well as those pieces of self-propelled equipment which are used in allied industries such as logging, mining, material handling, and the like. It will be appreciated therefore that the invention relates in its broader aspects to rollover protective systems, and it is not limited to use with any particular type of working vehicle.

The tractor 20 is equipped with a chassis 21 supporting an engine 22, operator's station or seat 23 and controls 24. The chassis or frame 21 also supports the inventive super-structure generally designated 25 and the entire piece of equipment is propelled by crawlers designated 26. It will be noted that the operator's seat 23 is completely circumscribed by the perimeter of the superstructure 25 and further, the superstructure 25 is so arranged and constructed so that under extreme stress, no portion thereof enters the critical zone occupied by the operator and described above.

The superstructure 25 includes four upright columns or legs denoted respectively 27–30 which are also seen in FIGS. 2 and 3. The front (i.e., in the direction of forward vehicle travel) legs are designated by the numerals 27 and 28 for the right and left legs respectively. The rear legs are designated 29 for the rear right leg and 30 for the rear left leg. Each of the columns 27–30 may be a tubular column of generally square cross section which, for most vehicles can be either 4 × 4 inches or 5 × 5 inches with the wall thickness being about 3/8″. Each of the legs or column members 27–30 are attached at their bases to the frame 21.

Each column 27-30 is connected to the frame 21 through mounting means generally designated 31 and which can be seen in FIGS. 5 and 6 relative to the column 29. The general arrangement and additional details of the mounting means can be seen in co-owned U.S. Pat. No. 3,560,019.

In FIGS. 5 and 6 (the column being under lateral stress and designated 29 in the latter), the mounting means 31 includes a sleeve 32 which is equipped with a perimetrically enlarged bottom flange 33 providing a shoulder 34. The column 29 is received over the upper portion of the sleeve 32 and is secured against the shoulder 34 as by a weld at 35.

Extending upwardly from the base 21 is a bayonet mount 36 equipped with an enlarged flanged base 37. The base 37 is secured to a bracket 38 by welding as at 38*a*. The bracket 38 will be described in greater detail presently. The sleeve 32 has a vertically extending channel 39 which is defined by four walls which are inwardly inclined at their upper ends. The walls of the bayonet mount 36 are correspondingly tapered as at the portion designated 40 in FIG. 6.

A cushioning member 41 of rubber or other suitably resilient material extends around the mount 36 above the flange 37, and is interposed between the base flange 33 of the sleeve 32 and the flanged base 37 of the bayonet mount 36.

The sleeve 32 (and hence the column 29) is secured to the bayonet mount 36 by means of a locking element 42. The element 42 extends through aligned passages in the sleeve 32 and the column 29 and through a vertically elongated slot 43 in the bayonet mount 37. The slot 43 is equipped with a lining 44 of rubber or similar resilient material also slotted as at 45.

As illustrated in FIGS. 2 and 3, the columns 27–30 of the superstructure 25 have their bases securely attached to the frame 21 by means of brackets, the forward brackets being designated by reference numeral 40 and the rear brackets being designated 40*a*. It is considered one of the primary advantages of the present invention that the same elements may be used to achieve a superstructure which will pass the SAE test and thereby achieve the economies of interchangeable parts, while adapting the system to vehicles of different types. For example, in the crawler illustrated the chassis or frame 21 is equipped with heavy longitudinal side frames extending along either side of the operator's station, and, therefore, in this construction, it is desirable to secure the superstructure 25 to these longitudinal beams. Other vehicle types may have stronger frames at different locations, thereby requiring slightly different brackets, but nevertheless enabling the use of the same general configuration of superstructure being described. In the case of the front columns 27 and 28, the bracket 40 includes a vertically elongated plate 40*b* bolted to the frame 21 and including an outwardly extending horizontal pedestal 40 *c* (see FIG. 3), the lower side of which is braced against the vertical plate 40*b* by means of a brace 40*d*. Thus, the base flange 37 of the

bayonet mount **36** is welded to the top surface of the pedestal **40***c*.

The base portions of rear columns **29** and **30** are connected to the frame **21** by similar brackets generally designated **40***a* in FIG. **2**. In this instance, a pedestal **40***e* receives the base flange **37** of the bayonet mount **36**, and this pedestal **40***e* is bolted to a similar plate **40***f* which, in turn, is welded to a vertical plate **40***g* which is secured to the longitudinal beams of the frame **21**.

The columns **27–30** are connected at their upper ends by four horizontal beams, two of which are extended longitudinally of the vehicle and are designated **41***a* and **41***b* in FIG. **7**, interconnecting respectively the tops of the beams **27, 29** and **28, 30**. There are also two transverse beams designated respectively **41***c* and **41***d* in FIG. **7**. At each upper corner of the superstructure, an upright column, a longitudinal beam and a horizontal beam are connected together into an integral, unitary junction by means of corner gussets, generally designated **42** which can be seen in perspective in FIG. **7** from beneath the superstructure and in FIG. **8** from a position above the gusset with the gusset not attached to the superstructure.

Each of the corner gussets **42** as seen in FIG. **7** interconnects an upright column, a longitudinal beam and a transverse beam of the superstructure.

In plan view, the superstructure top for the embodiments of FIGS. **1–7** is substantially square, and a canopy plate **43** including depending side flanges **43***a* and **43***b* overlies the longitudinal beams **41***a* and **41***b*.

For the embodiment of FIGS. **1–3**, we have found it advantageous to incline the rear columns **29** and **30** (see particularly FIG. **2**). In the illustration given, the inclination is of the order of **15** degrees from the vertical. Although this inclination is not critical, it is useful in transferring stress to the strongest portion of the vehicle frame in certain instances. This example further illustrates the flexibility of the inventive system in drawing the load to the strongest part of the frame for a particular vehicle through the use of the shortened rear columns **29** and **30** which cause the rear portion of the superstructure to be stiffer and hereby draw the load to the vehicle at locations just behind the operator's station where the frame is best able to withstand the load for this type of vehicle.

The showing in FIGS. **4** and **4***a* is a superstructure suitable for use with a Caterpillar C9G crawler tractor wherein identical reference numerals refer to like elements for the embodiment of FIGS. **1–3**. The embodiment of FIGS. **4** and **4***a*, however, has been stressed, and the results will be discussed below.

The critical zone is diagrammatically illustrated in FIGS. **2** and **3** by the chain line C.

Turning now to the corner gussets **42**, each gusset includes three struts, designated **45, 46** and **47** in FIG. **8**. Each of the struts **45–47** can be seen to define a channel, denoted respectively **45***a*, **46***a* and **47***a*. Each channel is defined on two adjacent sides by tabs, denoted **45***b*, **45***c*, **46***b*, **46***c*, **47***b* and **47***c*.

The gusset **42**, as illustrated, is a solid, integral piece, preferably made according to conventional metal-forming techniques from an integral piece of metal for strength and integrity. Thus, the tabs **45***c* and **46***b* are joined by means of a connecting brace **45***d*. Similarly, the tabs **46***c* and **47***c* are connected by a brace **46***d* and the tabs **45***b* and **47***b* are connected by a brace **47***d*. The braces **45***d*, **46***d* and **47***d*, are, in turn, connected together by means of a triangular median plate **48**. The longitudinal edges of the braces **46***d* and **47***d* which are not joined to the plate **48** are provided with triangular web portions **49** and **50** to provide additional support between the upstanding column member and the transverse and longitudinal beams connected by the gusset **42**. The axes of the three channels **45***a*, **46***a* and **47***a* defined by the struts **45–47** for the embodiment of FIG. **8** extend in mutually perpendicular direction. The downwardly extending channel **47***a* would, of course, be slightly modified to accommodate the inclination of the rear upright columns **29** and **30**. Similar gussets can be adapted to beams of round or rectangular cross sections. The primary function of the gusset **42**, as already mentioned, is to interconnect the intersecting transverse and longitudinal beams with the upper end of one of the columns in such a fashion that any applied stress will be transmitted from the upper beams to the column in a smooth transition so that the stress may be borne by the frame of the vehicle and there will be only a minimum of deflection of the superstructure. This smooth transition of applied stress to the upright columns is not impeded by inclining the upright column relative to the channels **45***a*, **46***a*, thereby permitting the same gusset configuration to be used on superstructures for different vehicles. In addition to the above-mentioned manner of manufacturing the gusset **42**, it may equally well be fabricated by welding individual parts together or it may be cast.

Reference is now made to FIG. **9** and to the forward right-hand corner of the superstructure—i.e., at the intersection of beams **41***a* and **41***c* with column **27**. In that corner, the strut **45** receives the beam **41***a*, the strut **46** receives beam **41***a*, and the strut **47** is attached to the column **27**. Thus, the plate **47***d* forms a diagonal reinforcing and connecting member between beam **41***a* and column **27** for force transmission. In like fashion, it will be seen that the plate **46***d* provides a diagonal brace between beam **41c** and column **27**. Lastly, the plate **45***d* serves as a diagonal brace between the beams **41***a* and **41***c*. Each of the tab portions associated with a particular strut is welded to its associated column or beam, as the case may be. It will be observed that each tab is relatively small in cross sectional area at its distal end, and this area gradually increases toward the junction with its associated diagonal brace. This gradual increase in size effects a smooth transition of stresses under load to the gusset and thence to a column. Other shapes may be used for the tab, but it should preferably exhibit this characteristic. As a consequence, the triangular plate **48** provides a load transmitting element extending between and secured to each pair of intersecting structural members, and each of the diagonal braces, sometimes referred to as "flanked portions," of the corner gusset is an integral extension of the triangular center plate which serves as a base common to all three intersecting structural members.

Referring to the gusset located diagonally opposite the one just discussed, it will be noted that the web **49** extends between column **30** and beam **41***d*, and the web **50** extends between column **30** and beam **41***b*. These two triangular webs fill in the spaces between the diagonal braces **46***d* and **47***d*, and the two intersecting structural members (beam and column) which these plates join. The webs have their edges welded to the corresponding structural members, thus adding further reinforcement to the corner interconnection.

The triangular webs **49** and **50** are shown in the corner gusset **42** provided at the left rear corner in FIG. **7.** It is also possible to have a similar triangular web extending between the struts **45** and **46** in a horizontal plane. However, usually the superstructure is equipped with a canopy, as mentioned, which serves as a reinforcing corner web for the two intersecting beams at each corner.

Due to the shape in which the corner gusset **42** is constructed, it is economical from the standpoint of the amount of material actually required in its production, and its interconnection to the associated beams and columns does not present any particular problem. What is more important, however, is that it provides for an equalized and smooth transition of stress between all connected structural members. The tabs by which the gusset is secured to the beams and columns act as stress reducing elements in distributing the load along these structural members while the triangular median plate **48,** adjoining all of the struts, tends to distribute the load about all three intersecting structural members. Thus, a smooth transition in section strength is made possible between all of the intersecting members and the corner gusset provides good load carrying capability in all directions instead of only a single direction. By this means we are able to provide a structure wherein a stress loading applied to one structural member is not absorbed by that particular structural member but instead is transmitted to other structural members. Instead of having the stress mainly resisted by a particular column, the stress is distributed by means of the beams and corner gussets to the other three columns and thence to the vehicle frame thereby making for a stronger and much more effective rollover protection because the strongest portion of the frame may then bear the bulk of the load.

The same type of corner gusset may be employed in connection with the showing in FIGS. **4** and **4***a*. The showing there is of a superstructure especially suitable for a loader, only a portion of which is seen. Further, the illustration shows the loader after stress is applied in accordance with the SAE test mentioned above.

In FIGS. **4** and **4***a* the overlying canopy is again designated by the numeral **93** with the depending side flanges being designated **43***a* and **43***b*. Corner gussets are denoted **42,** and it will be seen that the upright columns **27–30** are all vertical and of about the same length.

The mounts **31** are similar to the mounting means already described, and they connect the bottom portions of the upright columns **29** and **30** to brackets designated **55** in FIG. **4.** The brackets **55** are supported by laterally-extending members **56** which, in turn, are supported by angle brackets shown partially in dashed line and designated **57.**

The forward upright columns **27** and **28** are secured to lateral rails **58** which are supported, in turn, by plates **59.** The plates **59** are braced by means of inclined braces **60** against reinforced sidewalls **70.** The sidewalls **70** are, in turn, secured to the frame of the vehicle. For this embodiment, the rear mounts for the upright columns **29, 30** are intended to bear a greater rollover stress than forward columns.

Referring now to FIG. **4,** the critical zone may be diagrammatically illustrated by the dashed line C, as viewed from the rear. When a lateral force, indicated by the arrow F is applied to the top of the superstructure, the force is transmitted to the beams and columns of the superstructure, held together by the gussets **42** and then to the supporting brackets and the frame of the vehicle. The superstructure will deflect in the manner illustrated in FIG. **4** whereby the transverse and horizontal beams will be translated to the right, thereby bending the upright columns **29, 30** in the manner shown. However, none of the superstructure will enter into the critical zone C. In addition, it will be observed that the forward vision of an operator in the direction of intended travel of the loader is not impaired in the slightest by the superstructure. Thus, an operator during rollover is enclosed on all sides of his person by means of the superstructure (as distinguished from some systems wherein a canopy is cantilevered over an operator from the rear), and the inventive system permits adaptation of the basic system of upright columns and transverse and longitudinal beams to vehicles of many different designs while insuring that the applied rollover stress is transmitted in uniform transition from the horizontal beams to the vertical columns and thence to that portion of the vehicle frame which is best suited to bear the rollover stresses.

Turning now to FIG. **10,** there is shown a view of an upper corner of a rollover protective system, similar to FIG. **9,** except that the canopy **43** is missing. In this embodiment, a longitudinal beam **65** is shown to have a tubular shape, and a similar transverse beam **66** is connected to the end of the beam **65.** An upright corner column is designated **67.** A corner gusset, generally designated by reference numeral **68** interconnects the beams **65–67,** and it includes first and second tabs **69** and **70** for welding to the column **67** as well as similar tabs for welding to the beams **65** and **66.** The principal difference of the gusset **68** from that previously described is in the inclusion of a smoothly curved plate **71** interconnecting the three struts which are generally designated by reference numeral **73, 74,** and **75** respectively. The struts secured to the upper beam **65** and **66** do not have tabs for welding to the sides of those beams, that is, each strut has only a lower tab and these are designated respectively **73***a* and **75***a* which weld respectively to the lower surfaces of the beams **66** and **65.**

Under lateral stress, the embodiment depicted in FIG. **10** deforms in a manner illustrated in FIG. **11** wherein the vertical column **67** and the beam **65,** although forced together, are braced apart by the smooth curvature of the corner gusset **68,** this bracing, of course, affords a smooth transition of applied stress among all of the three interconnecting superstructure members **65–67.**

Turning now to FIG. **12,** there is shown a front perspective view of a scraper which is provided with a rollover protective system constructed according to the present invention. The scraper includes a rear bowl generally designated **75** and a forward cab **76.** The operator's station is generally designated by reference numeral **77** and it is located forwardly and above the forward wheels **79.** A horizontal frame platform **80** is connected to the forward chassis of the scraper.

The rollover protective system for the scraper includes a superstructure generally designated **81** which includes four generally upright columns **82, 83, 84** and **85** as well as two longitudinal upper beams **86** and **87** and two transverse beams **88** and **89.** The operator's station is normally enclosed by means of panels secured to the superstructure **81,** but the panels have not been

illustrated in order to more clearly show the superstructure. At the forward upper portion of the operator station there is a windshield **90**.

The corners of the upper beams and upright columns are connected with corner gussets generally designated by reference numeral **92** which are similar to the corner gussets **42** which have been previously described in connection with FIG. **8** particularly.

Turning now to FIGS. **16** and **17**, the rear corner column **84** is seen to comprise an upper generally vertical portion **84**a and a lower inclined portion **84***b*. A gusset **95** braces the upper and lower portions **84***a*, **84***b* of the beam **84**. The gusset **95** is similar to the previously-described gussets **92** in its attachment to the intersecting beamed portion and its ability to effect a smooth transition of forces between interconnected beam members.

The gusset **95** includes an upper tab **97** which is welded to the forward surface of the vertical beamed portion **84***a* and a lower tab **98** which is welded to the lower beam portion **84***b*. An inclined interconnecting plate **99** (see FIG. **12**) interconnects the tabs **97, 98**. First and second side portions (only one of which is shown in FIG. **16** and is designated **100**) extend from the plate **99** for engaging the forward surfaces of both beam portions **84***a*, **84***b* to brace them against buckling.

Turning now to FIG. **17**, the forward vertical columns **82, 83** are further interconnected by means of a horizontal forward beam **103** which is braced respectively against the upright columns **82, 83** by two pairs of right-angle gussets which are generally designated by reference numeral **104**, all of which may be identical. The right-angle gussets **104** are single to the just-described gusset **95** for interconnecting and bracing two intersecting beams, except that the end tab portions (designated **106** and **107**) extend in perpendicular directions. The gusset **104** is otherwise modified to accommodate a right-angle intersection of the two beams.

As will be further observed from FIG. **17**, the rear right corner column **85** is inclined outwardly relative to the front corner beam **82**, and as has already been mentioned, it is considered one of the features of the present invention that such beams may be angled either to connect the superstructure at its base to the strongest portion of the vehicle frame, or, if desired, to lend an aesthetic appearance to the operator's cab.

The two rear beams **84, 85** may be further braced by means of a horizontal beam partially shown in FIG. **17** and designated by reference numeral **110**. The beam **110** will come, of course, connected to the upright columns by means of gussets, one of which is partially shown in FIG. **17** and designated **111**.

The bottom of the column **85** is connected to a portion of the frame designated **112** of the vehicle by means of a mount **113** which is similar to the previously-described mounts **31**, illustrated in FIGS. **5** and **6**. The bottoms of the remaining three upright columns **82, 83** and **84**, may be connected to the vehicle frame by an alternative type of mount which is generally designated by reference numeral **115** and shown in greater detail in FIGS. **14** and **15**. The mount **115** is an anti-vibration mount, as was the prevoiusly-described mount. The mount **115** has an advantage in low cost and simplicity over the previously-described mount.

Turning then to FIGS. **14** and **15**, the mount **115** is shown for connecting the upright forward column **83** to a bracket **116** which, in turn, is connected to the main frame of the vehicle. The mount includes an integral pedestal generally designated by reference numeral **118** and including an upper crown **119** of generally uniform rectangular horizontal cross section with rounded corners, and a base **120**. The outer periphery of the base **120** is approximately equal to the dimension of the outer periphery of the upright column **83**, and it is welded as at **121** to the bracket **116**. The lower end of the column **83** is spaced above the upper surface of the base **120** of the mount, as indicated by the distance S in FIG. **114**, for reasons which will be explained presently.

The crown portion **119** of the mount is provided with a transverse channel **125** which receives a flexible filler **126**. The filler **126** is provided with a bore **127** which receives a shaft **128**. The bore **127** of the filler **126** may be elongated slightly in a vertical direction as illustrated in FIG. **15**, if desired. The bolt **128** is provided with a hexagonal head **129**, and the other end of the bolt **128** may be threaded to receive a nut in securing the upright column **83** to the pedestal **118**.

At the top of the crown **119** there is a cap **130** which includes a peripheral bumper member **131**. The cap **130** may also be of a hard flexible material, and it serves as a cushion for the interior of the tubular column **83** when it is deflected as shown in FIG. **15**. As illustrated in FIG. **15**, the lower portion of the column, when deflected, will tilt as shown, and the spacing S permits a uniform tilting of the column about the shaft of the axis **128** without binding. The cushion or bumper **131** as well as the flexible filler material **126** reduce vibration during operation.

Turning now to FIG. **13**, there is shown a test stand for testing the rollover protective system superstructure for the scraper shown in FIG. **12** after the lateral force has been applied. The test stand includes an outwardly extending beam **135** which is secured to it by means of bolts **136** and is cantilevered in a slightly upwardly inclined position to accommodate the superstructure **81**.

The applied simulated rollover stress force may be applied in the direction of the arrow **138**.

With the present invention, then, there is provided a rollover protective system which is capable of being fabricated to fit the individual needs of each vehicle type. Primary among these needs is an ability to transmit any applied rollover stress, whether actual or simulated, to that portion of the vehicle frame which is best able to withstand it. Secondly, the rollover protective system, having as it does a superstructure interconnected with the novel gussets illustrated and described, is able to transmit the rollover stress in orthogonal directions and in smooth transition, thereby to distribute the applied rollover stress to all portions of the frame equally.

Having thus described in detail a preferred embodiment of the inventive system, persons skilled in the art will be able to modify certain of the structure which has been illustrated and to substitute equivalent elements for those which have been described while continuing to practice the principle of the invention; and it is, therefore, intended that all such modifications and substitutions be covered as they are embraced within the spirit and scope of the appended claims.

1. A rollover protective system for vehicles comprising: at least four generally upright columns spaced at

the corners of an operator's station; a plurality of generally horizontal beams interconnecting the upper ends of said columns to provide a superstructure; gusset means for rigidly interconnecting each column with its associated beams, each gusset means comprising an integral corner gusset having three struts extending in generally perpendicular relation, each strut including members welded to an associated beam or column, and rigid median plate means interconnecting all of said struts to provide a smooth transition of applied stress from said beams to said columns; and mounting means pivotally interconnecting the lower end of each column to the frame of said vehicle when said structure is in assembled relation with said vehicle.

2. The structure of claim **1** wherein said members of each strut comprise first and second tabs extending in generally perpendicular planes and adapted to be welded to adjacent sides of an associated beam or column having a generally rectilinear cross section.

3. The structure of claim **2** wherein said rigid median plate means of each strut comprises a diagonal brace plate extending between each pair of struts, and a generally triangular median plate connected to the inner edge of each of said brace plates.

4. The structure of claim **2** wherein each median plate means of said struts comprises diagonal brace plate means extending between at least two pairs of said struts and a smoothly curved median plate connected to the inner edge of each of said brace plates.

5. The structure of claim **1** wherein at least one of said columns is shorter than the others and inclined relative to a vertical line extending perpendicular to its associated beams to thereby draw any load applied to said protective structure to a stronger part of the vehicle frame.

6. The structure of claim **1** wherein said protective structure is adapted to receive enclosing panels thereby to enclose the operator's station and provide the operator with environmental protection.

7. A rollover protective structure for vehicles comprising: a plurality of generally upright columns spaced about an operator's station; a plurality of generally horizontal beams interconnecting the upper ends of said columns to provide a superstructure; gusset means for rigidly interconnecting each column with a pair of associated beams, each gusset means including an integral corner gusset having three struts extending in generally perpendicular relation, each strut including a pair of tab members welded to an associated beam or column, and rigid median plate means interconnecting all of said struts to provide a smooth transition of applied stress from said beams to said columns; and mounting means interconnecting the lower end of each column to the frame of said vehicle when said structure is in assembled relation with said vehicle.

* * * * *