350-448 SR T4090N

OR 3,784,282 X4094H

United States Patent [19]

Yamazaki et al.

[11] **3,784,282**

[45] **Jan. 8, 1974**

[54] **CORRECTING LENS USED TO FORM FLUORESCENT SCREENS OF COLOUR TELEVISION RECEIVING TUBES**

[75] Inventors: **Eiichi Yamazaki**, Ichihara; **Koichi Maruyama; Toshio Ueda**, both of Mobara, all of Japan

[73] Assignee: **Hitachi, Ltd.**, Tokyo, Japan

[22] Filed: **Feb. 23, 1972**

[21] Appl. No.: **228,639**

[30] **Foreign Application Priority Data**

Mar. 5, 1971 Japan 46/13665

[52] **U.S. Cl.** ..... **350/175 R**, 95/1 R, 350/205, 350/213

[51] **Int. Cl.** **G02b 3/00**

[58] **Field of Search** ..... 350/205, 189, 193, 350/194, 211, 213, 175 R

[56] **References Cited**

UNITED STATES PATENTS

3,279,340	10/1966	Ramberg et al.	350/205 UX
3,628,850	12/1971	Yamazaki et al.	350/189 X
3,134,021	5/1964	Ploke	350/205 X

Primary Examiner—John K. Corbin

Attorney—Charles E. Pfund and Chittick, Thompson & Pfund

[57] **ABSTRACT**

In a correcting lens utilized to form the fluorescent screen of a colour television receiving tube, the lens being of the type wherein the effective surface of the lens through which the effective light beams pass is divided into a plurality of discontinuous effective regions of relatively small inclination angles with respect to the bottom surface of the lens and the adjacent effective regions are interconnected by connecting regions of larger inclination angles with respect to the bottom surface, opaque or translucent films are applied to the connecting regions.

5 Claims, 5 Drawing Figures

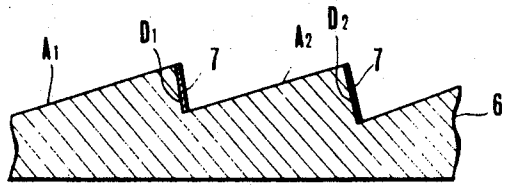

FIG. 1

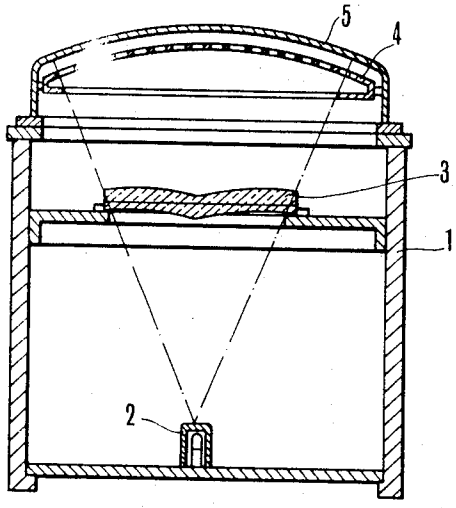

FIG. 2

PRIOR ART

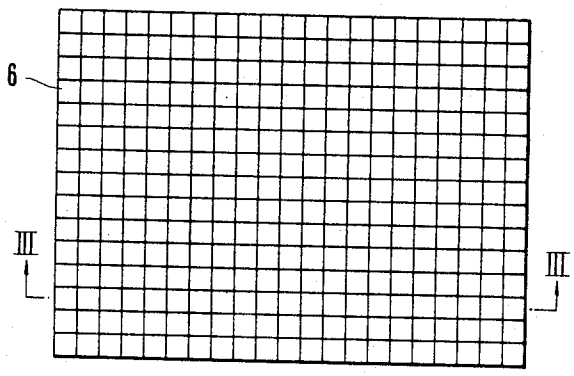

FIG. 3

FIG. 4

PRIOR ART

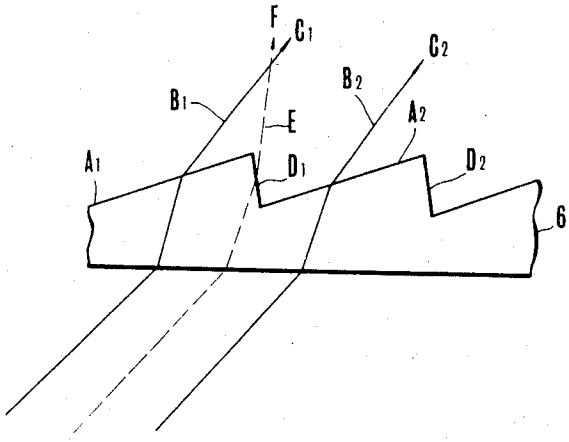

FIG. 5

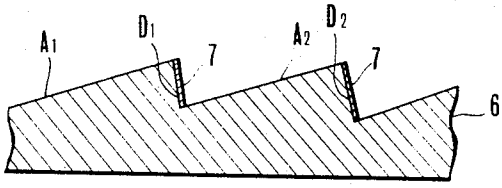

CORRECTING LENS USED TO FORM FLUORESCENT SCREENS OF COLOUR TELEVISION RECEIVING TUBES

BACKGROUND OF THE INVENTION

This invention relates to a correcting lens utilized to correct the locus of a light beam adapted to form phosphor dots of colour television receiving tubes.

It is usual to form the fluorescent screen of a shadow mask type colour television receiving tube by photographic technique wherein a plurality of trios of phosphor dots of red, blue and green are applied in a regular pattern on the inner surface of the panel of the tube. Phosphor dots are generally formed by exposing to light the fluorescent screen by utilizing an exposure device schematically illustrated in FIG. 1 of the accompanying drawing. The exposure device shown in FIG. 1 comprises a source of light 2 and a correcting lens 3 which is used for the purpose of causing the locus of the light beam emanated from the source of light 2 to approximate to that of the scanning electron beam. Above the correcting lens 3 is mounted a panel 5 including a shadow mask 4 of a colour cathode ray tube. Thus, the panel 5 is exposed to the light beam from the source of light 2 through the correcting lens 3 and through the perforations of the shadow mask 4.

As above described, since the purpose of the correcting lens 3 is to cause the locus of the light beam to approximate to that of the electron beam the surface of the lens is formed as a curved surface of an extremely complicated construction having a number of regions of different curvatures.

The surface of a prior art correcting lens has generally been in the form of a continuously curved surface. With a lens of such a continuously curved surface the purpose of causing the locus of the light beam to approximate to that of the scanning electron beam can not be fully attained so that it is impossible to perfectly match the phosphor dots and the scanning electron beam spots over the entire inner surface of the panel. For this reason, in a colour television receiving tube with a fluorescent screen formed by using a prior art correcting lens having a continuously curved surface has a drawback of accompanying a colour shading, thus impairing the quality of the reproduced image.

To solve this problem it has been proposed a correcting lens having a discontinuously curved surface wherein the surface of the lens if divided into a plurality of regions and the respective regions are finished to provide predetermined flat surfaces or curved surfaces, as shown in FIGS. 2 and 3.

Although such a correcting lens having a discontinuously curved surface can cause the locus of the exposure light beam to substantially match with that of the scanning electron beam, it has created the following problems.

More particularly, as shown in FIG. 4 the cross-sectional configuration of the prior art correcting lens resembles saw teeth having effective regions A_1, A_2 — of relatively small inclination angles with respect to the horizontal or the bottom surface of the lens and regions D_1, D_2 — of large inclination angles with respect to the horizontal and interconnecting adjacent regions A_1, A_2 —. Although light beams B_1 and B_2 passing through the effective regions A_1, A_2 — travel straightforwardly in the prescribed direction C_1, C_2 —, the beam passing through the connecting regions D_1, D_2 — travels in the direction F which is quite different from the prescribed direction. Accordingly, the beam E directed to the unwanted direction F will pass through a perforation of the shadow mask and impinge upon an unwanted portion of the inner surface of the panel thus forming a phosphor dot thereat. In this manner, the colour television receiving tube having a fluorescent screen with phosphor dots formed by using the correcting lens described above is also formed with phosphor dots at unwanted portions so that colour mixing of the picture is unavoidable.

SUMMARY OF THE INVENTION

Accordingly, it is the object of this invention is to provide an improved correcting lens which can form phosphor dots in a regular pattern on the inner surface of the panel of a colour television receiving tube and can prevent phosphor dots from being formed at the unwanted portions thus eliminating colour mixing of the reproduced image.

According to this invention, there is provided a correcting lens adapted to be used for forming a fluorescent screen of a colour television receiving tube, the lens being of the type wherein the effective area of the lens through which the exposure light beams pass is divided into a plurality of discontinuous effective regions of relatively small inclination angles with respect to the bottom surface of the lens and the adjacent effective regions are interconnected by connecting regions of larger inclination angles with respect to the bottom surface, characterized in that light intercepting films are applied to the connecting regions.

BRIEF DESCRIPTION OF THE DRAWINGS

In the accompanying drawing:

FIG. 1 shows a longitudinal sectional view of a typical apparatus for exposing the panel of a colour television receiving tube;

FIG. 2 is a plane view of a prior art correcting lens utilized in the exposure apparatus shown in FIG. 1;

FIG. 3 shows a cross-section of the lens shown in FIG. 2 taken along a line III—III;

FIG. 4 is an enlarged cross-sectional view of a portion of the lens shown in FIGS. 2 and 3 explaining the travel of exposure light beams and

FIG. 5 shows an enlarged cross-section of a portion of the lens embodying the invention.

DESCRIPTION OF THE PREFERRED EMBODIMENT

A preperred embodiment of the invention will now be described with reference to FIG. 5 in which portions corresponding to those shown in FIG. 4 are designated by the same reference characters. According to this invention, the regions D_1, D_2 — interconnecting adjacent effective regions A_1, A_2 — of relatively small inclination angles with respect to the horizontal or the bottom surface of the correcting lens 6 are coated with films 7 of opaque material. Effective regions A_1, A_2 — may be flat surfaces of different inclination angles or curved surfaces of different radii of curvature.

With this construction, exposure light beams impinging upon the connecting regions which otherwise would be directed to unwanted portions of the face plate as above described are intercepted by the films 7 of opaque substance with the result that only the beams passed through the effective regions A_1, A_2 — are

transmitted in the prescribed directions to form phosphor dots on the inner surface of the face plate at the desired portions thereof. In other words, it is possible to prevent phosphor dots from being formed at unwanted portions. Thus, the tube having a fluorescent screen fabricated by using the correcting lens embodying the invention is completely free from colour mixing.

Substantially the same object can also be attained by applying films of translucent substance on the connecting regions D in which case the light beams transmitting through such translucent films are greatly weakened.

It is to be understood that the novel correcting lens can also be used to form phosphors in the form of stripes.

What is claimed is:

1. In a single correcting lens adapted to be used for refracting light for forming the entire area of a fluorescent screen of a colour television receiving tube, said lens being of the type wherein the effective refracting surface of the lens through which the useful exposure light beams pass is divided into a plurality of discontinuous effective elemental regions with two dimensional boundaries, said elemental regions having surfaces of

relatively small inclination angles with respect to the bottom surface of the lens and the adjacent effective elemental regions interconnected at said boundaries by contiguous connecting ineffective refracting regions of larger surface inclination angles with respect to the bottom surface, the improvement which comprises light intercepting films applied only to said connecting ineffective regions of larger surface inclination for substantially reducing the intensity of erroneously refracted beams.

2. The correcting lens as claimed in claim **1** wherein said discontinuous effective regions are in the form of flat surfaces of different inclination angles.

3. The correcting lens as claimed in claim **1** wherein said discontinuous effective regions are in the form of curved surfaces of different radii of curvature.

4. The correcting lens as claimed in claim **1** wherein said light intercepting films are made of opaque substance.

5. The correcting lens as claimed in claim **1** wherein said light intercepting films are made of translucent substance.

* * * * *