United States Patent [19]

Gilbert

[11] **3,782,610**

[45] **Jan. 1, 1974**

[54] **BOTTLE VALVE**

[76] Inventor: **Lloyd H. Gilbert,** 1802 Tulare, Fresno, Calif. 93721

[22] Filed: **July 6, 1972**

[21] Appl. No.: **269,474**

[52] **U.S. Cl.** **222/484**
[51] **Int. Cl.** **B65d 25/42**
[58] **Field of Search** 222/481.5, 484, 482, 222/485, 464, 553, 545

[56] **References Cited**

UNITED STATES PATENTS

2,545,350	3/1951	Fuld	222/484
2,286,906	6/1942	Gaines	222/553 X
3,104,039	9/1963	Dike	222/484 X

Primary Examiner—Stanley H. Tollberg
Attorney—Herbert A. Huebner et al.

[57] **ABSTRACT**

A valve for a bottle having a port, the valve having a body adapted to be received in sealing relation on the port, the body having a passage extending therethrough in communication with the port; a closure rotationally mounted in sealing relation on the body, the closure having a passage registrable with the passage of the body; and a follower and cam way individually mounted on and interconnecting the closure and the body to limit rotation of the closure between an opened position in which the passages are in registration and a closed position in which the passage of the body is sealed by the closure.

2 Claims, 8 Drawing Figures

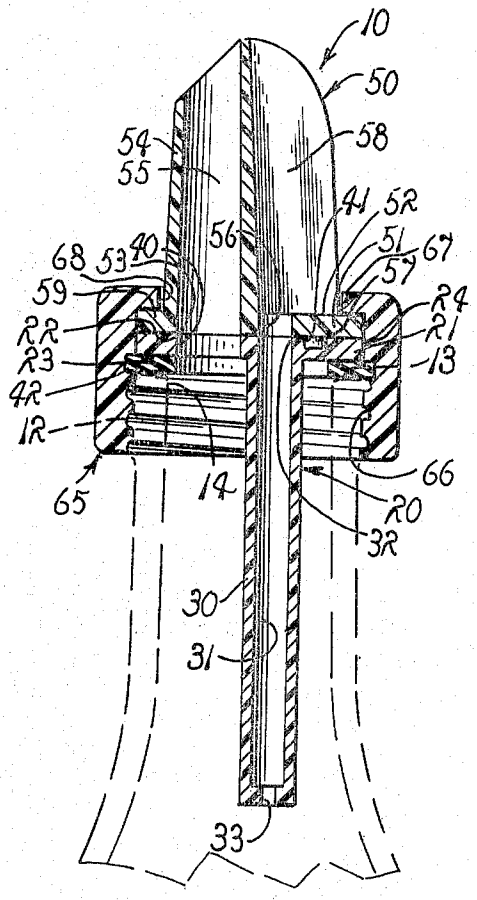

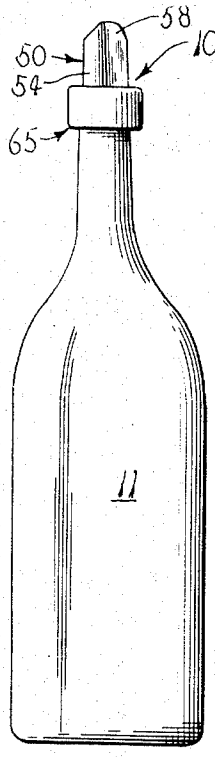

FIG. 1.

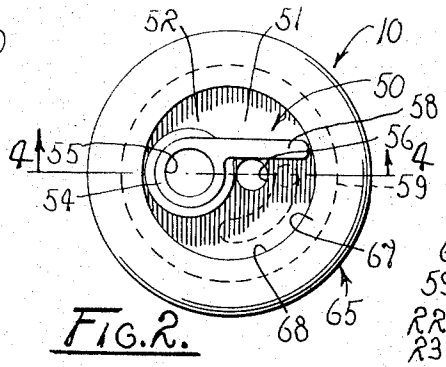

FIG. 2.

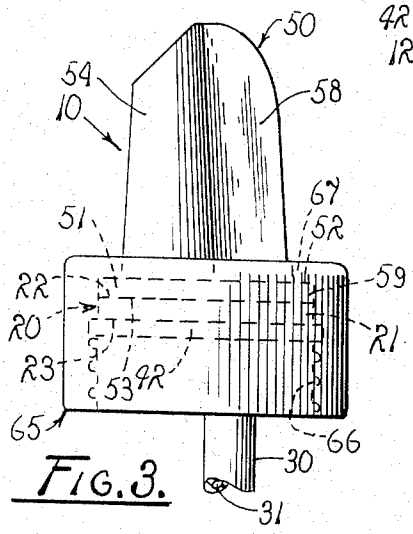

FIG. 3.

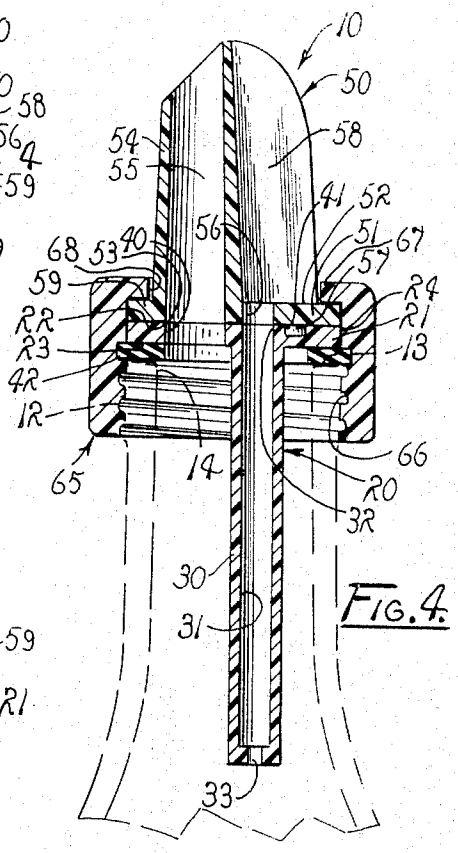

FIG. 4.

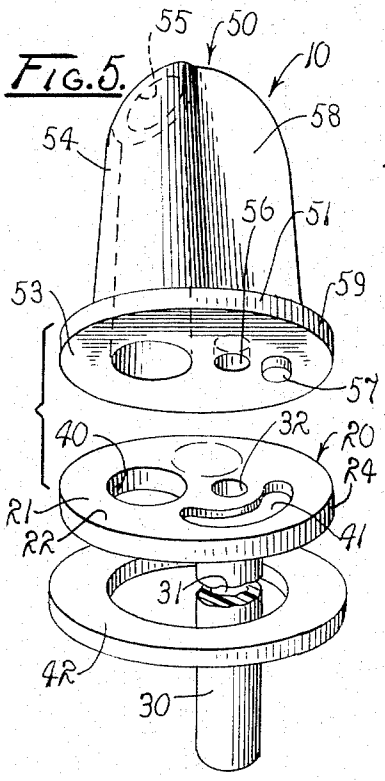

FIG. 5.

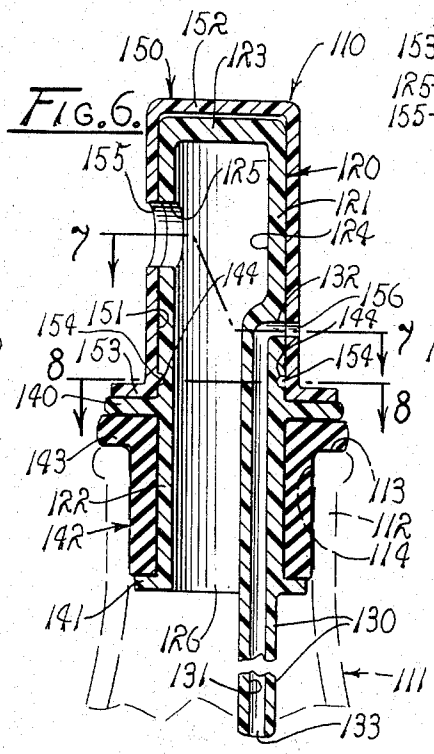

FIG. 6.

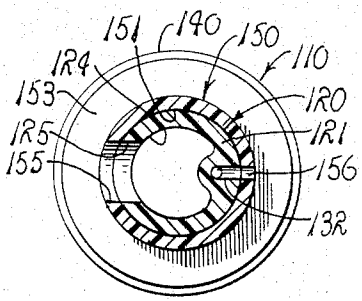

FIG. 7.

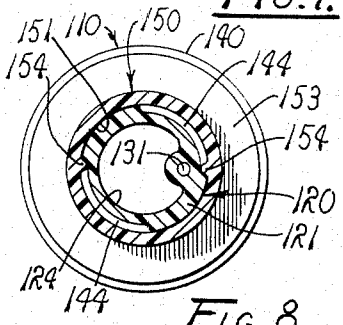

FIG. 8.

BOTTLE VALVE

BACKGROUND OF THE INVENTION

The present invention relates to a bottle valve and more particularly to such a bottle valve which is adapted to be readily adjusted between a position in which the contents of the bottle on which the valve is mounted can be accurately poured therefrom and a position in which the bottle is sealed so as to preclude access of deleterious matter to the contents of the bottle as well as to preclude evaporation therefrom.

It has long been known as advantageous to attach a pouring spout to a receptacle such as a bottle, can, or the like to assist in pouring. Such a pouring spout possesses particular utility where the contents of the bottle on which it is mounted is expensive or in some way dangerous such as in the case of liquor or chemicals. The pouring spout minimizes spillage during pouring by accurately directing the flow from the bottle.

Conventional pouring spouts are deficient in a number of significant respects. Most conventionally available pouring spouts do not allow closing of the spout when not in use. Thus, insects, dust and other deleterious matter can and often do gain access to the bottle, thereby contaminating its contents. Furthermore, particularly where only small quantities of the contents are used over a prolonged period of time, the loss due to evaporation is a problem.

A few conventional pouring spouts have a gravitationally positioned flap at the end of the spout for obstructing the spout when not in use. However, such flaps do not effectively seal the bottles since they are only gravitationally positioned and often do not fit properly. Furthermore, such spouts are mounted on the bottles only by being pressure fitted into the throat of the bottle. Over a long period of use, the spouts frequently loosen, increasing the risk of leakage, contamination and evaporation.

Therefore, it has long been recognized as desirable to have a bottle valve which permits selective opening and closing of an associated spout to permit sealing of the contents of the bottle from contamination and evaporation as well as to faciliate pouring of the contents from the bottle.

SUMMARY OF THE INVENTION

In view of the foregoing, it is an object of the present invention to provide an improved bottle valve.

Another object is to provide such a valve which is readily adjustable between an open position for pouring and a sealed position.

Another object is to provide such a valve which is adjustable to preclude the introduction of deleterious matter to the interior of the bottle on which the valve is mounted.

Another object is to provide such a valve which mounts securely on the existing threads at the pouring end of the bottle.

Another object is to provide such a valve which is adjustable to permit sealing of the bottle as tightly as desired.

Another object is to provide such a valve which is adjustable to preclude evaporation of the contents of the bottle.

Another object is to provide such a valve which may be constructed in any one of a variety of common sizes for use on bottles of those sizes.

A further object is to provide such a valve which is inexpensive to manufacture.

A still further object is to provide such a valve which is preferably constructed of a durable plastic material so as to provide a long operational life and to preclude the contamination of the contents of the bottle due to corrosion of the valve itself.

Further objects and advantages are to provide improved elements and arrangements thereof in a device for the purposes described which is dependable, economical, durable and fully effective in accomplishing its intended purposes.

BRIEF DESCRIPTION OF THE DRAWING

FIG. **1** is a side elevation of a bottle having the bottle valve of the first form of the invention mounted thereon.

FIG. **2** is a somewhat enlarged top plan view of the bottle valve shown in FIG. **1.**

FIG. **3** is a fragmentary, side elevation of the bottle valve.

FIG. **4** is a vertical section taken on line **4—4** of FIG. **2.**

FIG. **5** is an exploded perspective view of the bottle valve.

FIG. **6** is a vertical section of a bottle valve of the second form of the present invention.

FIG. **7** is a horizontal section taken from a position indicated by line **7—7** in FIG. **6.**

FIG. **8** is a horizontal section taken from a position indicated by line **8—8** in FIG. **6.**

DESCRIPTION OF THE FIRST EMBODIMENT

Referring more particularly to the drawing, the bottle valve of the first form of the present invention is generally indicated at **10.** As shown in FIG. **1,** the valve is intended to be mounted on a bottle **11** having an upper threaded end **12** with a circular rim **13** defining a port or pouring opening **14.**

The bottle valve **10** includes a body generally indicated at **20** in FIG. **5.** The body has a first plate **21** having parallel upper and lower surfaces **22** and **23,** respectively, and a circular periphery **24.** A substantially cylindrical air tube **30** extends into the bottle **11** from the lower surface of the plate parallel and eccentric to the axis defined by the plate, as best shown in FIG. **4.** The air tube has an internal passage **31** which communicates with the upper surface of the first plate through an air opening **32.** The tube has an air inlet **33** at the other end thereof.

A pouring opening **40** of somewhat larger diameter than the air opening **32** is provided in the first plate **21** interconnecting the upper and lower surfaces **22** and **23,** thereof. The opening defines an axis eccentric to the axis defined by the plate. An arcuate cam way **41** is provided in the upper surface of the plate defining a path of travel concentric to the plate. The cam way is positioned with one end thereof in alignment with the air opening and pouring opening of the plate and the other end thereof 90° therefrom along an arcuate path of travel, as best shown in FIG. **2.** A gasket **42,** having an outer diameter slightly larger and concentric to the first plate, is adapted to be positioned on the lower surface of the plate, as will subsequently be described.

A closure or head is mounted on the body **20** as generally indicated at **50** in FIG. **4.** The head has a second plate **51,** having upper and lower surfaces **52** and **53,**

respectively. A pouring spout **54** having a discharge passage **55** extending therethrough is coextensively mounted on the upper surface of the plate eccentric to the axis defined by the plate. The discharge passage communicates with the lower surface of the plate at a position corresponding to that of the pouring opening **40** of the first plate **21.** An air orifice **56** is provided in the second plate interconnecting its upper and lower surfaces in a position corresponding to that of the air opening **32** of the first plate. A cam follower **57** is mounted on the lower surface of the plate. The second plate is mounted on the first plate with the lower surface of the second plate in facing engagement with the upper surface of the first plate and with the cam follower received in the cam way **41.** A lever arm or wing **58** is mounted on the pouring spout substantially tangential thereto. The second plate extends radially outwardly of the wing and spout to form a flange **59.**

A substantially cylindrical cap is shown generally at **65** in FIG. **4.** The cap has an internally screw-threaded portion **66.** The other end thereof has an inwardly bent lip **67** which defines a central spout opening **68.** When the bottle valve **10** is in its assembled configuration, the cap is received about the pouring spout **54** and wing **58** of the head **50** with the lip rested against the flange **59** of the second plate **51.** The first plate **21** is received against the lower surface **53** of the second plate and the gasket **42** is received against the lower surface **23** of the first plate about the air tube **30,** as best shown in FIG. **4.**

DESCRIPTION OF THE SECOND EMBODIMENT

The bottle valve of the second form of the present invention is generally indicated at **100** in FIG. **6.** As shown in FIG. **6,** the valve is mounted on a bottle **101** having an upper end **102.** It will be seen that the bottle valve of the second form of the invention does not require the use of existing external threads at the upper end of the bottle. Therefore, the bottle shown does not possess such threads although they would not interfere with use of this form of the valve. The upper end of the bottle has a rim **103** which defines a pouring opening **104** for the bottle.

The valve **110** has a body generally indicated at **120** in FIG. **6.** The body consists essentially of a substantially cylindrical spout or pouring portion **121** and an opposite plug portion **122.** The pouring portion of the body has a sealed end **123.** The body defines an internal passage **124** having a pouring opening **125** adjacent to the sealed end and an entrance opening **126** at the opposite end of the body.

An air tube **130** is coextensively mounted within the internal passage **124** of the body **120** extending parallel to the axis defined by the body. The tube has an internal passage **131** communicating with the exterior of the body through an air opening **132** in the pouring portion of the body. The tube has an air inlet **133** at the other end thereof outwardly of the entrance opening **126** of the body.

A central flange **140** extends radially from the body **120** intermediate the pouring portion **121** and plug portion **122** thereof. An end flange **141** extends radially from the plug portion of the body about the entrance opening **126.** A resilient sleeve **142** of rubberized material having a stop flange **143** radially extending therefrom at one end thereof is fitted about the plug portion of the body between the central and end flange, as best shown in FIG. **6.** A pair of grooves **144** are provided in the periphery of the pouring portion of the body extending arcuately in opposite directions 90° from positions in alignment with the pouring opening **125** and air opening **132,** as best shown in FIG. **8.**

The bottle valve **110** has a substantially cylindrical closure generally indicated at **150** in FIG. **6.** The closure defines an internal passage **151** having a diameter equal to or slightly larger than that of the external periphery of the body **120.** The closure has a sealed end **152** and a bearing flange **153** radially extending from the end thereof opposite that having the sealed end. A pair of followers **154** are integrally provided on the closure extending inwardly of the internal passage in predetermined positions adjacent to the bearing flange. The closure affords a discharge opening **155** in a position corresponding to that of the pouring opening **125** of the body. An air orifice **156** is provided in the closure in a position corresponding to that of the air opening **132** of the body. The axes defined by the opening and orifice are in alignment with a line defined by the followers. The closure is received in covering relation about the pouring portion **121** of the body with the followers received in the pair of grooves **144** of the body.

OPERATION

The operation of the described embodiments of the present invention is believed to be clearly apparent and is briefly summarized at this point. Although there are significant structural distinctions, the bottle valves **10** and **110** of the present invention operate in substantially the same manner. The valve **10** is particularly adapted for use on a bottle **11** having an upper threaded end **12.** The valve **10** is mounted on the bottle by positioning the body **20** on the rim **13** of the bottle with the gasket **42** disposed between the lower surface **23** of the body and the rim of the bottle. Thus, the air tube **30** extends inwardly of the bottle. The head **50** is mounted on the upper surface **22** of the body with the cam follower **57** received in the cam way **41** as previously described.

The screw-threaded portion **66** of the cap **65** is then threadably secured on the upper threaded end **12** of the bottle so that the lip **67** of the cap is drawn downwardly against the flange **59** of the head **50.** The resilience of the gasket **42** allows the cap to be tightened to the extent desired so as to control the ease of rotational movement of the head with respect to the body. Such tightening of the cap secures the gasket in fluid-tight sealing relation against the rim so as to preclude the leaking of the contents of the bottle between the rim and the gasket or between the first plate **21** and the second plate **51.** So mounted on the bottle, the valve **10** is ready for use.

The bottle valve **110** is intended for use on virtually any bottle and is not dependent on the use of threads for attachment as in the first form of the invention. The valve **110** is mounted simply by pressure fitting the plug portion **122** of the body **120** within the pouring opening **114** of the bottle **111** until the stop flange **143** of the sleeve securely contacts its rim **113,** as shown in FIG. **6.** So mounted, the air tube **130** thereof extends inwardly of the bottle. The secure engagement of the resilient sleeve in the pouring opening insures that no leakage can occur between the rim and the stop flange thereof. When mounted in the bottle as described, the valve **110** is ready for use.

The valves **10** and **110** are sealed for storage in substantially the same manner. In the case of valve **10**, the head **50** is simply pivoted until the discharge passage **55** and air orifice **56** no longer communicate with the air opening **32** and pouring opening **40** respectively in a closed position designated by the follower **57** reaching the end of the cam way **41**. In the case of valve **110**, the closure **150** is rotated about the pouring portion **121** of the body **120** until the passage **151** and orifice **156** no longer communicate with the pouring opening **125** and air opening **132** of the body respectively. Thus, a closed position is reached, as designated by the followers **154** reaching the ends of the grooves **144**.

In order to pour contents from the bottle **11** on which the valve **10** is mounted, the head **50** thereof is rotated 90° from the closed position to an opened position as designated by the cam follower **57** reaching the other end of the arcuate cam way **41**. The pouring spout **54** and the air orifice **56** are thereby rotated a corresponding 90° so that they fully communicate with the pouring opening **40** and air opening **32**, respectively. The bottle is then simply tilted in the conventional manner to allow the contents of the bottle to pass through the upper threaded end **12** thereof, the pouring opening, the discharge passage **55**, and out through the pouring spout **54**. A smooth flow of fluid is insured by ambient air being drawn through the air orifice **56** and the air tube **30** into the interior of the bottle to displace fluid discharged through the pouring spout.

The bottle valve **110** is made operable in a similar manner by rotating the closure **150** 90° from the closed position to an open position as designated by the followers **154** within the pair of grooves **144**. Thus, the discharge opening **155** and air orifice **156** thereof communicate with the pouring opening **125** and air opening **132** of the body. Thereafter, the bottle **111** is simply tilted in the usual manner to allow the contents of the bottle to pass through the entrance opening **126**, the internal passage **124** and outwardly through the pouring opening and discharge opening. As with the bottle valve **10**, the flow of contents from the bottle is facilitated by the admission of ambient air through the air orifice **156** and air tube **130** to displace the contents of the bottle during discharge therefrom.

It will be noted that with both of the valves **10** and **110** the head **50** and closure **150** respectively can be rotated less than the maximum 90° so that the discharge of the contents from the bottles **11** and **111** respectively can be effectively regulated or limited. Similarly, both valves **10** and **110** are closed when desired by rotating the head and closure respectively back to the closed positions for storage. In the case of bottle valve **10**, the cap **65** can be tightened down on the threaded end **12** of the bottle after use to prevent inadvertent rotation of the head until the cap is again loosened for pouring.

Therefore, it will be seen that the bottle valves **10** and **110** of the present invention facilitate the pouring from bottles on which they are mounted. The valves also permit sealing of the bottles so as to preclude the possibility of deleterious materials gaining access to the contents of the bottles and simultaneously preventing evaporation of the contents from the bottles during storage.

Although the invention has been herein shown and described in what are conceived to be the most practical and preferred embodiments, it is recognized that departures may be made therefrom within the scope of the invention, which is not to be limited to the illustrative details disclosed.

I claim:

1. A valve for a bottle having a threaded end and opening, the valve comprising a plate adapted to be received on the end of the bottle in sealing relation to the opening, the plate having a passage extended therethrough in communication with the opening of the bottle; an air tube mounted on the plate extending inwardly through the opening of the bottle; an eccentric pouring spout rotationally mounted on the plate in covering relation to the passage and air tube; and guide means interconnecting the plate and pouring spout to guide the spout during pivotal movement so as selectively to seal and open the passage and air tube of the plate, said guide means including a flange radially extending from the pouring spout and mounted in facing engagement with the plate, the flange having an air opening registrable with the air tube of the plate when the pouring spout is in registration with the passage of the plate, said guide means further including a cap mounted in circumscribing, covering relation on the plate and flange of the spout and adapted to be threadably received in sealing relation on the threaded end of the bottle, and said guide means further including a cam and a cam follower individually mounted on and interconnecting the plate and flange to limit rotational movement of the spout between an open position in which the spout and passage and the air opening and tube are in registration and a closed position in which they are displaced from registration.

2. A pouring spout valve for a bottle, the valve comprising a substantially cylindrical body having a sealed end and an opposite entrance opening, a pouring opening provided in the body adjacent to the sealed end; a flange borne by the body extending radially therefrom to define a pouring portion of the body adjacent to the sealed end and a plug portion adjacent to the entrance opening; an air tube mounted within the body communicating with the exterior thereof in the pouring portion and extending outwardly of the body through the entrance opening; and a substantially cylindrical sealing closure, having a discharge opening and an air orifice selectively registrable with the pouring opening and air tube respectively of the pouring portion, secured in fitted, rotational relation about the pouring portion.

* * * * *