# United States Patent [19]

**Reimers**

[11] **3,780,647**

[45] **Dec. 25, 1973**


[54] **CONTAINER FLATTENING APPARATUS**


[75] Inventor: **James L. Reimers,** Saratoga, Calif.

[73] Assignee: **FMC Corporation,** San Jose, Calif.



[22] Filed: **Sept. 25, 1972**

[21] Appl. No.: **292,052**

[52] **U.S. Cl.** ..... **100/232,** 72/452, 100/215, 100/218, 100/238, 100/293, 100/295, 100/DIG. 2

[51] **Int. Cl.** ..... **B30b 7/04**

[58] **Field of Search** ..... 100/DIG. 2, 98, 215, 100/293, 295, 238, 232, 218; 83/6; 241/99; 72/452



[56] **References Cited**

UNITED STATES PATENTS

| | | | |
|---|---|---|---|
| 3,095,029 | 6/1963 | Lambert | 100/DIG. 2 |
| 3,106,888 | 10/1963 | Chapleau | 100/DIG. 2 |
| 3,204,550 | 9/1965 | Swiderski et al. | 100/DIG. 2 |
| 3,208,372 | 9/1965 | Taylor | 100/DIG. 2 |
| 3,253,537 | 5/1966 | Porter et al. | 100/215 |
| 3,374,730 | 3/1968 | Cain | 100/DIG. 2 |
| 2,773,536 | 12/1956 | Lange | 100/DIG. 2 |
| 2,737,995 | 3/1956 | Jennings | 100/DIG. 2 |
| 3,732,804 | 5/1973 | Moller | 100/232 X |
| 2,139,143 | 12/1938 | Wiswell | 100/DIG. 2 |
| 2,178,461 | 10/1939 | Apprill | 100/DIG. 2 |
| 2,373,057 | 4/1945 | Shinn | 100/DIG. 2 |
| 2,401,208 | 5/1946 | Walensky | 83/6 |
| 2,603,270 | 7/1952 | Voigt et al. | 100/DIG. 2 |
| 2,619,150 | 11/1952 | Smith | 100/DIG. 2 |
| 2,813,569 | 11/1957 | Nelson | 100/DIG. 2 |
| 2,905,079 | 9/1959 | Brock | 100/DIG. 2 |
| 2,958,273 | 11/1960 | Morrow | 100/DIG. 2 |
| 3,034,422 | 5/1962 | Howell | 100/DIG. 2 |
| 3,062,130 | 11/1962 | Huber et al. | 100/DIG. 2 |



*Primary Examiner*—Billy J. Wilhite
*Attorney*—F. W. Anderson et al.



[57] **ABSTRACT**

A can flattening apparatus has four diagonal creasing blades that are pressed into the cylindrical wall of the can through a housing, whereupon the can is flattened by axial compression between an anvil and rotatable base in the housing.


**8 Claims, 11 Drawing Figures**

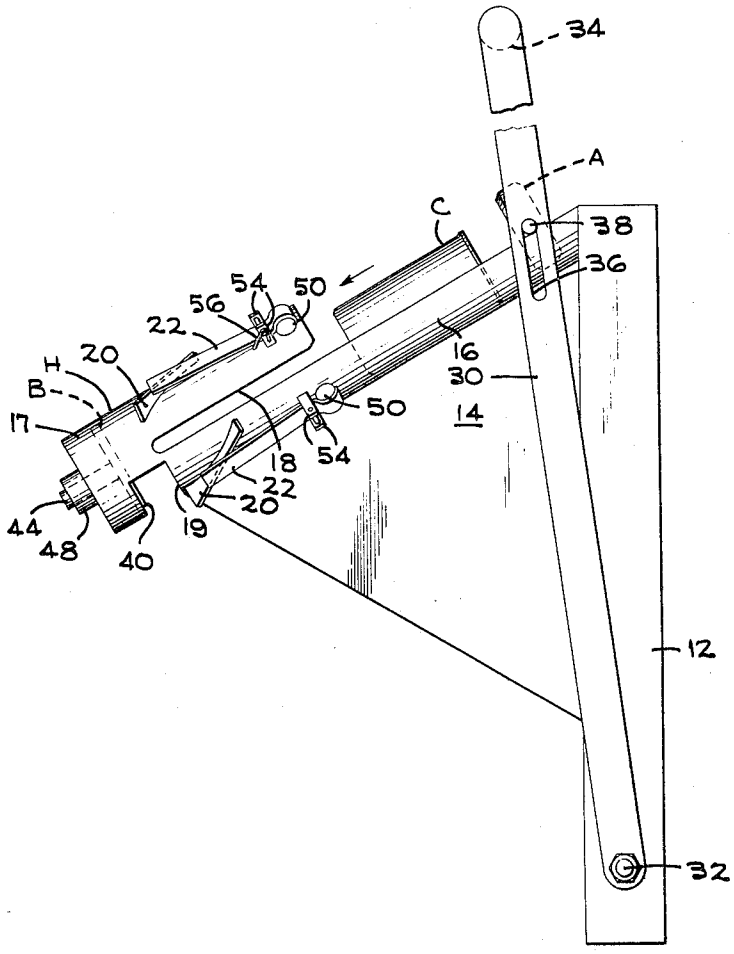

FIG_1

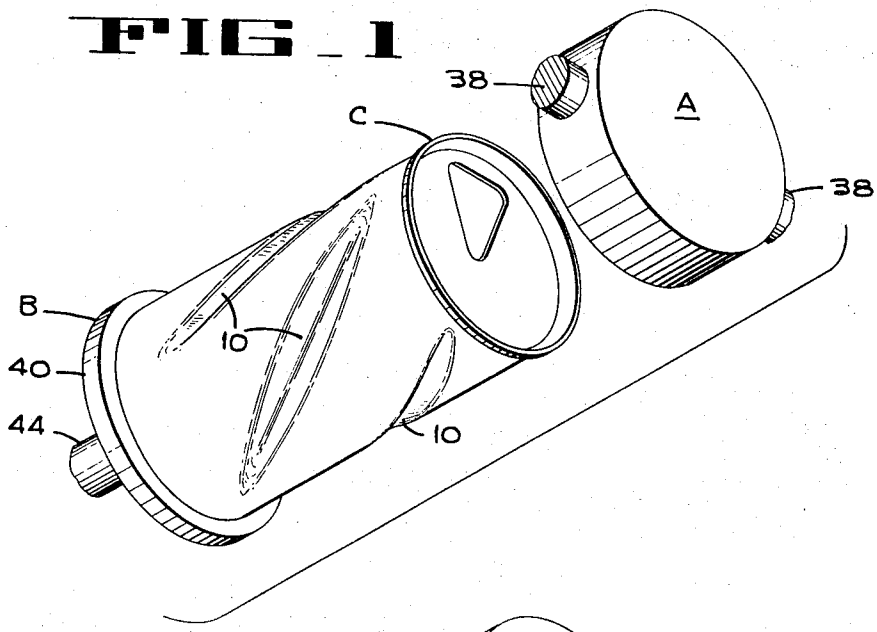


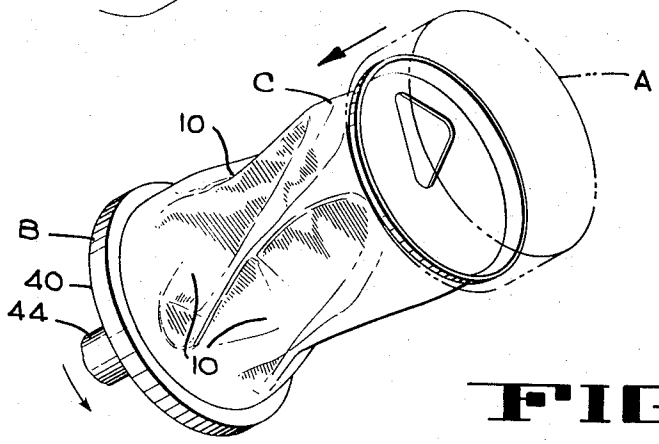


FIG_2

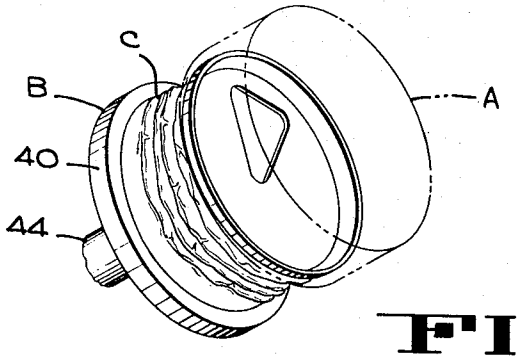


FIG_3

FIG_4

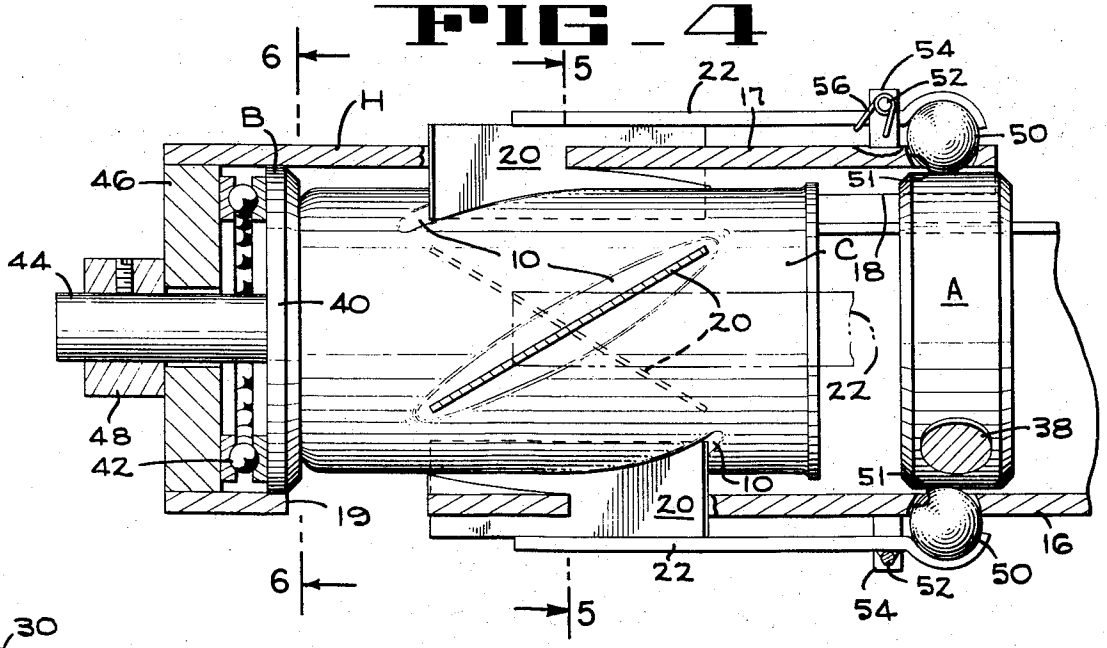


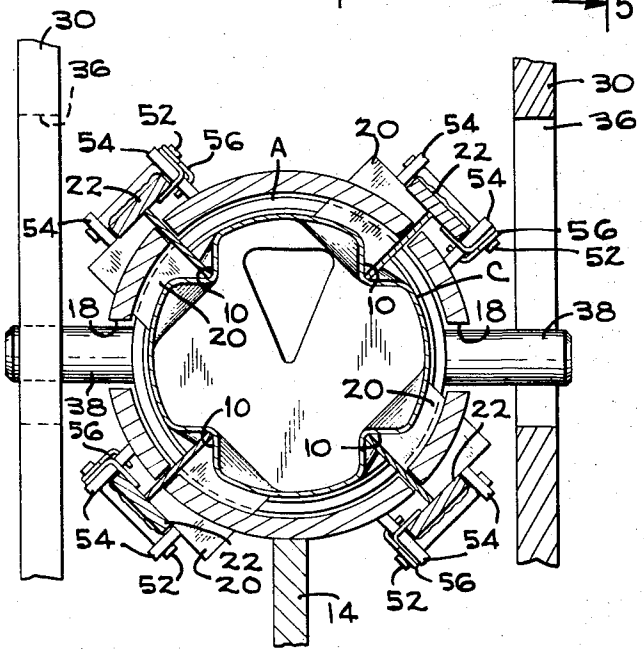


FIG_5

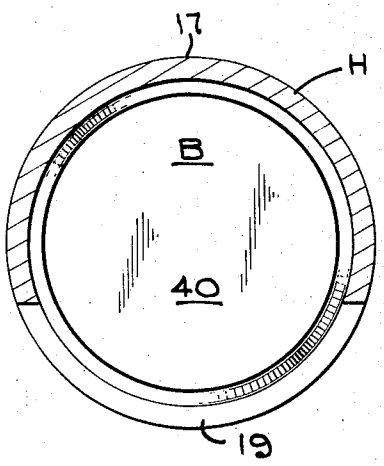


FIG_6

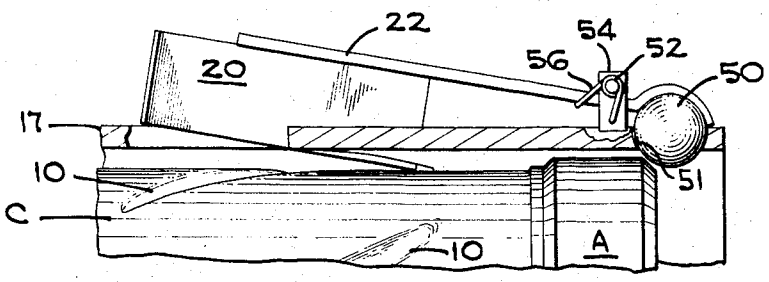


FIG_7

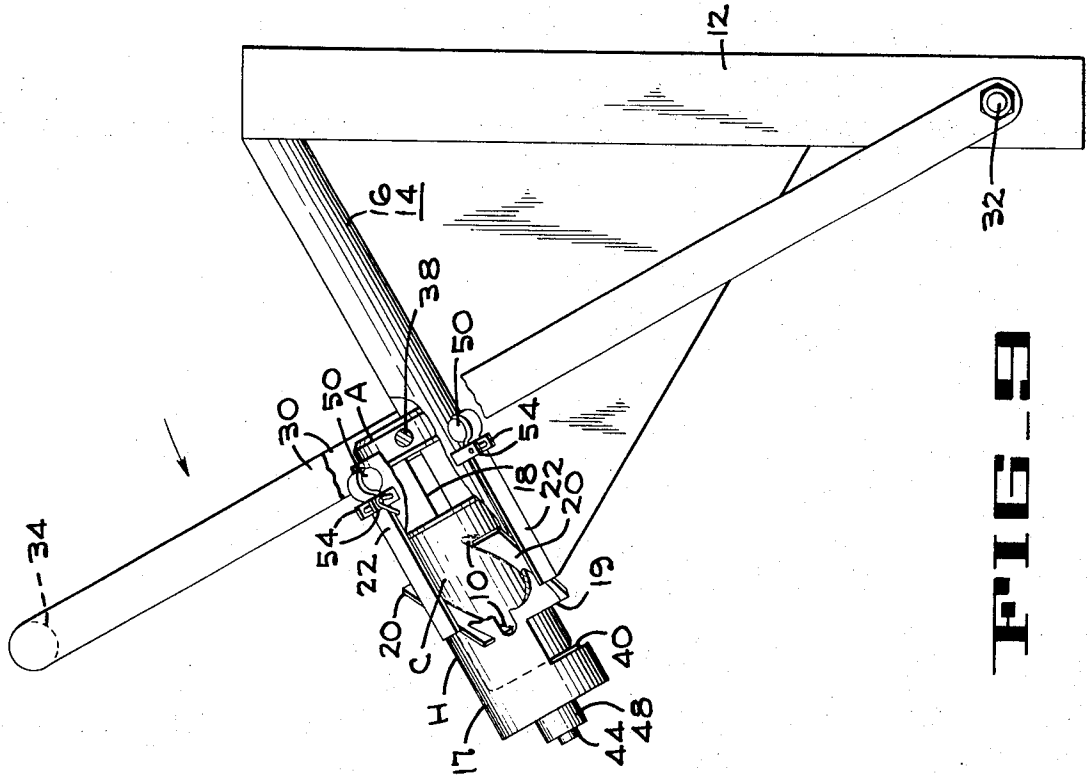
12
32
14
16
38
50
A
30
34
54
18
22
20
10
19
C
H
17
40
44
48

FIG. 9

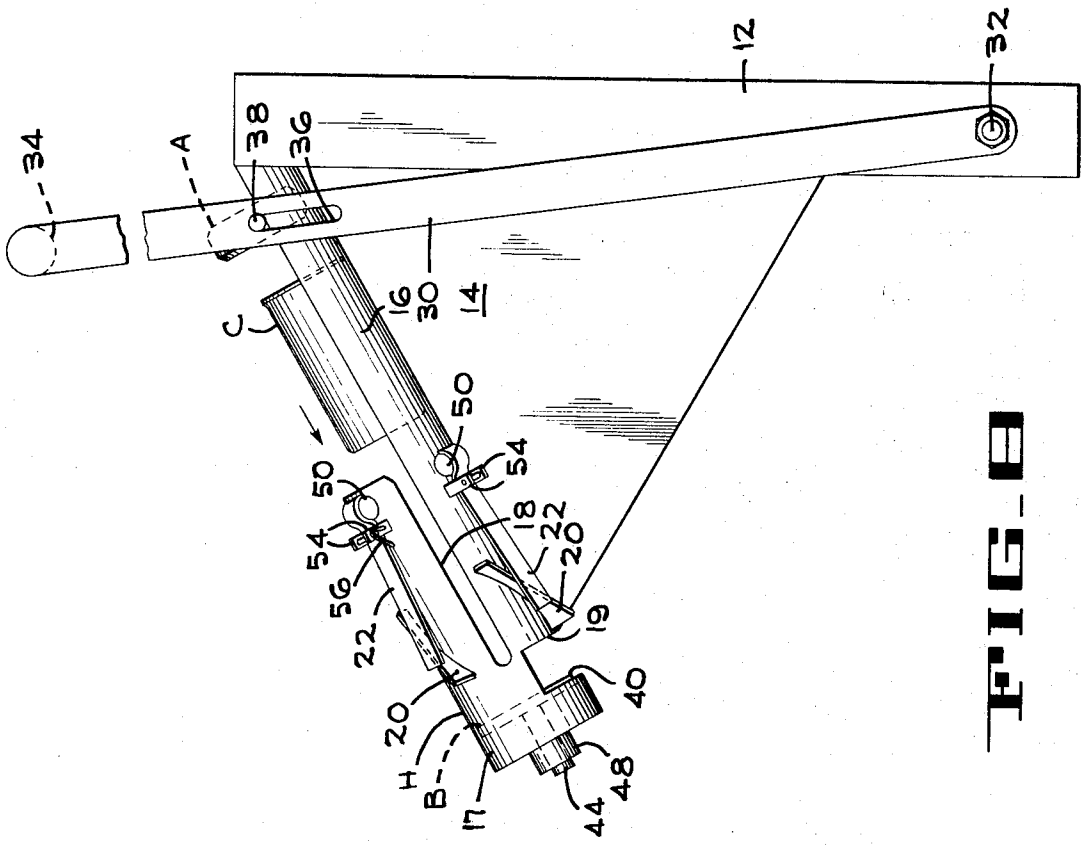
12
32
34
A
38
36
30
14
16
C
50
54
18
22
20
19
56
40
H
B
17
44
48

FIG. 8

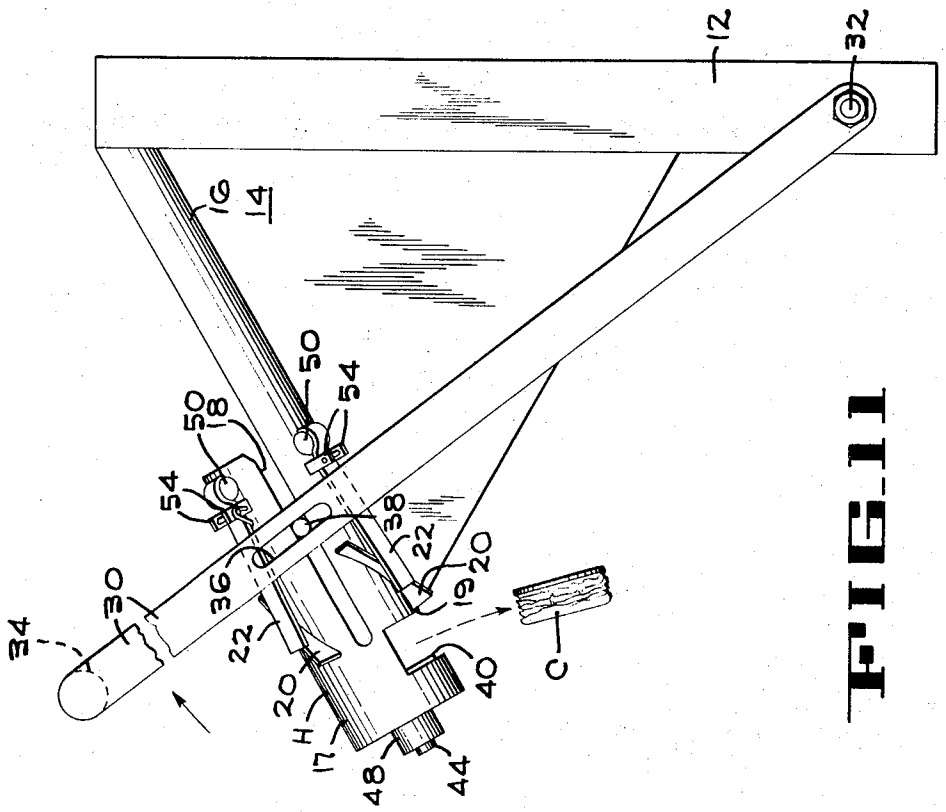
12
32
16
14
50
54
18
38
22
20
19
36
30
34
40
C
H
17
48
44

FIG. 11

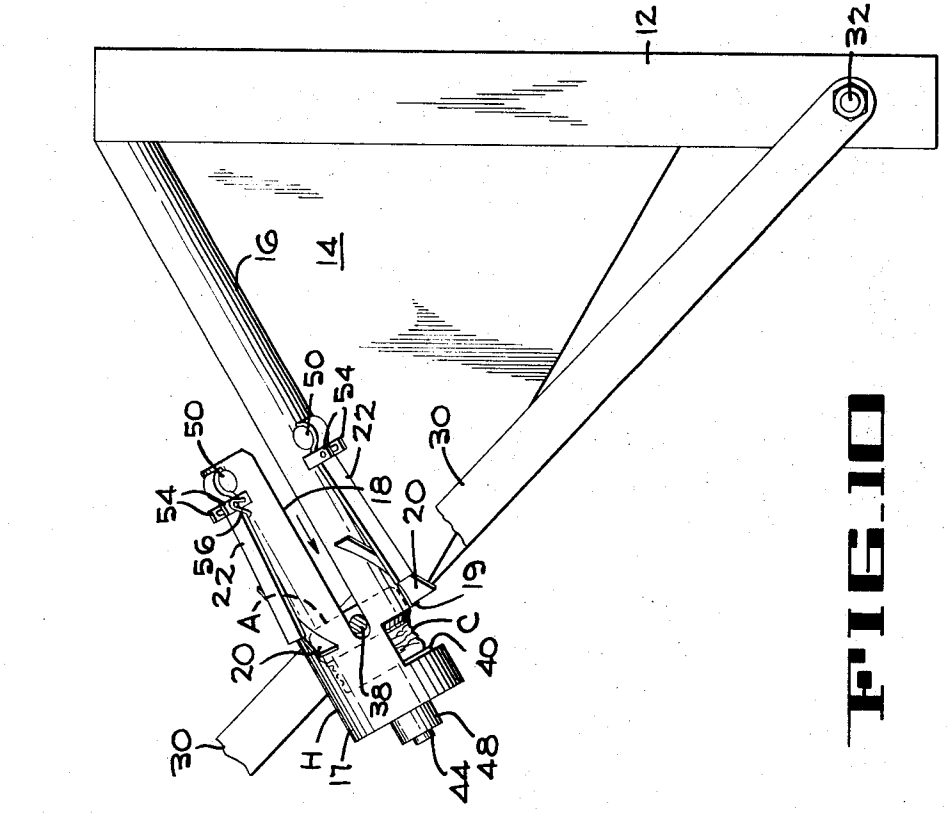
12
32
16
14
50
54
22
18
30
20
19
56
A
C
40
38
H
17
48
44

FIG. 10

# CONTAINER FLATTENING APPARATUS

## FIELD OF THE INVENTION

This invention relates to container flattening apparatus and more particularly to apparatus for manually collapsing containers such as tin cans to reducing their bulk for disposal.

## DESCRIPTION OF PRIOR ART

The U.S. Pat. to Wiswell 2,139,143, Dec. 6, 1938 discloses a collapsible container having a large number of overlapping helical creases performed in the container to facilitate collapsing of the container during a dispensing operation. The creases are at an obtuse angle to the axis of the can, that is, they are more parallel to the top and bottom of the can than they are to the axis. The dispensing apparatus includes a rotatable base for facilitating rotation of the can during its collapse while material is being expelled from the bottom of the can through a spout.

The U.S. Pat. to Huber et al, 3,063,140, Nov. 6, 1962 discloses an automatic can crusher wherein the cans are axially flattened but the crusher does not crease the can during the crushing operation.

The U.S. Pat. No. to Lambert 3,095,029, June 25, 1963, discloses the mounting of empty cans on a grooved mandrel with cam operated axially disposed crimpers that are pressed against the sides of a can on the mandrel coincident with the grooves therein, for forming the can into a flower pot.

The U.S. Pat. No. to Porter et al, 3,253,537, May 31, 1966, shows a power operated can crusher wherein the cans are axially flattened by means of a screw rotated crushing head. The side of the can is not creased during the crushing operation.

## SUMMARY OF THE INVENTION

The container collapsing apparatus of the present invention can be considered to utilize some of the advantages inherent in the dispensing apparatus of Wiswell 2,139,143. However, in accordance with the present invention creases are formed in the sidewall of the can by the can flattening apparatus itself, these creases being formed just before the actual flattening of the can is initiated. Furthermore, the creases instead of being at an obtuse angle to the can axis as in the aforesaid Wiswell patent, are at an acute angle to that axis, that is, the creases are closer to being parallel with the can axis than to the top or bottom end of the can. Thus only a few relatively long creases are required, because of their acute angle disposition and the creases do not need to overlap as in the Wiswell patent. This construction simplifies the creasing mechanism and does not unduly weaken the can housing.

To summarize the invention more specifically and by way of an actual example, load tests show that an empty 12 ounce aluminum can, size 211 by 414 will support over 200 pounds applied to the top of the can in an axial direction. This high load carrying capacity results from the strength developed by the cylindrical wall with a can body.

However, if the body of the can is creased diagonally at four equally spaced circumferential zones along an acute angle to the axis of the can, the force required to flatten the can axially is reduced to a value of about ten to fifteen pounds, providing one end of the can is free to rotate about the can's axis to accommodate the effect of the collapsing action. During the actual collapsing of a can thus creased by the apparatus of the present invention just before collapsing begins, the can body compacts in a straight axial direction with the excess of body materials being folded radially inwardly at equal intervals around the can body which folding results in rotation of one end of the can body with respect to its opposite end and which rotation is accommodated by a rotatable member engaging one end of the can and preferably formed at the base of the housing that supports the can during the collapsing operation. The use of a few acute angle creases in the can wall results in each crease becoming deeper and much wider during flattening, so that the creases readily gather in the sidewall material during flattening. This reduces the force required to flatten.

It is a feature of the present invention that the apparatus forms the aforesaid creases in the cylindrical can wall just before actual collapsing starts. The simple and preferred apparatus for forming these creases comprises the provision of four creasing blades diagonally disposed and extending through apertures in the housing of the apparatus. These blades are mounted on pivot arms and the outer ends of the arms have cam followers that project through apertures in the outer end of the cam housing. The cam followers are engaged by a cam surface on the periphery of the anvil that provides the crushing action. The anvil is pivotally mounted on a lever arm that is manually pulled down to compress the can between the anvil and the base of the housing. Thus, in accordance with the present invention, once the can is dropped into the housing, a simple swing of the anvil towards the base of the housing first creases the can and then collapses it, it being understood that before the collapsing action takes place, the construction is such that the creasing blades are withdrawn from the can to prevent interference with rotation of the can during the flattening operation.

## BRIEF DESCRIPTION OF THE DRAWINGS

FIG. **1** is a diagrammatic exploded view showing a can to be collapsed after the wall of the can has been creased. The anvil spacing from the can is exaggerated.

FIG. **2** shows an early stage in the collapsing operation.

FIG. **3** shows a collapsed can.

FIG. **4** is a partial enlarged section through the housing and taken through an opposed pair of creasing blades, although the blades and their mountings are shown in full.

FIGS. **5** and **6** are sections taken as indicated in FIG. **4**.

FIG. **7** is a partial section showing retraction of a creasing blade as the can collapsing action begins.

FIGS. **8–11** are operational diagrams of the apparatus.

## DETAILED DESCRIPTION

Reference is first made to FIGS. **1–3** which illustrate diagrammatically the flattening or collapsing action provided by the apparatus of the present invention.

FIG. **1** shows a can such as a beer can C, supported on a rotatable or swivel base B and confronted by a manually operable anvil A. Four diagonal creases **10** have been formed in the cylindrical wall of the can and at an acute angle to the can axis.

In FIG. 2, the previously creased can has been engaged by the anvil A and the flattening action has been initiated. The excess material that would result from the actual flattening of the can is being accommodated and gathered into initially wide folds developed at the creases **10.** This action would naturally tend to rotate one end of the can relative to the other. However, since the base B is rotatably mounted it rotates with the can, as indicated by the arrow in FIG. 2. The result of the crease formation is that the collapsing action requires very little force, as previously mentioned.

In FIG. 3 the can is completely collapsed to about 20 percent of its original height and is ready for discharge and disposal.

FIG. 8 illustrates additional elements of the can flattening apparatus of the present invention. The apparatus is mounted on a post **12** which can be secured, by means not shown, to a wall or the like. A can housing H is secured to the post **12** principally by a web **14** extending between the housing and the post **12.** The housing comprises a semi-cylindrical chute portion **16** leading to a can confining portion **17** that is somewhat longer than the cans to be flattened. The housing portion **17** is slotted at **18** to receive trunnions on the anvil A. The lower end of the housing portion **17** is notched at **19** for discharge of the flattened cans.

Four diagonally disposed creasing blades **20** are mounted on pivot arms **22** in a manner to be described in detail presently. These blades are substantially centered along the length of an average can, and extend over about one half of the can length.

In order to reciprocate the anvil A during the flattening operation, spaced lever arms **30** (FIGS. 5 and 8) have their lower ends pivoted at **32** to the post **12** and the arms are connected at their upper ends by a handle bar **34.** The arms **30** are slotted at **36** to receive oppositely projected trunnions **38** on the flattening anvil A. The slots **18** in the housing H previously described receive the anvil trunnions **38** as seen in FIG. 5.

The swivel or rotatable mounting for the housing base B is illustrated in detail in FIG. 4. The base includes a flange **40** that is rotatable within the lower end of the housing H and makes a free running fit with the housing wall. The flange **40** is backed up by a thrust bearing **42** and is retained in the housing by means of a stub shaft **44** that projects through an aperture in the end wall **46** of the housing and is secured by a collar **48.** With this construction free rotation of the can during the flattening operation is accommodated.

In accordance with the present invention, the creasing blades **20** are forced into the cylindrical wall of the can to form the preliminary creases **10** before the flattening action is initiated. This creasing action is provided by bringing the peripheral surface of the anvil A under cam follower balls **50** (FIG. 4) which are mounted between the outer ends of the creasing blade arms **22** and the concave walls of apertures **51** formed in the housing. The arms **22** are pivotally mounted on the housing H by means of pivot pins **52** that are welded to the arms and which extend through ears **54** ejecting radially from the housing. A torsion spring **56** exerts a force between one of the ears **54** and the blade mounting arm **22** in a direction which retracts each creasing blade **20** so that cans can be introduced into the housing H without interference from the creasing blades.

The blades **20** are shown in their initial, retracted positions in FIG. 8. FIG. 4 illustrates how advance of the anvil A by the operator using the lever arms **30** to a position beneath the cam follower balls **50,** forces or cams the blades **20** radially inwardly to form the initial creases **10** in the wall of the can. FIG. 7 illustrates how, after the anvil A has advanced into engagement with the end of the can for initiating the flattening operation, the anvil clears the cam follower balls **50** on the blade arms **22** and permits the blades **20** to again retract clear of the can, under the force of the torsion springs **56.** Thus, flattening of the can and the attendant deepening of the creases **10** takes place without blade interference.

## OPERATION

FIGS. 8–11 illustrates certain critical steps in an operating cycle.

In FIG. 8, the can C has been dropped into the chute portion **16** of the housing H and is moving down into the housing portion **17** either by gravity, or by assistance from the operator. The lever arms **30** have been retracted and the springs **56** for the blade arms have withdrawn the blades **20** in order to clear entry of the can into the housing.

In FIG. 9 the can is in the housing portion **17,** and the operator has pulled down the arms **30,** thereby moving the anvil A into engagement with the cam follower balls **50** on the blade arms **22.** This has caused the blades **20** to be forced or cammed radially inwardly into the cylindrical wall of the can C to form the creases **10,** as previously described in connection with FIG. 1. The anvil has not yet engaged the top of the can.

Further advance of the arms **30** brings the anvil A against the top of the can as shown in FIG. 7 at which time the anvil clears the cam follower balls **50** on the blade arms **22** and permits the springs **56** to retract the blades **20** to clear the can, as previously described.

The operator now manually pulls the anvil A towards the base B of the housing H to flatten the can and during this operation the creases **10** are widened and deepened to gather excess material caused by reduction in can length as shown diagrammatically in FIG. 2.

FIG. 10 shows completion of the flattening operation wherein the lever arms **30** have been fully advanced to bring the anvil A as far down as it can go with exercise of reasonable force, which will reduce the can to about **20** percent of its original length. This condition is shown in FIG. 10. The sidewalls of the creases **10** have now been brought together.

In FIG. 11, the arms **30** are being retracted, which frees the flattened can for gravity discharge through the aperture **19** formed in the housing H.

Upon withdrawal of the lever arms back to the original position of FIG. 8 a new can can be inserted for flattening operation.

Thus it can be seen that with the can flattener of the present invention a single stroke of the arms both creases the can and flattens it. Due to the disposition of the creases **10** formed by the blades **20,** and due to cooperation of the rotatable base B, the force required to flatten ordinary cans is quite small. The operation of the device is rapid and no sharp jaws or can puncturing devices are required which would become dull and might injure an operator.

Although the best mode contemplated for carrying out the present invention has been herein shown and

described, it will be apparent that modification and variation may be made without departing from what is regarded to be the subject matter of the invention.

What I claim is:

**1.** Apparatus for flattening cans of the type comprising a can confining housing having a rotatable member for engaging one end of the can, a lateral discharge throat for the flattened cans at said one end, an anvil slidable along said housing and toward a base formed in the housing for flattening cans in the housing, and means for operating said anvil; the improvement comprising a plurality of circumferentially spaced creasing blades projecting diagonally through said housing at an acute angle to the can axis, and means for pressing said blades into the cylindrical wall of a can in said housing to provide diagonal creases in the can before said anvil begins to flatten the can.

**2.** The apparatus of claim **1**, comprising means for withdrawing said blades from the can after they have creased the can and before the anvil produces any substantial flattening of the can.

**3.** The apparatus of claim **2**, wherein there are four equally spaced creasing blades.

**4.** The apparatus of claim **1**, wherein said creasing blades are disposed to be substantially axially centered on a can of average size supported by said housing base and wherein the blades extend over about one half the length of the can.

**5.** The apparatus of claim **1**, wherein said rotatable member is at the base of said housing.

**6.** The apparatus of claim **5**, comprising trunnions on said anvil, pivoted arms having slots for mounting said anvil, and slots in said housing for receiving and guiding said trunnions.

**7.** The apparatus of claim **5**, wherein said means for pressing said creasing blades into the can comprises a cam surface on said anvil, arms pivotally mounting said blades on the housing, and cam followers on the outer ends of said arms for spreading engagement with said anvil cam surface.

**8.** The apparatus of claim **7**, wherein said cam followers project through apertures in said housing for engagement by said anvil cam surface.

* * * * *