United States Patent [19]

Brandt et al.

[11] **3,774,965**

[45] **Nov. 27, 1973**

[54] **DENTAL CHAIR WITH A SWITCH ACTUATING ARM REST**

[75] Inventors: **William P. Brandt; James D. Huffman,** both of Des Moines, Iowa

[73] Assignee: **Den-Tal-EZ Mfg. Co.,** Des Moines, Iowa

[22] Filed: **Feb. 28, 1972**

[21] Appl. No.: **230,020**

[52] **U.S. Cl.** **297/417,** 297/350

[51] **Int. Cl.** **B60n 1/06**

[58] **Field of Search** 297/327, 330, 340, 297/345, 347, 359, 411–422

[56] **References Cited**

UNITED STATES PATENTS

2,581,197	1/1952	McFadden	297/359
3,172,699	3/1965	Naughton	297/417 X
3,188,043	6/1965	Dlouay	297/347 X
3,276,816	10/1966	Edwards	297/359
3,495,872	2/1970	Gielow et al.	297/340
3,578,379	5/1972	Taylor	297/330
R26,241	8/1967	Naughton	297/418

Primary Examiner—Paul R. Gilliam
Attorney—Rudolph L. Lowell

[57] **ABSTRACT**

The dental chair includes a back unit pivotally mounted on a seat unit which in turn is tiltably carried on a vertically adjustable base unit. Each unit has a corresponding reversible operating motor. An arm rest pivotally supported on the back unit is movable to an upright position to actuate a switch on the back unit for simultaneously operating the motors to move the units to relative positions to provide for an upright or seated chair position. When the arm rest is moved to an arm supporting position the switch is actuated to simultaneously operate the motors to move the units to relative positions providing for a reclined chair position. The upright position and reclined position are automatically defined by limit switches corresponding to the units and operatively associated with their respective motors.

4 Claims, 7 Drawing Figures

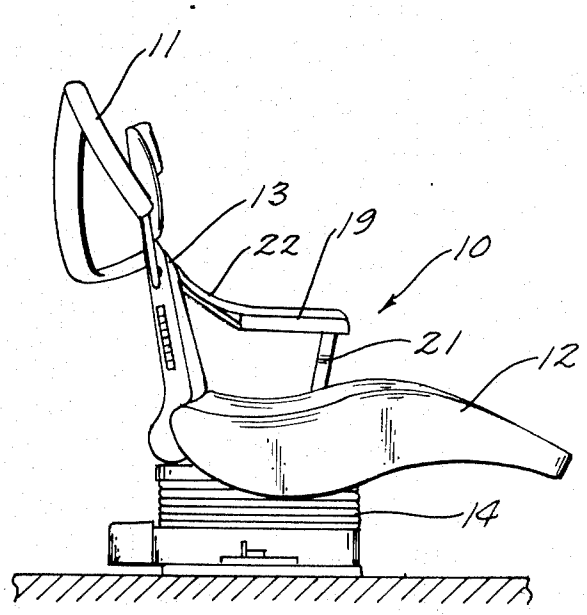

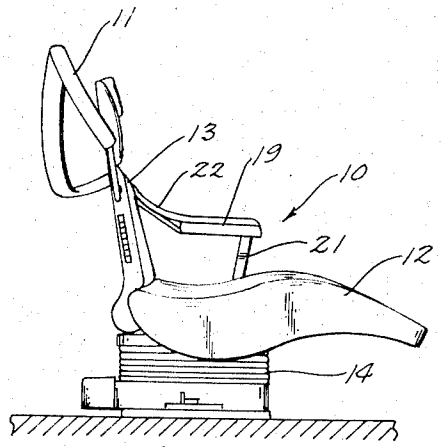

Fig. 1

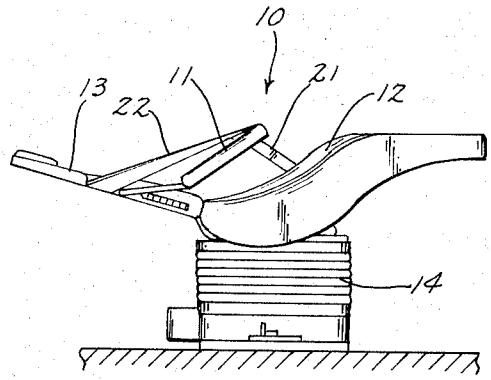

Fig. 2

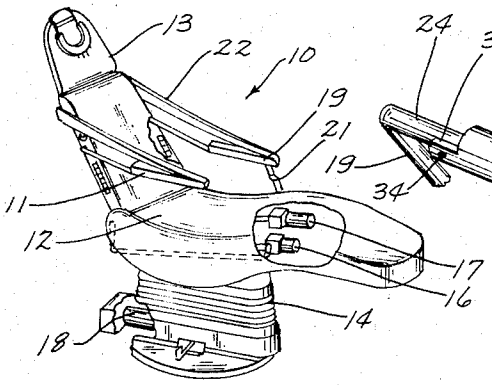

Fig. 3

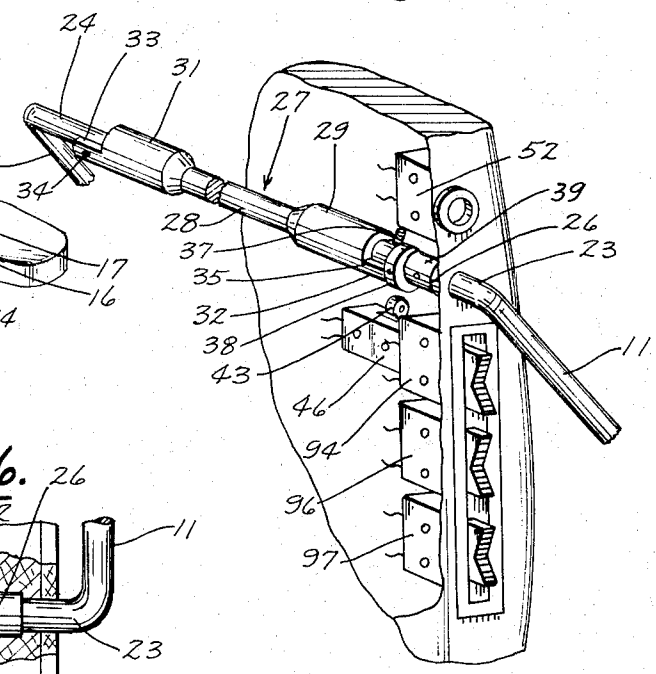

Fig. 4

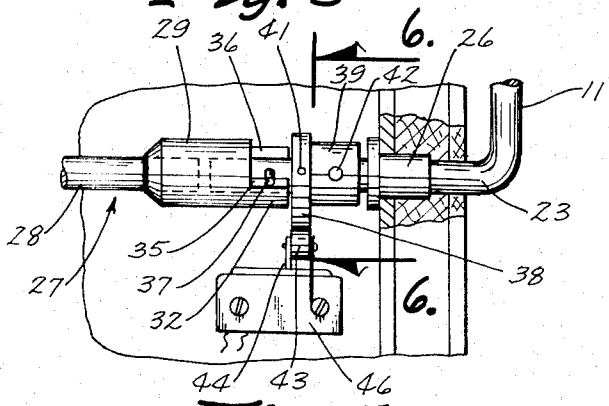

Fig. 5

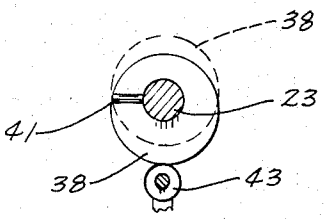

Fig. 6

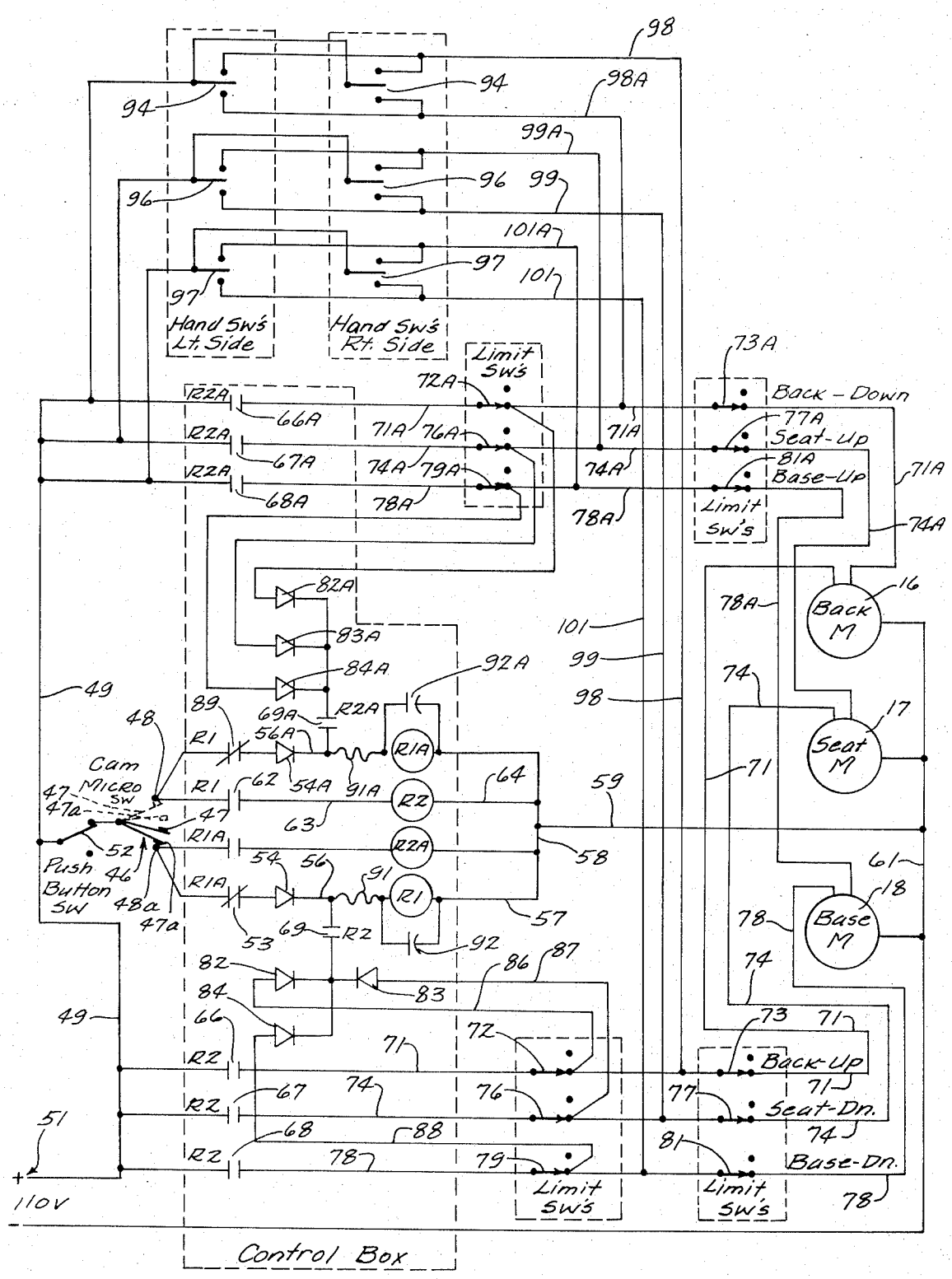
Hand Sw's Lt. Side
Hand Sw's Rt. Side
Limit Sw's
Back - Down
Seat-Up
Base-Up
Limit Sw's
Back M
Seat M
Base M
Cam Micro Sw
Push Button Sw
Back-Up
Seat-Dn.
Base-Dn.
Limit Sw's
Limit Sw's
110V
Control Box

Fig. 7

DENTAL CHAIR WITH A SWITCH ACTUATING ARM REST

SUMMARY OF THE INVENTION

The arm rest actuator provides for a simultaneous operation of all of the chair motors to automatically move the seat, back and base units to stop positions defining either a seated position or a reclined position for the chair and eliminates the necessity of the chair operator manipulating several switches whenever a person is to leave the chair or, when seated in the chair, to be moved to a reclining position. The dentist or chair operator thus has additional time for attending to the comfort of a patient or other duties requiring his attention. In the reclined position of the chair the arm rest is in an arm supporting position, and in a seated position of the chair the arm rest is extended upwardly along one side of the back unit. Thus, with a person seated in the chair, movement of the arm rest to an arm supporting position automatically provides for movement of the chair to a reclined position without requiring any further manipulation of the arm rest. Conversely, when a person is in a reclined position in the chair and is to be released from the chair, it is only necessary to move the arm rest from the arm supporting position to the upright position adjacent one side of the back unit. On movement of the chair to a seating position the arm rest remains in the upright position so as to permit the unobstructed movement of a person out of and into the chair. Chair movement to either a reclined or seated position can be interrupted by actuation of a power disconnect switch carried in the back unit or by movement of the arm rest from a then moved position thereof to its other moved position. Additionally, should the automatically provided reclined or seated chair positions require additional adjustment to accommodate the chair occupant, the several chair motors can be independently operated by independent actuation of corresponding separate switches carried on the back unit.

BRIEF DESCRIPTION OF THE DRAWINGS

FIG. 1 is a side elevation of a dental chair equipped with the switch actuating arm rest of this invention and showing the chair in an upright or seating position;

FIG. 2 is illustrated similarly to FIG. 1 and shows the chair in a reclined position;

FIG. 3 is a perspective view of the dental chair illustrated in an intermediate moved position with parts broken away to show the chair operating motors and some of the control switches;

FIG. 4 is an enlarged detail perspective view of a portion of the back unit showing the assembly therewith of the arm rest and some of the motor control switches;

FIG. 5 is an enlarged detail elevational view showing the assembly relation of the arm rest with a switch device for simultaneously operating all of the chair motors;

FIG. 6 is a sectional view taken along line 6 — 6 in FIG. 5; and

FIG. 7 is the electrical circuit for the chair motors and control switches therefor.

DETAILED DESCRIPTION OF THE INVENTION

With reference to the drawing there is shown in FIG. 1 a contour dental chair 10 equipped with the switch actuating arm rest 11 of this invention. The chair 10 has a curved leg and seat unit 12 and a back unit 13 pivotally connected at its lower end to the rear section of the seat unit 12 for pivotal movement to upright and reclined positions. The seat unit 12 is supported for longitudinal tilting movement on a vertically adjustable base unit 14. The back unit 13 (FIG. 3) is moved between its upright and reclined positions by means including a motor 16; the seat unit 13 is tiltably moved relative to the base unit 14 by means including a motor 17 and the base unit 14 is vertically adjusted by means including a motor 18. The mechanical construction of the back unit 13 and seat unit 12 of the chair 10 are disclosed in Naughton U. S. Pat. No. 3,172,699 and the construction of the vertically adjustable base unit 14 is disclosed in Naughton U. S. Pat. No. 3,472,488.

The arm rest 11 and an associated arm rest 19 (FIG. 3) are mounted on the back unit 13 for forward extension to opposite sides of the seat unit 12. An upright support 21 pivotally connected to the seat unit 12 and to the arm 19 functions to control the position of the arms 11 and 19 with respect to the back rest unit 13 on pivotal movement of the back rest unit with respect to the seat unit 12. As illustrated, each arm rest 12 and 19 is provided with a flexible arm support 22 disclosed in Naughton U. S. Pat. No. R. 26,241.

During movement of the back rest unit 13 relative to the seat unit 12, the arms 12 and 19 are arranged to maintain the arms of a patient substantially parallel with his legs whereby to maintain a comfortable position of the arms at all times regardless of the relative positions of the seat and back units. Each of the arm rests 11 and 19 is formed of a round rod material having laterally bent rearward end sections 23 and 24, respectively (FIG. 4), projected within and rotatably supported on the back unit 13 as by bearings 26, indicated only for the arm 11 in FIG. 5. The rear end sections 23 and 24 (FIGS. 4 and 5) are interconnected by a transversely extendedconnecting member 27 having a reduced central section 28 integrally formed at its ends with enlarged tubular bearings 29 and 31 for rotatably receiving therein the arm rest rear sections 23 and 24, respectively. Bearings 29 and 31 are formed at the outer ends thereof with extensions 32 and 33, respectively, of a semi-circular shape in transverse cross section and concentrically arranged with corresponding rear sections 23 and 24 of the arm rests 11 and 19, also respectively.

The rear section 24 of the arm 19 (FIG. 4) is connected by a pin 34 to the bearing 31 so that the connector member 27 is pivotally moved or rocked in response to the pivotal movement of the arm rest 19. The rear section 23 of the arm rest 11 is rotatable within its associated bearing 29 between limits defined by the engagement, with opposite ends 35 and 36 of the semicircular extension of a pin 37 projected radially from the rear section 23 of the arm 11. The upright position of the arm 11 is defined by the engagement of the pin 37 with the end 35 of the extension 32 (FIG. 5). The arm supporting position of the arm 11 is defined by the engagement of the pin 37 with the end 36 of the extension 32 (FIG. 4).

By virtue of this engageable position of the pin 37 with the extension 32 rockable movement of the arm 19, in response to the pivotal movement of the upright support 21, is transmitted to the arm 11 through the pin 37. The arms 11 and 19 are thus always maintained in positions to comfortably support the arms of a patient.

In other words, when the back unit **13** pivots backwardly and downwardly from its position in FIG. **1**, to the position therefor shown in FIG. **2**, the arms **11** and **19** are not only maintained transversely parallel and aligned but they are also moved rearwardly and lowered relative to the seat unit **12** to accommodate the changed positions of the arms of a patient. Thus, upon movement of either the seat unit **12** or the back unit **13** the arm **11**, when in the lower position of FIG. **4**, is always movable with the arm **19**.

However, it will be noted that when the arm **19** is extended forwardly, as shown in FIG. **1**, the arm **11** is movable relative thereto to an upright position along one side of the back unit **13** as illustrated in FIGS. **1** and **5**. This relative movement is permitted because the pin **37**, on upward movement of the arm **11**, from its position in FIG. **4**, is moved out of engagement with the end **36** of the semi-circular extension **32** and into engagement with the extension end **35** to its positions shown in FIG. **5**. Conversely, the arm **11** is movable relative to the arm **19** from its upright position, shown in FIG. **5**, to its forwardly extended position, shown in FIG. **4**, by movement of the pin **37** out of engagement with the end **35** and into engagement with the end **36** of the semi-circular extension **32**. It is thus seen that the arm **11** is pivotally movable relative to the arm **19** to the positions therefor shown in FIGS. **4** and **5**. Also, it will be seen that when the arm **11** is in its upright position of FIG. **5** that the arm **19** is pivotally movable relative thereto, but when the arm **11** is in its lowered position of FIG. **4**, the arms **11** and **19** are movable as a unit in response to the pivoted movement of the upright support **21**.

On movement of the arm **11** relative to the arm **19** to either position shown in FIG. **4** or FIG. **5**, the chair motors **16, 17** and **18**, which are of a reversible type, are simultaneously operated to automatically adjust the chair **10** to either the upright position of FIG. **1** or to the reclined position of FIG. **2**, depending upon the moved position of the arm **11**. Thus, when the arm **11** is in the lowered position (FIGS. **2** and **4**) movement thereof to the upright position (FIGS. **1** and **5**) automatically adjusts the chair **10** to the upright position of FIG. **1** providing for the release of the patient from, or entry into, the chair **10**. In this adjustment the motors **16, 17** and **18** are simultaneously operated to provide for a forward pivotal movement of the back unit **13**, a forward and downward tilting movement of the seat unit **12**, and a vertical retraction of the adjustable base unit **14**. On movement of the arm **11** from its upright position in FIGS. **1** and **5**, to the lowered position in FIG. **4**, the seat unit **12**, back unit **13** and base unit **14** are simultaneously moved to automatically adjust the chair to its reclined position shown in FIG. **2**.

For this purpose the rear section **23** of the arm **11** is provided outwardly from but adjacent to the bearing **29** with a circular cam **38**, the axis of which is radially offset from the axis of the arm rear section **23**. A spacing collar **39** is mounted on the section **23** between the cam **38** and the arm bearing **26**. Both the cam **38** and the collar **39** are fixed to the arm rear section **23** by set screws **41** and **42**, respectively.

The cam **38** is operatively associated with a follower roller **43** that is mounted on and forms part of an actuating unit **44** of a switch device **46** located within the back unit **13** at a position below the cam **38**. The switch device **46** is of a make-before-break type manufactured by Micro Switch of Freeport, Ill. and designated as number BZ–2GW822A2 and forms part of a symmetrical electrical system (FIG. **7**) which operates in response to pivotal movement of the arm **11** to adjust the chair **10** to either a seated position or a reclined position. Thus, let it be assumed that the chair **10** is in the reclined position of FIG. **2** and is to be automatically adjusted to the upright or seated position of FIG. **1**.

In the reclined position of the chair **10** a hold-in relay R1 (FIG. **7**), is maintained in a hold-in position by the switch device **46**. The relay R1 is of single-pole double-throw type and the one used by applicant is No. 311010–24 made by Cornell-Dubilier. On movement of the arm **11** from its lowered position in FIG. **4**, corresponding to the reclined position of the chair, to the upright position therefor in FIG. **5**, the roller **43** of the switch device **46**, is engaged by the arm cam **38**, as shown in full lines in FIG. **6**, to move a first spring contact finger **47** (FIG. **7**) thereof into engagement with a terminal **48** to close the circuit for a four-pole double-throw relay R2. This relay is also available from Cornell-Dubilier as No. A1–04A0–115V. However, due to the make-before-break characteristic of the switch device **46** a second spring contact finger **47*a*** thereof continues to engage a terminal **48*a*** of the hold relay R1. The hold circuit for the relay R1 from one side or lead **49** of an electrical source **51** includes a power disconnect or master switch **52**, the contact finger **47*a***, normally closed contacts **53** of a relay R1A, a diode **54**, and lines **56, 57, 58** and **59** to a lead line or ground **61** of the electrical source **51**. The relay RlA is identical in all respects to the relay R1.

The hold of relay R1 provides for the closing of its normally open contacts **62**, so that on engagement of the spring contact **47** with the terminal **48** the circuit for activating the relay R2 from the terminal **48** includes the contacts **62**, line **63**, relay R2 and lines **64, 58** and **59** to the lead line **61**. Energization of the relay R2 provides for the closing of its normally open contacts **66, 67** and **68** to provide for the operation of the chair motors **16, 17** and **18**, respectively. Concurrently, the normally open contacts **69** of the relay R2 are closed for a purpose to appear later.

As shown in FIG. **7** the circuit for the back unit motor **16** from the lead line **49** includes the contacts **66**, line **71**, having connected therein normally closed limit switches **72** and **73**, motor **16** and lead line **61**. In like manner the circuit for the seat unit motor **17** includes the contacts **67**, line **74**, having limit switches **76** and **77**, motor **17** and lead line **61**. Similarly, the circuit for base unit motor **18** comprises the contacts **68**, line **78**, having limit switches **79** and **81**, motor **18** and lead line **61**. The closing of the circuits for the motors **16, 17** and **18** provides simultaneously for a forward pivotal movement of the back unit **13**, a forward and downward tilting movement of the seat unit **12**, and a retractible movement of the base unit **14** to relative adjusted positions defining an upright or seated position of the chair **10** as shown in FIG. **1**. The adjusted position of the chair units **12, 13** and **14** is determined by the selected positioning of the limit switches **72, 76** and **79**, respectively, in the paths of movement of the chair units **12, 13** and **14**. As a result, opening of the normally closed limit switches **72, 76** and **79**, in turn, open the circuits of their associated motors **16, 17** and **18**, respectively.

The closing of the circuits for the chair motors **16, 17** and **18** simultaneously energizes diodes **82, 83** and **84** for supplying current to relay **R1.** The diodes are of a common readily available type known as IN2070. Each diode **82, 83** and **84** is connected in an associated line **86, 87** and **88,** respectively, each of which has one end connected to a corresponding line **71, 74** and **78,** also respectively, at a position between corresponding pairs of limit switches in the lines **71, 74** and **78.** The opposite ends of the diode lines **86, 87** and **88** are connected to one side of the normally open contacts **69** of the relay **R2.** The opposite side of the contacts **69** is connected to line **56** at a position to supply current to relay **R1.**

With the closing of the circuits for the motors **16, 17** and **18** and the diodes **82, 83** and **84,** the spring contact finger **47a** of the switch device **46** will have moved out of engagement with the terminal **48a** to a position adjacent to the spring contact finger **47.** The switch device **46** has thus moved to what may be referred to as the **R1A** and **R2** relays side of the symmetrical circuit. However, since the normally open contacts **69** of the relay **R2** are closed, the circuits for the diodes remain energized to provide for a continued holding action by the relay **R1.**

On opening of the limit switches **72, 76** and **79** to stop the operation of their respective motors **16, 17** and **18,** the circuits for the diodes **82, 83** and **84** are simultaneously opened whereby further current flow from the diodes to the relay **R1** is discontinued. As a result of this current discontinuance, the relay **R1** is de-energized to in turn provide for a de-energization of relay **R2** by the return of the contacts **62** of relay **R1** to a normally open position. However, relay **R1A** will continue to hold by virtue of the supply of current thereto through the normally closed contacts **89** of the relay **R1.** The diodes **82, 83** and **84** have the characteristic of permitting only a uni-directional flow of current therethrough so as to prevent current feed back. If a feed back current was permitted the operation of a motor **16, 17** or **18** would be continued after the opening of anyone of the limit switches **72, 76** or **79.**

Additionally, it will be noted that the holding circuits for the relays **R1** and **R1A** are operated at 24 volts D. C. from the source **51** of 110 volts A.C. This operation takes place by the use of the diodes **54** and **54A** connected into the lines **56** and **56A,** respectively. These diodes lower the 110 volt A. C. to approximately 35 volt half-wave D. C. Resistor **91** and **91A** then drop the voltage supplied to the relays **R1** and **R1A,** respectively, to approximately 24 volts. Capacitors **92** and **92A** for the corresponding relays **R1** and **R1A** then smooth out the half-wave D. C. current to eliminate buzzing in the relays. As a result, the relays **R1** and **R1A** are capable of being operated continuously over extended periods of time without becoming overheated.

When the arm rest **11** is moved from its upright position in FIG. **5** to its lowered position in FIG. **4,** the cam **38** moved out of engagement with the roller **43,** as shown in dotted lines in FIG. **6,** to provide for the return movement of the spring contact fingers **47** and **47*a*** of the switch device **46.** This return movement of the contact fingers **47** and **47*a*** provides for the other half of the symmetrical electrical system functioning in the same manner as the half of the electrical system just described in connection with the movement of the arm rest **11** from its lowered position to the upright position therefor. Similar numerals therefor having a suffix letter A have been used to designate the like parts in the half portion of the electrical system that was not hereinabove specifically described.

It is seen, therefore, than when the arm **11** is in the upright position the relay **R1A** is always in the hold position along with providing for the energization of the relays **R2** and **R1** to control the operation of the motors **16, 17** and **18.** On movement of the arm **11** to a lowered position, the relay **R1A** through the make-before-break action of the switch device **46** remains momentarily energized to provide for the energization of the relays **R2A** and **R1,** after which the circuit for the relay **R1A** is broken. When this break occurs the relay **R1** holds until the arm rest **11** is again moved from a lowered to an upright position. A reverse movement of the arm **11** relative to the switch device **46** thus provides for an automatic movement of the chair units **12, 13** and **14** to upright or reclined positions therefor without requiring any further attention by the chair operator.

The power disconnect switch **52** functions as a master switch to connect and disconnect the switch device **46** relative to the electrical source **51** or, when necessary, to immediately interrupt the movement of the chair between the upright and reclined positions therefor. Let it be assumed that the arm **11** is in its upright position providing for movement of the chair **10** to an upright or seated position. Let it be further assumed that this movement is interrupted by actuation of the switch **52** to disconnect the switch **46** from the power source **51.** If the movement of the chair **10** to its seated position is to be continued, the arm **11** must first be moved from the upright position to the lower or forwardly extended position thereof, after which the disconnect switch **52** is again immediately actuated. On then resetting the arm in its upper position the chair **10** will continue movement toward the upright or seated position therefor.

This relative sequence of actuation of the arm **11** and disconnect switch **52** is required because of the make-before-break characteristic of the switch device **46.** It will be understood, of course, that movement of the chair **10** between its upright and inclined positions can be interrupted or stopped at any time merely by movement of the arm **11** to one or the other of its moved positions shown in FIGS. **4** and **5.**

It will be appreciated that the automatic movement of the chair **10** to a reclined or seated position may require further adjustment of the chair units **12, 13** and **14** to accommodate different size patients. To provide for this additional adjustment, the automatically moved positions of the chair units, as determined by the limit switches **72, 76** and **79** and **72A, 76A** and **79A,** are within the maximum range of movements for the chair units.

The maximum range of movements is controlled by the limit switches **73, 77** and **81** and **73A, 77A** and **81A.** Thus, assume that the chair **10** has been moved to either its reclined position or upright position and that additional adjustment is required. As shown in FIGS. **3** and **4,** each side of the back unit **13** carries a series of three vertically arranged like manually actuated switches **94, 96** and **97** of single-pole double-throw type. The switches **94** (FIG. **7**) are connected directly to the lead line **49** and in parallel between lines **98** and **98A** which are connected to lines **71** and **71A,**

respectively, between the limit switches **73** and **73A**, also respectively. Depending upon the actuated position of a switch **94**, the back unit motor **16** will be operated to pivotally move the back unit **13** either forwardly or rearwardly to a desired position or until further movement is arrested by opening of one of the limit switches **73** or **73A**. In a like manner the switches **96** are connected to the seat motor **17** through lines **99** and **99A**, lines **74** and **74A** and limit switches **77** and **77A**, all respectively; and the switches **97** are connected to the base motor **18** through the lines **101** and **101A**, lines **78** and **78A** and limit switches **81** and **81A**, all respectively.

It will, of course, be understood that the manual switches **94, 96** and **97** may be actuated to move the chair **10** to an adjusted position so long as the disconnect switch **52** is in its circuit opening or power disconnect position.

Although the invention has been described with respect to a preferred embodiment thereof, it is to be understood that it is not to be so limited since changes can be made therein which are within the full intended scope of this invention as defined by the appended claims.

We claim:

1. A dental chair comprising:

a. a back unit, a seat unit and a base unit each of which is operatively associated with a corresponding reversible motor means and wherein the back unit is pivotally movable relative to the seat unit, the seat unit is longitudinally tiltable relative to the base unit and the base unit is vertically adjustable,

b. an arm rest pivotally mounted on said back unit for manual pivotal movement to a first position extended upwardly along one side of said back unit and to a second position projected forwardly from said one side of the back unit, and

c. an electrical control circuit for said motor means including a single switch device on said back unit having an actuating lever movable, in response to the movement of said arm rest to the first position therefor to a first circuit closing position to simultaneously operate said motor means in one direction of rotation to move said units to relative positions providing for the support of a person in an upright seated position, and movable, in response to the movement of the arm rest to said second position therefor to a second circuit closing position to simultaneously operate said motor means in an opposite direction of rotation to move said units to relative positions providing for the support of a person in a reclined position, and

d. normally closed limit switches in said control circuit corresponding to said motor means and mounted on the chair for engagement by corresponding ones of said units to automatically stop said motor means to define said relatively moved positions of said units.

2. The dental chair according to claim **1** wherein:

a. said circuit includes a manually actuated control switch unit mounted on said back unit operable to connect and disconnect said single switch device relative to a source of electrical power.

3. The dental chair according to claim **2** wherein:

a. said circuit includes a plurality of normally open manually actuated switch means on said back unit and corresponding to said motor means, for connecting said motor means directly to said source of electrical power,

b. said switch means, when said back unit, seat unit and base unit are in one or the other of said relatively moved positions, being selectively actuated to move said back unit, seat unit and base unit independently of each other to final adjusted relative positions therefor.

4. The dental chair according to claim **3** wherein:

a. said circuit includes other normally closed limit switches mounted on said chair corresponding to said motor means, with each of said other limit switches connected in series with a corresponding one of said manually actuated switch means to limit the movement of said back unit, seat unit and base unit to maximum moved positions therefor in response to an actuation of said manually actuated switch means.

* * * * *