United States Patent [19]

Chernowitz

[11] **3,767,208**

[45] **Oct. 23, 1973**

[54] **SOUND CARD AND SOUND APPARATUS FOR MULTI-CHANNEL USE**

[76] Inventor: **Maurice E. Chernowitz,** 91 Payson Ave., New York, N.Y. 10034

[22] Filed: **Jan. 4, 1971**

[21] Appl. No.: **103,589**

[52] **U.S. Cl.** ..... **274/4 J,** 35/35 C
[51] **Int. Cl.** **G11b 5/80,** G09b 5/04
[58] **Field of Search** ..... 274/4 J, 41.4; 35/35 C; 40/8 A, 28.1

[56] **References Cited**

UNITED STATES PATENTS

3,678,212	7/1972	Wild	274/4 J
2,603,006	7/1952	MacChesney et al.	274/4 J
3,107,089	10/1963	Lockey	271/52
2,822,425	2/1958	Hicks	274/4 J
3,550,741	12/1970	Sherman	271/52

Primary Examiner—Louis R. Prince
Assistant Examiner—Steven L. Stephan
Attorney—Sandoe, Hopgood & Calimafde

[57] **ABSTRACT**

This invention relates to audio apparatus in which a card having a magnetic sound track, or other type sound track, extends parallel to an edge of the card and simple manual operated means produce relative movement of the card and a sound head. One embodiment uses a power drive to obtain a more uniform rate of relative movement. The card is the record, and the edge of the card extends against a wall of a guideway to keep the sound track parallel to the direction of relative movement of the card with respect to the sound head. Extra length of reproduction is provided on the card, when desired, by having multi-channel tracks or continuous track with reverse runs and means for maintaining the sound head operative on the selected channel at various times during the operation of the apparatus.

11 Claims, 6 Drawing Figures

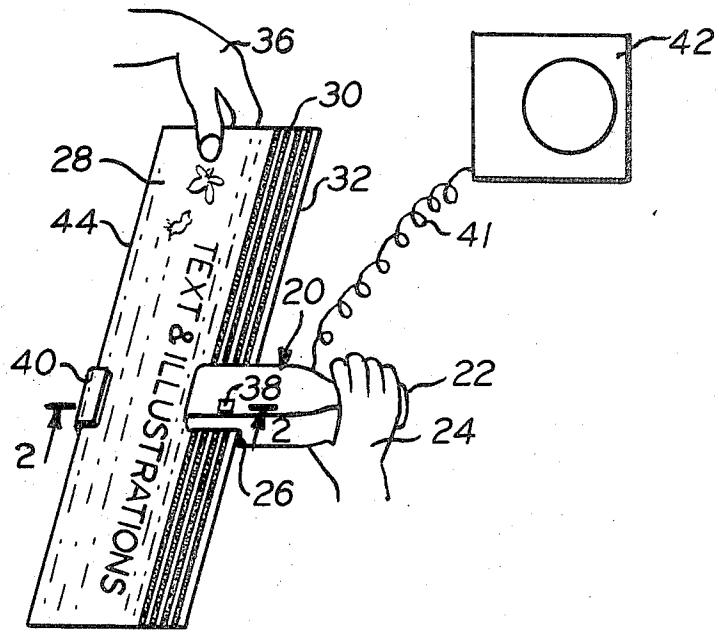

FIG. 1.

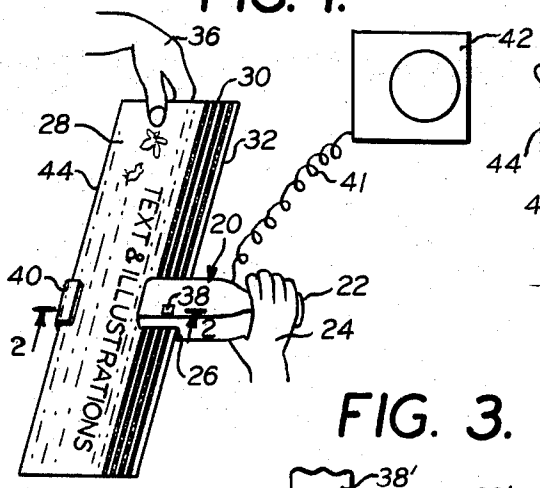

FIG. 2.

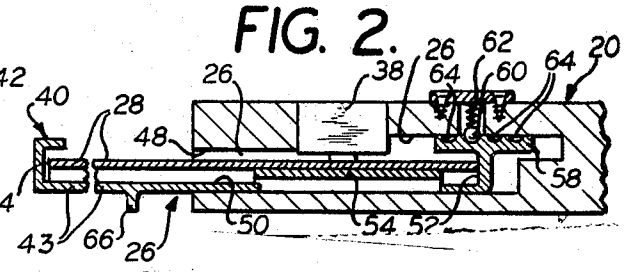

FIG. 3.

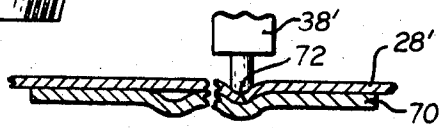

FIG. 5A

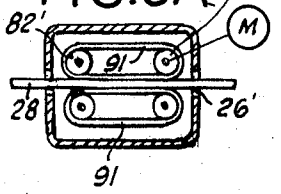

FIG. 4.

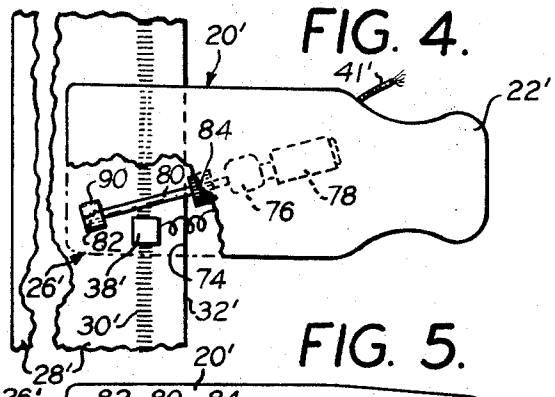

FIG. 5.

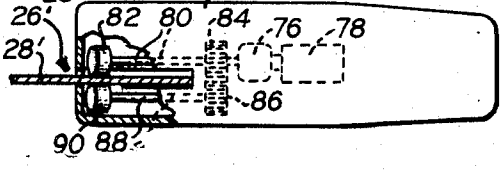

INVENTOR
Maurice E. Chernowitz
BY Sandoe, Hopgood & Calimafde.
ATTORNEYS

SOUND CARD AND SOUND APPARATUS FOR MULTI-CHANNEL USE

BACKGROUND AND SUMMARY OF THE INVENTION

One object of this invention is to provide an audio apparatus that is not only for simpler construction than card-operated devices of the prior art, but which can be used without any stationary support; that is, with the record card held in one hand and the sound head support held in the other hand. To make such apparatus practical and convenient to use, it is essential that adequate guiding of the card be provided.

In one embodiment of the invention, the card extends into a guideway having top and bottom walls and having a connecting wall between them constituting a channel open at both ends and long enough to keep the sound track on the card in alignment with the direction of movement of the card with respect to the sound head. Either the sound head or the card can move or they can both move at the same time in opposite directions while held in opposite hands of an operator using the invention.

Another embodiment holds an edge of the card against the wall of a guideway by means of canted rollers that urge the card toward the wall but which slip transversely to permit the card to move parallel to the wall after contact with it.

Various constructions obtain operation of the apparatus on transversely spaced channels of a sound track on a card. This may include sound heads adjacent transversely with respect to the card guide or fixed transversely with multiple contacts on the track channels, which contacts are made effective selectively in the desired sequence according to the order in which the respective channels are recorded.

When a sound head reverses its direction of relative movement with respect to a track, various expedients terminate the reproduction during the time that the sound head is slowing down, is stopped, and is accelerating to reproduction speed. In some constructions the sound track has silent portions at reversal locations; in others, the mechanism guide means lifts the sound head out of contact with the track; and in another embodiment there is automatic switching off and on of the sound head at the beginning and end of the reversal section of the guideway.

Other objections, features and advantages of the invention will appear or be pointed out as the description proceeds.

BRIEF DESCRIPTION OF THE DRAWING

In the drawing, forming a part hereof in which like reference characters indicate corresponding parts in all the views:

FIG. 1 is a diagrammatic, isometric view showing this invention and the manner in which it is operated manually;

FIG. 2 is a greatly enlarged, fragmentary sectional view taken on the line 2—2 of FIG. 1;

FIG. 3 is a fragmentary diagrammatic view showing a modified construction for maintaining the card in contact with the sound head in the apparatus FIGS. 1 and 2;

FIG. 4 is an enlarged, diagrammatic, top plan view of a modification of the construction shown in FIG. 1;

FIG. 5 is an elevation, partly broken away and in section of the construction shown in FIG. 4;

FIG. 5A is a modification of the structure shown in FIGS. 4 and 5.

DESCRIPTION OF PREFERRED EMBODIMENTS

FIG. 1 shows a frame 20 having a grip portion 22 by which it can be conveniently held by one hand 24 of an operator. There is a guideway 26 formed in one end of the frame 20 and this guideway faces away from the grip portion 22 so that a card 28 can be conveniently inserted into the guideway.

The card 28 has a sound track 30 on its top surface extending parallel to a longitudinal edge 32 of the card. The guideway 26, in the frame 20, is a channel with top and bottom walls and a center wall against which the edge 32 contacts. This channel construction will be explained more fully in connection with FIG. 2 but for the present it should be noted that the card 28 is substantially longer than the guideway 28, but the guideway has a center surface in contact with edge 32 along sufficient length of the edge to hold the edge 32 parallel to the center surface of the guideway while the card 28 is being held in the operator's other hand 36.

The frame 20 carries a sound head 38 which contacts with the sound track 30 on the card 28 for recording or reproducing sound as the case may be. The sound head 38 is connected by a flexible conductor cable 41 to sound recording or reproducing means 42 which may be at a stationary location. If desired, the frame 20 can be constructed with a speaker, batteries, and necessary circuitry to form a self-contained portable audio unit for cooperation with the sound track 30. The sound recording or reproducing apparatus 42 forms no part of the present invention and no illustration of its circuitry is necessary for a complete understanding of this invention.

From FIG. 1 it will be apparent that the record card 28 can be held stationary by the hand 36 while the frame 20 is moved along the edge of the card. or the frame 20 can be held stationary by the hand 24 while the other hand 36 moves the record card to obtain the relative movement of the card and sound head. Also, it is a natural movement for the operator to move both hands 24 and 36 simultaneously in opposite directions to obtain the necessary relative movement of the card 28 and the sound head 38 and this movement with both hands provides for more convenient control of the relative speed to maintain the desired pitch of the sound produced by the apparatus.

The optimum length of the center surface of the guideway 26 which contacts with the edge 32 of the card 28 depends upon the size of the card and particularly upon the width of the card at right angles to the guiding edge 32 and also depends upon whether the card 28 is guided along two edges or only along one edge.

The frame 20 shown in FIG. 1 has a guideway extension 40 with a bottom wall 43 extending across the bottom surface of the card 28 and the extension 40 then extends upward around an edge 44 of the card and inward across a limited part of the top surface of the card to form a channel guideway for the card edge 44. The edges 32 and 44 are parallel and so are the center surfaces of the channels which contact with these edges 32 and 44. The distance between these confronting center

surfaces of the channels at opposite sides of the card 28 is substantially equal to the width of the card but with running clearance so that the card can pass through the channels freely while still being confined transversely to such a limited transverse movement that the sound track always remains under the sound head 38.

The frame 20 can be made without the guideway extension 40 and when so constructed, the bottom surface of the channel of the guideway 26 is preferably substantially the same extent as the top surface.

If the frame 20 is to be used without the guideway extension 40, then the length of the guideway 26 must be sufficient to enable a person holding the card and frame in different hands to maintain alignment of the card conveniently. It should be at least about one-half the card width and greater length is better.

If the frame 20 is made with the guideway extension 40, the length of the guideway 26 for the channels on both sides of the card must be long enough to prevent the card from becoming "cocked" when running in the confronting channels as bearings. A length in excess of about one-half the width of the card can be used and preferably a greater length.

FIG. 2 shows the portion of the frame 20 which holds the card 28. In the construction shown in FIG. 2, the guideway 26 is adjustable transversely to move the card 28 transversely with respect to the sound head 38 so as to reproduce different channels 46 of the sound track 30.

The guideway 26 has the top wall 48 and in the construction illustrated in FIG. 2 has a bottom wall 50 and an end wall or center surface 52 that contacts with the edge 32 of the card 28. The bottom wall 50 which constitutes part of the bottom wall 43 of the extension 40, is made of resilient sheet material and has a tongue portion 54 formed with an upward bias for holding the card 28 in contact with the sound head 38.

The end wall 52 has a top flange 58 in sliding engagement with the top wall 26; and there is a detent comprising a ball 60 held against the flange 58 by a compression spring 62. There are depressions 64 in the top surface of the flange 58 and with which the ball detent 60 engages to hold the flange 58, the end wall 58 and the connected structure against transverse movement.

Each of the depressions 64 corresponds with a different channel of the sound track so that the ball detent 60 holds the guideway, and the card 28, in position for one or another of the sound channels to register with the sound head 38 for each depression 64 with which the detent 60 engages.

The tongue 54 is struck out of the bottom 50 and is, therefore, of one piece with it; and the tongue 54 extends in the direction of movement of the card 28 through the guideway and is wide enough to be under the sound head 38 regardless of the adjustment of the flange 58 with respect to the detent 60. A handle 66 on the under side of the bottom wall 43 can be used for moving the guideway to engage the detent 60 with different depressions 64.

When the frame 20 is made without the adjustable feature for adjusting the card 28 transversely under the sound head 38, then the channel of the guideway 26 is formed by the fixed structure of the frame 20 and can be made with less distance between the top and bottom walls than that shown in FIG. 2. Some resilience for maintaining the card in contact with the sound head can be provided by the resilience of the card itself as shown in FIG. 3.

In FIG. 3 a sound head 38′ engages a card 28′ resting on a bottom wall 70 of a guideway. The portion of the bottom wall 70 immediately below the sound head 38 has a depression 72 in its supporting surface so that the card 28′ is unsupported immediately under the sound head 38′ until the card is deflected downward into the space under it provided by the depression 72. This deflection bends the card and the resiliency of the card resists the deflection and thus maintains a pressure between the card and the sound head so as to hold the sound track in firm contack with the sound head. The degree of pressure can be determined for the thickness of the card by having a wider or narrower depression 72. This expedient shown in FIG. 3 for maintaining contact of the sound head with the card can be used with any of the other modifications of the invention shown in other figures of the drawing.

FIGS. 4 and 5 show another modified form of the invention. Parts corresponding to the construction shown in FIG. 1 are indicated by the same reference character with a prime appended. The frame 20′ has a channel with an end wall or center surface 74 with which a card edge 32′ contacts to maintain a sound track 30′ under a sound head 38′ while the card 28′ is moved with respect to the frame 20′. The construction shown in FIG. 4 has no extension of the guideway for contact with the other side of the card 28.

In FIGS. 4 and 5, there is a motor 76 powered by a battery 78 and connected by a shaft 80 to a roller 82 that bears against the top surface of the card 28′. A gear 84 on the shaft 80 meshes with another gear 86 on a shaft 88 which rotates a roller 90 in contact with the bottom surface of the card 28′. The rollers 82 and 84 are located in substantially vertical alignment with one another and thus provide a roll pass through which the card 28′ moves. The shafts 80 and 88 have suitable bearings which are omitted in the drawing for clearer illustration; and the rollers 82 and 90 have resilient surfaces which grip the card with sufficient friction to advance it along the guideway 26′ as the rollers rotate.

The rollers 82 and 90 are preferably canted with respect to the edge 32′ of the card 28′ so that these rollers urge the card toward the center surface 74 and thus maintain the card inserted fully into the guideway channel. This canted attitude of the rollers 82 and 90 is exaggerated in FIG. 4 for clearer illustration. It requires some slippage of the rollers on the surface of the card but the slippage is uniform and does not affect the speed with which the card is driven through the guideway. The speed at which the card advances is the component of the peripheral movement of the roller surfaces that is parallel to the surface 74 of the guideway.

If desired, the rollers 82 and 90 can be located in the frame 22′ without the canted attitude illustrated and when so used they serve to control the speed of the sound track with respect to the sound head without serving the additional function of urging the card against the end surface 74 of the guideway.

Another feature of the rollers 82 and 90 is that their location along the length of the guideway 26′, that is, in the direction in which the sound track moves through the guideway, is substantially the same as that of the sound head 38′. Thus the card 28′, which is advanced into the guideway 26 from the upper end by hand, reaches the rollers 82 and 90 at substantially the

same time that it reaches the sound head 38'. The rollers take over the speed of the advance of the card, therefore, as soon as the card is moved far enough for the speed of movement to become significant; that is, as soon as the sound track has reached the sound head 38. The advantage of having the rollers 82 and 90 at this location is that they continue to advance the card at a controlled speed until the last part of the sound track has passed under the sound head 38'. With the rollers at any other location, they would not function to control the advance of the card during the entire period that the sound track is under the sound head and two pairs of rollers would be necessary for advancing the card at controlled speed for the entire length of the track.

FIG. 5A shows a modified construction in which two pairs of rollers 82', 90' are spaced from one another lengthwise of a guideway 26'. Endless belts 91 pass around corresponding rollers of both pairs of rollers. The card 28 is gripped between the belts 91 and is advanced by direct contact with the belts.

FIGS. 6 and 10 show another modification of the invention in which a card 92 is attached to a sliding frame 94. In the construction illustrated, an edge portion 96 of the card extends between a top wall 98 and a bottom wall 99 of the sliding frame 94. The card 92 is secured to the frame 94 and held against both lateral and transverse movement with respect of the frame by pins 102 attached to extending portions 104 of the top wall. These extending portions 104 can be resilient so that they flex upwardly as leaf springs to permit entry of the card 92 into the sliding frame 94. When the parts lifting the extensions 104 is released, with the card 92 in proper position, the pins 102 extend into openings 106 (FIG. 11) in the card 92 and the card is held immoveable with respect to the sliding frame 94.

FIGS. 7 and 8 show the way in which the sliding frame 94 fits into a stationary frame 110. This stationary frame 110 has a top wall 112 and a bottom wall 114. These two walls 112 and 114 are joined together by a side wall 116 to form a boxlike structure which is open at the side opposite the wall 116. This opening is indicated by the reference character 118.

The sliding frame 94 telescopes into the stationary frame 110 and the two frames are held in longitudinal alignment with each other by a ridge 122 formed on the top wall 98 of the sliding frame. This ridge 122 engages a groove 124 in the inner surface of the top wall 112. The groove 124 extends all the way to the lower end of the stationary frame 110 so that the sliding frame 94 can be initially inserted into the stationary frame 110. After the frames are assembled, in the relation shown in FIG. 6, a stem 126 of a knob 128 is inserted through a slot 130 in the top wall 122 of the fixed frame 110. The stem 126 connects with the top wall 98 of the sliding frame 94. In the construction illustrated, the stem 126 screws into the top wall 98; but any other connecting means can be used.

The length of the slot 130 is limited so that the sliding frame 94 cannot move down any further than is shown in FIG. 6. This leaves the sliding frame 94 with the ridge 122 indicated in the groove 124 for sufficient distance to maintain the alignment of the frames 94 and 110 when they are in their most extended position.

The sliding frame 94 is moved up and down in the fixed frame 110 by moving the knob 128 manually along the slot 130. This moves the card 92 as a unit with the sliding frame 94; and the card 92 has a multichannel sound track 134 on the part of the card that is used within the fixed frame 110 as the card moves into the fixed frame. The portion of the card 92 beyond the sound track 134 extends through the opening 118 at the left hand side of the fixed frame 110 as shown in FIGS. 7 and 8. This extending portion of the card contains legends which identify the material on the sound tracks.

A sound head 140 is carried by the fixed frame 110 at a location near the lower end of the fixed frame and just beyond the slot 130. This sound head 140 extends through the opening 142 (FIG. 9) in the top wall 112 of the fixed frame 110.

The sound head 140 has tabs 144 at its opposite ends which rest on shoulders 146 recessed back from the sides of the opening 142.

The opening 142 is substantially wider than the sound head 140 and there are three shoulders 146 at the upper side of the opening 142 and 143; similar shoulders 146 at the lower side of the opening. These shoulders are tapered and so are the tabs 144 so that the sound head 140 can be lifted out of contact with the shoulders 144 furthest to the right in FIG. 6 and can be placed back in the opening 142 in contact with the middle shoulders 146. In this way the sound head can be moved into different positions for cooperation with different channels of the sound track 134.

In order to hold the sound head 140 down on the supporting shoulders 146 of the opening 142, there is a leaf spring 150 attached to the top wall of the fixed frame 110 by a screw 152. This spring 150 extends across the opening 142 and it can be swung about the seam 152 as a center to clear the sound head 140 when the sound head is to be moved into an adjusted position.

Other provisions for adjusting the sound head 140 transversely of the sound track can be used and if desired a sound head that contacts with all channels simultaneously can be substituted for the adjustable sound head 140. With a sound head that contacts all channels simultaneously switch means are used to make any selected contact of the sound head effective while the others remain ineffective. This is a well understood construction in sound recording and reproducing and no further description of it is necessary for a complete understanding of this invention.

Another modification of the invention is shown in FIGS. 12 – 16. This modification includes a housing 160 into which is inserted one side of a record card 162. The housing 160 has a top wall 164 in which there is a slot 166. This slot has parallel portions 167 joined together alternately at opposite ends to form a tortuous path which has an upper run 170 that joins the first and last of the parallel runs to make the slot a continuous unending slot.

The card 162 is held in a fixed position in the housing 160 by pins 174 which extend through openings in the card. The card has a sound track of the same shape as the tortuous slot 166 and this sound track, indicated by the reference character 178 is located immediately under the slot 166 as shown in FIGS. 14 and 15. A sound head 180 is located within the housing 160 and over the track 178. The sound head is attached to a support 182 which runs along the top wall of the housing 160 in contact with the surfaces of the top wall on

either side of the slot. The connection between the sound head **180** and a knob **184** connected with the sound head and located above the support **182** includes a guiding element **188** which runs in the slot **166** and which is connected to the sound head **180** so as to prevent the sound head from turning except when the guide element **188** turns in following the outline of the slot **166**.

While the support **182** is running along the parallel portions of the slot **166**, the sound head touches the sound track **178**. As the slot approaches the curves where its direction reverses, the top surface of the wall **164** rises along slopes **191** and **192** as shown in FIG. **16**. The slope **191** is at the upper end of the straight run of the slot which is furthest to the left in FIGS. **12** and **13** and the section **16—16** is taken along this straight run of the slot. The slope **192** in FIG. **16** is the slope for the reverse curve where the second and third straight runs from the left are joined by a 180° curve in the slot. These two straight runs are indicated in FIG. **14** by the reference characters **196** and **197** respectively; and the straight run which is furthest to the left is indicated by the reference character **198**.

The slopes **191** and **192**, and corresponding slopes at other curves n the slot, cause the sound in **180** to be lifted out of contact with the sound track and to an elevation above the top of beams **200** which extend under the slot **166** at various locations where beams are necessary to provide support for sides of the slot which would otherwise be cut off from any support because of the continuity of the slot **166**.

There are slopes **191** and **192** and corresponding elevated portions of the surface of the top wall, as shown in FIG. **15**, wherever the sound head **180** has to pass over one of the beams **200**.

In addition to lifting the sound head **180** out of contact with the sound track at the curves in the slot **166**, the sound head can be disconnected from the audio circuit to which it is connected by flexible cable **202**. The connecting and disconnecting of the sound head **180** from its associated audio circuitry can be effected by a switch indicated generally by the reference character **206** in FIGS. **17** and **18**. The switch **206** has an operating arm **208**. When the operating arm is at a center position, as shown in FIG. **17**, the switch **206** is closed. When the arm **208** swings into an angular position, as shown in FIG. **18**, the switch is open. A switch operator **210** is connected to the end of the arm **208** remote from the guide element **188**; and whenever the guide element **188** passes around a curve, as shown in FIG. **18**, the switch operator **210**, which has a diameter substantially equal to the width of the slot, is shifted into an angular position with respect to the guide element **188** to open the switch.

FIG. **19** shows another modification in which a sound head **216** is attached to an endless belt **218** which reverses its run around guide wheels **220** and **221** supported by axles **224**. The record card has a sound track which follows the path of the endless belt **218** and the endless path moves at a uniform speed as the wheel **220** is driven by the electric motor **226** through reduction gearing **228**.

The construction shown in FIG. **18** can have the endless path follow a more complicated course around reversing wheels to produce a tortuous path such as shown in FIGS. **12** and **13**. Since the path **218** and sound head **216** can be located in a housing without the necessity for any slot in the top of the housing, the top of the housing can be continuous and flat. Switches located along the run of the path **218**, such as the Switches **232** and **234** can be used to shut off the operation of the sound head **216** as it passes around curves if such a shutoff is desired.

FIG. **20** shows a sound head **240** with four contacts **241 – 244** that operate along sub-channels ("quarter tracks") of the sound track channels. The circuits of these contacts **241 – 244** have flexible conductors **246** leading to a switch **248** that is operated by a knob **250**. The switch **248** is a five position switch as indicated by the numerals **1** through **4** and the legend "off" on the knob. With the switch in position **1**, only the contact **241** is effective and no sound from the sub-channels of contacts **242**, **243** and **244** is reproduced.

When the switch **248** is turned to position **2**, only the second quarter channel is effective; and similarly positions **3** and **4** make sub-channels **3** and **4**, respectively, effective and only those sub-channels. In the off position none of the sub-channels is effective. The construction of the switch and its combination with the sound track are well known in the art. This structure of FIG. **20** can be used with any of the embodiments of this invention and when used in place of the sound head **30** of FIG. **2**, there is a choice of four sub-channels available for each of the four main channels of the sound tracks to which the apparatus can be adjusted by shifting the guideway **26**. This gives a total of 16 choices of reproduction from each card.

The preferred embodiments of the invention have been illustrated and described but changes and modifications can be made and some features can be used in different combinations without departing from the invention as defined in the claims.

What is claimed is:

1. Audio apparatus including a card having a sound track thereon extending parallel to a longitudinal edge of the card, a frame having a guide along which said edge of the card travels during relative movement of the card and frame, the frame having a portion by which the apparatus is gripped and held by one hand of an operator during use of the apparatus, the card extending beyond the frame and the guide for gripping and holding by the other hand of the operator, a sound head, carried by the frame, located over the sound track, a pair of opposed rollers carried by the frame located along the guideway in position to grip and advance the card at a predetermined speed after the card has been moved into the grip of the rollers by hand manipulation of the card and frame, and characterized by the rollers being located at a different distance frm said longitudinal edge of the card than are the track and sound head, said rollers being at a location lengthwise of the guideway substantially the same as that of the sound head so that as the card is advanced along the guideway by hand manipulation, the rollers grip and continue the advance of the card from substantially the time that the card reaches the location at which the sound head operates on the track and at which speed of the card movement becomes significant in the operation of the apparatus, and said pair of rollers continuing the advance of the card until the trailing end of the card is substantially at the sound head.

2. Audio apparatus having a card with a substantially straight longitudinal edge along one side thereof, a

sound track on the card extending parallel to said edge, a frame having a portion that is shaped to fit the grip of one hand of an operator holding it during use, a channel shaped guideway at one end of the frame facing away from the portion that is gripped in one hand, said channel shaped guideway having top and bottom guide surfaces having portions that extend to the end of the frame remote from the grip portion and that cover the portion of the card inward from said longitudinal edge, including the sound track, and with a mid-surface of the guideway between the top and bottom guide surfaces thereof in angular relation to the top and bottom guide surfaces and with which said longitudinal edge of the card contacts to guide the card during relative movement of the card and frame lengthwise of the sound track, the guideway being substantially shorter than the card in the direction of relative movement of the card and guideway, a sound head carried by the frame with a portion that projects through the top guide surface of the guideway into working relation with the sound track when the edge of the card is against the mid-surface of the channel, the card being substantially greater in width than the part that extends into the guideway whereby most of the card is visible beyond the guideway and there is a wide card area beyond the end of the guideway that can be gripped by the other hand of an operator who is holding the grip portion with his first hand.

3. The audio apparatus described in claim **2** characterized by there being two pairs of rollers spaced from one another lengthwise of the guideway, endless belts passing around corresponding rollers of both pairs, the card being gripped between said belts and advanced by direct contact with the belts.

4. The audio apparatus described in claim **2** characterized by a motor and rollers carried by the frame, said rollers being in position to grip the card and to move it through the channel at a controlled speed after the card has been advanced into the channel by hand manipulation, the rollers being driven by said motor.

5. The audio apparatus described in claim **4** characterized by the rollers having their axis canted with respect to the direction of travel of the card along the channel, the canting being in a direction that hold the edge of the card in contact with the center surface of the channel.

6. Audio apparatus as described in claim **2**, the frame having a guideway extension through which the card passes during said relative movement, guide surfaces at opposite sides of the guideway extension for guiding contact with the longitudinal edges of the card, the guide surfaces of the guideway extension being spaced from one another by the width of the record and of sufficient longitudinal length to maintain the card with the sound track under the head.

7. The audio apparatus described in claim **6** characterized by the guideway extension having a shallow depression therein under the sound track into which the sound head distorts the card to maintain a pressure between the sound head and the card by virtue of the elasticity of the card.

8. The audio apparatus described in claim **6** characterized by, said guideway extension extending across the bottom surface of the card and then up above both edges of the card, and the guideway extension being open at the top of the card whereby the top surface of the card is visible as it passes through the guideway extension.

9. The audio apparatus described in claim **8** characterized by the guideway extension having top portions that extend for a short distance over the top of the card but leaving most of the width of the card uncovered, each of said top portions, with the adjacent side and part of the guideway extension bottom, constituting a channel into which a longitudinal edge of the card extends.

10. The audio apparatus described in claim **9** characterized by the card having a multi-channel sound track with the channels parallel to one another and along the same edge portion of the card, and means for adjusting the relative positions of the guideway extension and card transversely of the sound track to bring the sound head selectively into operative relation with different channels of said track.

11. The audio apparatus described in claim **10** characterized by the guideway extension being movable with respect to the frame to shift the card transversely of the sound head, and means for holding the guideway extension in different positions to which it is shifted.

* * * * *

UNITED STATES PATENT OFFICE

CERTIFICATE OF CORRECTION

Patent No. 3,767,208 Dated October 23, 1973

Inventor(s) Murice E. Chernowitz

It is certified that error appears in the above-identified patent and that said Letters Patent are hereby corrected as shown below:

In the Abstract, line 3, "extends" should read -- extending --; cancel the last sentence "Extra Length ... apparatus.". Cancel the originally printed columns 1 through 10 and subtitute the corrected columns 1 through 6.

Signed and sealed this 27th day of August 1974.

(SEAL)
Attest:

McCOY M. GIBSON, JR.
Attesting Officer

C. MARSHALL DANN
Commissioner of Patents

FORM PO-1050 (10-69)

USCOMM-DC 60376-P69
* U.S. GOVERNMENT PRINTING OFFICE : 1969 O—366-334.