United States Patent [19]

Zimmer

[11] **3,763,030**

[45] **Oct. 2, 1973**

[54] **APPARATUS FOR THE PRODUCTION OF SEAMLESS HOLLOW CYLINDERS**

[76] Inventor: **Peter Zimmer,** Engelhardstrasse 7, Kufstein, Austria

[22] Filed: **Aug. 2, 1971**

[21] Appl. No.: **168,062**

Related U.S. Application Data

[63] Continuation-in-part of Ser. No. 697,464, Jan. 12, 1968, abandoned.

[52] **U.S. Cl.** **204/281,** 204/9, 204/11

[51] **Int. Cl.** **C23b 7/00,** C23b 7/02, B01k 1/00

[58] **Field of Search** 204/11, 9, 281

[56] **References Cited**

UNITED STATES PATENTS

2,287,122	6/1942	Norris	204/11

FOREIGN PATENTS OR APPLICATIONS

975,147	11/1964	Great Britain	204/11
8,108	1892	Great Britain	204/9

Primary Examiner—T. Tung
Assistant Examiner—T. Tufariello
Attorney—E. F. Wenderoth et al.

[57] **ABSTRACT**

The invention relates to a matrix device for making seamless hollow cylinders for use as cylindrical screen printing stencils. A cylindrical metal film is electrolytically formed in either unperforated or a perforated form upon an expandable and contractible hollow, cylindrical rotary matrix. The metal film is subsequently removed from the matrix. The cylindrical hollow matrix consists of a cylindrical jacket disposed between endpieces and is provided inside, at least in the jacket zone, with a gas or liquid tight hollow space, accessible by at least one valve. The jacket of the matrix in one form consists of a cylindrical inner jacket sheet of rubber elastic material and of a separate cylindrical outer jacket of electrically conductive metal material. Both the inner jacket and the outer jacket are concentrically connected to or between the axially opposed endpieces with the outer jacket and the inner jacket only in loose contact intermediate the ends thereof. A valve is provided usually in an end piece through which pressurized fluid is admitted or allowed to escape, as required. In another form, only an outer metallic foil like jacket is sealingly attached in a fluid-tight manner to the endpieces and is of such character to be slightly expandable while maintaining a smooth outer surface on which the electrolytically deposited cylinder is formed in an endless cylindrical manner, and is subsequently capable of being deflated sufficiently to permit easy removal of the electro-deposition. Suitable screen patterns can be formed simultaneously by applying insulated sleeves having predetermined screen aperture patterns to the metallic foil matrix jacket. The expandability characteristic enables the formation of relatively thicker perforated rotary printing screens than have been available by previously known process and apparatus.

6 Claims, 9 Drawing Figures

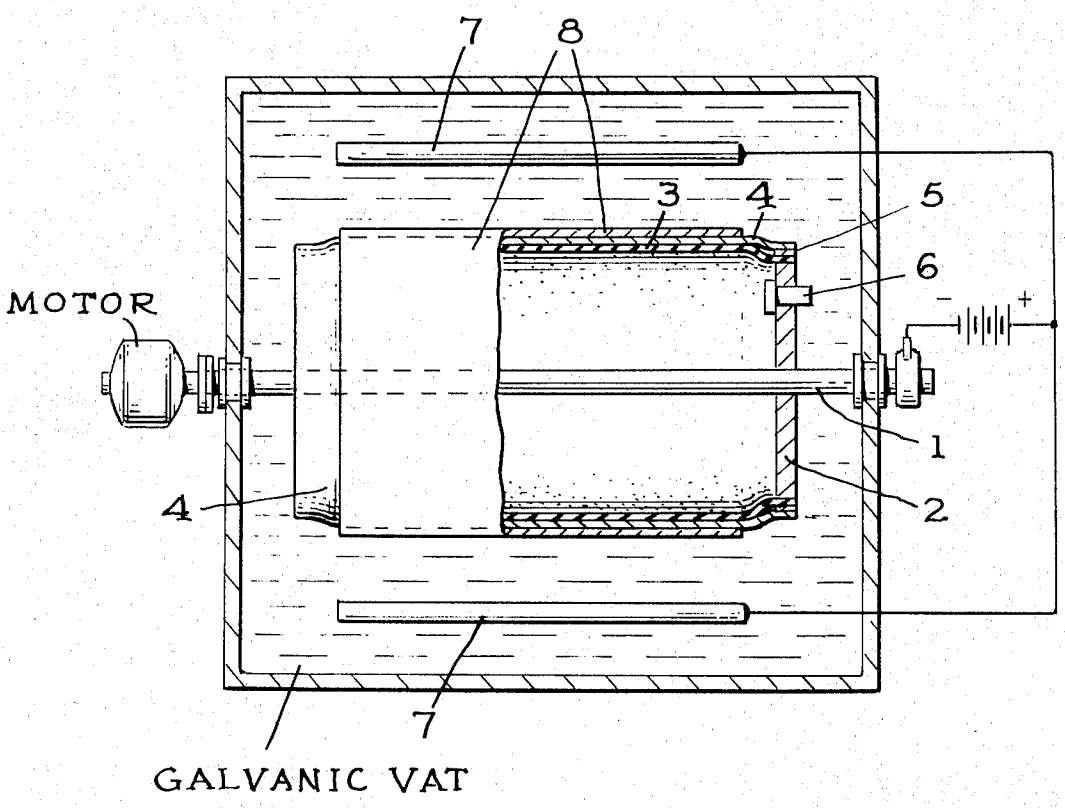

FIG. 1.

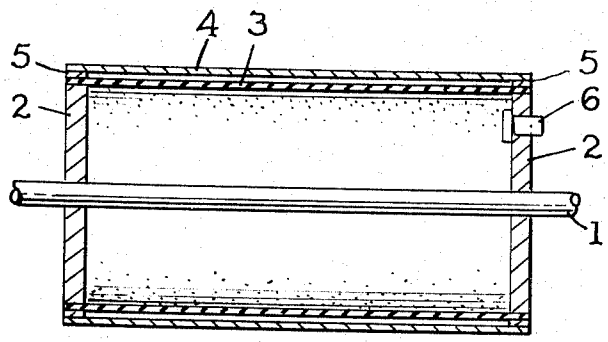

FIG. 2.

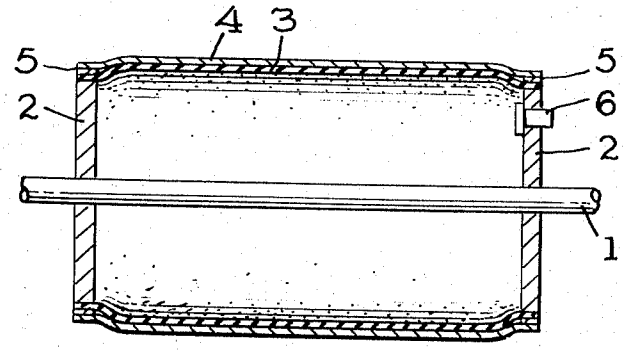

FIG. 3.

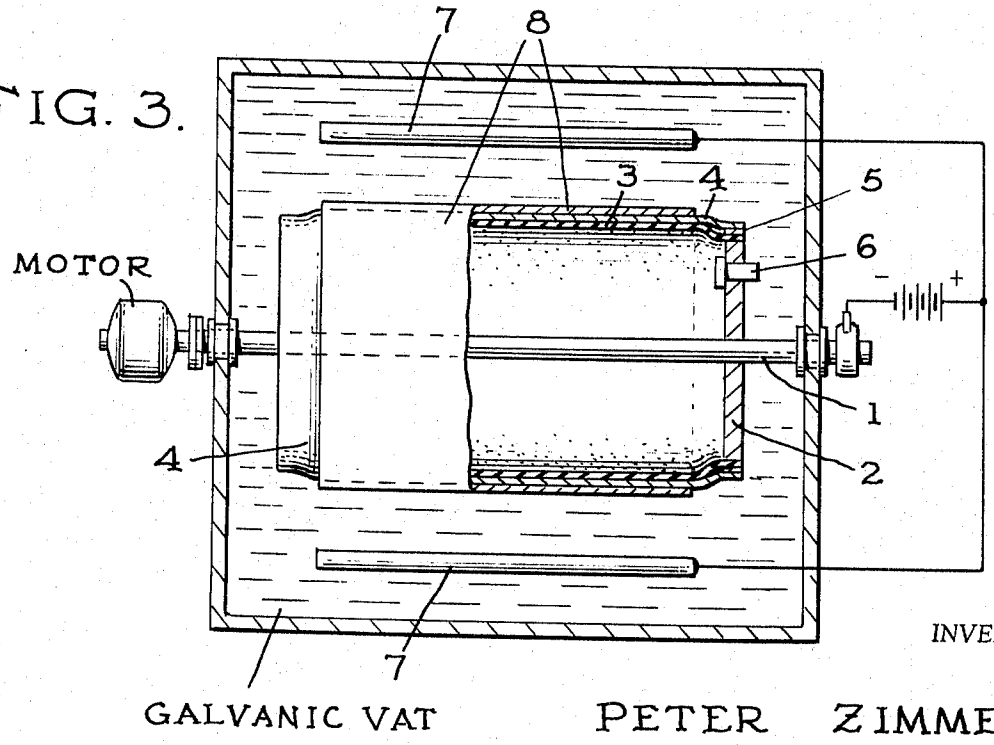

INVENTOR

PETER ZIMMER

BY

Wenderoth, Lind & Ponack

ATTORNEYS

FIG. 4.

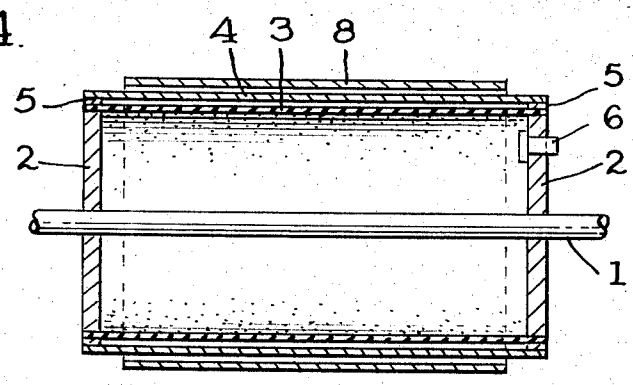

FIG. 5.

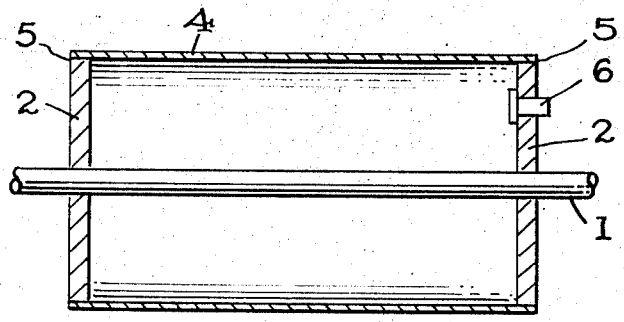

FIG. 6.

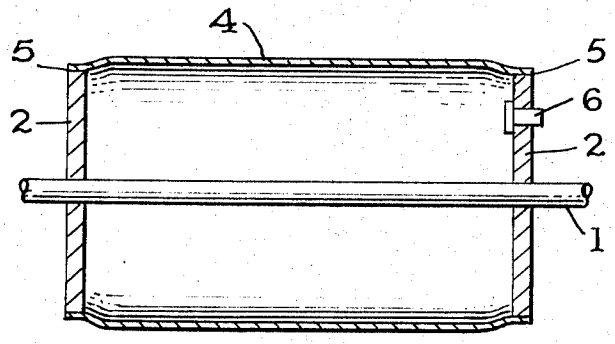

INVENTOR
PETER ZIMMER
BY
Wenderoth, Lind & Ponack
ATTORNEYS

FIG. 7.

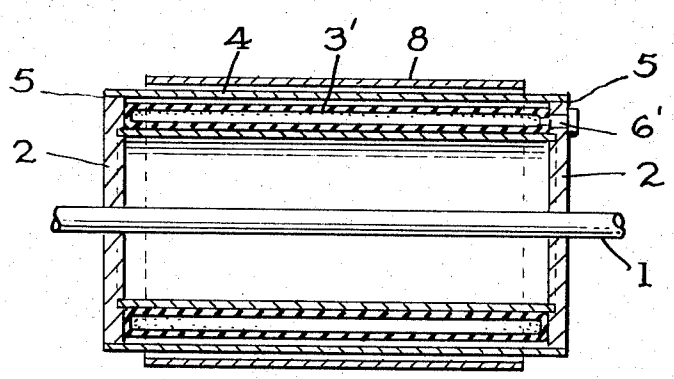

FIG. 8.

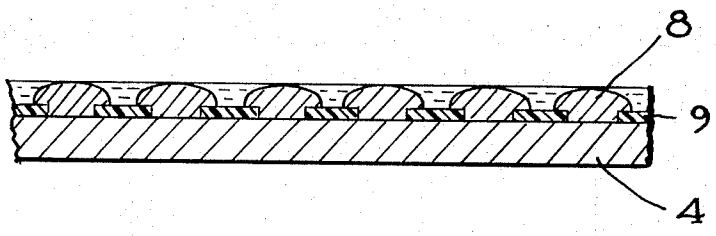

FIG. 9.

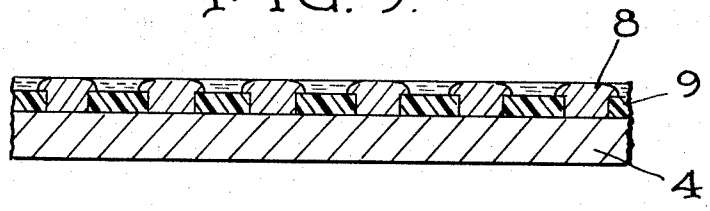

INVENTOR

PETER ZIMMER

BY Wenderoth, Lind & Ponack
ATTORNEYS

APPARATUS FOR THE PRODUCTION OF SEAMLESS HOLLOW CYLINDERS

This application is a continuation-in-part of my copending application Ser. No. 697,464, filed Jan. 12, 1969, now abandoned.

THis invention relates to a device for the production of jointless hollow thin metallic cylinders of both the non-perforated and perforated type, some of which are useable for cylindrical screen printing stencils wherein a cylindrical and sometimes perforated metal film is electrolytically formed upon a hollow cylindrical matrix, and whereby said metallic film is subsequently readily removed from the matrix.

The production of jointless cylindrical metal bodies by means of an electrolytic process is known, as is the removal of the electrodeposition from the electrode core or from the matrix, according to known methods, in such a way that the periphery of the deposited metal shell is stretched by the action of pressure rollers. Furthermore, the use of an electrode core or a matrix of an easily fusable material which it is melted out after the galvanization is known. Furthermore, it has been proposed to chemically separate the matrix material from the electro-deposition. Another known process consists in that a cylindrical metallic film is electrolytically formed on a cylindrical metal matrix whose material has a coefficient of thermal expansion different from that of the matrix material, whereafter the hollow cylindrical metal film is removed from the matrix by subjecting them to a change of temperature.

In all of these known methods, the removal of the electro-deposition is not achieved in a fully satisfactory way because the matrix is often destroyed or because a sufficient difference between the external diameter of the matrix and the internal diameter of the electro-deposition cannot be practically attained, or such involves impractical difficulties.

This foregoing disadvantage is eliminated according to the present invention in that an improved matrix is formed of a cylindrical hollow body which can be at least partially filled with a fluid pressure medium, and whose jacket consists of an elastic, electrically conductive material, said jacket being expanded by an increased internal pressure applied within the cylindrical hollow body while the thin metal film is electrolytically deposited thereon, and whereafter the electrolytically deposited metal film is drawn off as a jointless hollow cylinder after the increased internal pressure has been reduced and the elastic jacket has substantially returned to its initial form.

As mentioned above, many of the hollow cylinders produced by the improved apparatus of and according to the process of this invention are preferably used as cylindrical screen printing stencils and must be provided with perforations for this purpose. After the electrolytic production of such a hollow cylinder having a solid uninterrupted wall, perforations can be made by an etching operation. However, it is also possible to simultaneously electrolytically deposit a hollow cylinder and form the desired perforations on the matrix. In this latter case an insulating layer with a predetermined pattern for forming open spaces is applied on the matrix, whereby no electro-deposition is formed on the insulated areas so that the electrolytically produced hollow cylinder is provided with perforations in these areas. The pattern or perforations and thus the insulating

cover useable on the matrix can be of any of a variety of different predetermined patterns. A main advantage of the process attendant using the improved apparatus resides in the galvano-plastic production of such perforated hollow cylinders which permits the application of a relatively thick insulating layer of a desired point pattern. This implies that the electro-deposition only fills the spaces between the insulating points or areas, without being deposited on the surface of the insulated areas at their circumference, or deposited thereon only to a very minor extent.

Heretofore it has only been possible to apply insulating layers or insulating points having a relatively small thickness to the conductive surface of the matrix because it was impossible to withdraw the electrolytically deposited hollow cylinder from such a matrix having relatively thickly insulated elevations on the matrix. By use of the improved matrix apparatus and attendant process according to this invention, insulating layers or insulating points having a relatively and significantly greater thickness are now possible because the outer diameter of the matrix can be considerably decreased by the reduction of its internal pressure. This enables a hollow cylinder, such as a screen printing stencil, to be produced, which much more precisely corresponds to the insulated pattern on the surface of the matrix with regard to the perforations. Furthermore, such an improved formed printing stencil also permits the formation of color runs and halftones.

Where multicolor printing is being done, it is important to be able to produce a plurality of screen cylinders having accurately uniform outer diameters, as by the use of the matrix device of this invention, whereby one master matrix can be used for the production of the needed plurality. The master matrix device hereof serves as the cathode during the electroplating process as it is rotated between the anodes in the galvanic vat.

One form of appropriate apparatus for effecting the process hereof essentially consists in that the cylindrical matrix is provided internally, at least in the peripheral jacket zone, with a gas or liquid-tight hollow space, accessible by at least one valve, preferably in an end disc, and in that at least an external jacket is made of a semi-resilient or partially expandible electrically conductive material. It is also convenient but not absolutely necessary to provide an internal jacked formed of rubber or other elastic-like material concentrically adjacent to said electrically conductive, external jacket. The internal jacket is such as to seal or form a gas- or liquid-tight internal hollow space. The internal jacket is preferably joined to the opposite end walls of the matrix in a suitable gas- or liquid-tight way.

Where an internal jacket is not used, it is possible to essentially achieve the same effect to a large degree by attaching a longitudinally seamless external jacket at its ends in a fluid-tight manner to the opposite disc shaped end plates of the matrix device.

The present novel use of an expandable external jacket formed of a thin metallic foil such as nickel foil and having a smooth outer peripheral surface assures the ability to electrolytically form thereon a metallic cylinder or perforated cylindrical printing screen having a more uniform thickness and smoothness throughout as well as more distinctive and uniformly formed perforations in the case of rotary printing screen stencils. Cylindrical screens of greater thickness are also available, due to the improved apparatus and the use

thereof. This is a marked improvement over the known prior art devices which have been known to use much less effective expandable mandrels or matrixes utilizing rubber or rubber-like outer jacket means which are more susceptible to irregular wear and non-uniform expansion. The use of a rubber jacket, whether coated or not, is adversely subject to irregular tensions and where thinner, less uniformly formed areas of the rubber wall occur, the rubber jacket is susceptible to higher tensions and bulging, thereby detracting from the ability to produce precisely and uniformly formed electrolytically deposited cylinders thereon.

Also when a rubber-like jacket is covered with an electrically conductive coating, such coating tends to become brittle and fractured by being subjected to continuous expansion and release, thereby not having the ability to produce the desired degree of uniform and smooth electro-deposited cylinders thereon.

In applicant's proposed apparatus, the use of thin nickel foil plating in a seamless manner as the expandible outer jacket enables it to be inflated and deflated to the necessary extent to permit removal of the electrolytically formed cylinder without the need for the application of chemicals often otherwise used in the prior art and which nickel material cannot withstand.

Furthermore, weight and expense considerations are important factors to be considered, and the control of the outer circumference or peripheral surface of a rotary printing screen is very important to the various printing arts. The previously known solid heavy cylinders often made of nickel or other material were very expensive and very heavy. For example, a cylinder of a given size made of the more solid heavy nickel could weigh between 500 to 1,000 pounds, as compared to approximately 10 pounds or so for the light-weight metallic foil matrix of the present invention embodying the light-weight nickel foil-like outer jacket. It is apparent that the relative costs would also be diminished for the light-weight apparatus, being only approximately one-tenth the cost of the heavier device, for example $200.00 compared to about $2,000.00. Also, in the use of the heavy solid type device, much grinding and polishing is required to obtain an accurate surface, and such rigid devices more subject to defacement by scratching, etc., during stripping or other handling thereof. In comparison to applicant's improved light-weight matrix, due to the relative resiliency of the outer (and inner) jacket, it was not as easily defaced or scratched, and lends itself to the required degree of flexibility to expand and contract or be deflatably compressed to enable easy removal of the electro-deposited cylinders therefrom. Applicant's device assures a more efficient working screen cylinder formed thereon, such as a ductile nickel screen, having the ability to produce sharper and more distinctive copy therefrom and without having any longitudinal seam.

It is also to be noted that the problem of removing an electro-deposited cylinder after its formation is totally different and unrelated to those devices which serve merely as a support to receive thereon previously formed cylinders which are to be subjected to subsequent fabrication treatment. The light-weight matrix formed according to this invention is not intended to withstand the strain of attempted removal of electro-deposited cylinders by the usual means apart from deflating methods. Also, the heavy-weight type and light-weight types are much different with respect to the degree of relative firmness and their respective ability to withstand buoyant forces in a galvanic vat or chamber, and care must be taken not to apply to subject the light-weight foil-type matrix to such excessive forces, whether attendant the phase of inflating or expanding the matrix jacket or whether subjecting the matrix to the buoyant forces, which forces may cause it to rupture with attendant danger to the operational work crew. In this regard, heretofore it was not thought possible to be able to evolve a light-weight matrix of this character for such successful use in galvanic deposition forming of thin cylinders for use as printing screens and the like. As an example, in the fabrication of large carpet printing screens having approximately a 300 mm diameter, a 1,000 mm circumference and a length of about 5–6 m, the fluid expandable matrix jacket is a metal sheet or foil of only a few 10th mm wall thickness which is stretched between the end mounting plates. In operation the fluid or air-filled matrix is fixedly mounted for axial rotation at its end plates while submerged or at least partially submerged in the galvanic vat, the buoyant forces in such a situation exert a pressure of about 500 kg on the thin jacket imparting shear forces with respect to the longitudinal axis tending to bend or otherwise break or deform it. For safety reasons, an internal expandable pressure of the matrix jacket is limited to less than 1 kg per sq. centimeter. Of course, the dimensions of the matrix may vary for different uses, and may be proportionately smaller including, for example, a size of about 200 mm diameter with a length of from 2.5 to 3 m.

Embodiments of the invention are hereinafter described with reference to the accompanying drawings without being limited thereto.

FIGS. **1–4** are schematic views of a device according to the present invention showing different states of its use;

FIGS. **5** and **6** correspond to FIGS. **1** and **2**, but depict a modified embodiment;

FIG. **7** is a further modification; and

FIGS. **8** and **9** are fragmentary enlarged cross-sections of the electro-deposition.

Referring to FIGS. **1–4**, the matrix consists of a carrier shaft **1** on which opposite end disks **2** are attached to rotate with the latter. Spanning the two end disks **2** is a rubber jacket **3** and an electrically conductive jacket **4** of a metallic-like foil, such as nickel foil, is spanned over the latter. The thickness of the metallic jacket may vary for different applications and range from 0.13 to 0.3 mm, and in some special cases, to 0.6 mm. The inside of the matrix is an outwardly sealed fluid-tight hollow space, accessible by at least one valve **6** to facilitate inflation and deflation thereof.

The inside hollow space which receives the gas or liquid pressure medium need not extend over the whole inside space of the matrix. For example, as distinct from the FIGS. **1–4**, a circular or ring-line in cross-section gas or liquid-tight hollow space lying in the jacket zone which receives the pressure medium for the expansion of the external jacket of the matrix would be sufficient.

FIG. **1** illustrates a state in which the internal pressure in the hollow space is equal to the external pressure. Upon pneumatic or hydraulic increase of the internal pressure, the rubber jacket **3** and thus the conductive jacket **4** is extended, as illustrated in FIG. **2**. As can be seen from FIG. **3**, an electro-deposition in the

form of a seamless cylindrical metal film **8** is deposited, while within a galvanic vat, with the matrix rotating relative to the anodes **7**. Upon completion of the deposited film **8**, the internal pressure in the inside hollow space of the matrix is again reduced. Thus, the elastic, electrically conductive jacket is deflatable and at least partially substantially returns to its initial diameter. The electrolytically deposited cylindrical metal film **8**, however, is not elastically stressed and maintains its diameter as formed. Thus the cylindrical metal film **8** is loosened and can easily be drawn off from the matrix (FIG. **4**). The thickness of the deposited metallic foil-like cylinders may vary within an approximate range of from 0.04 to 0.25 mm, and after formed have a rigidity resembling fine razor blades.

FIGS. **5** and **6** are similar to FIGS. **1** and **2**, respectively, and depict the form of the matrix which omits the inner rubber jacket **3**. In this embodiment, where there is no inner jacket used to help provide back-up support, it may be desirable to utilize a somewhat heavier gauge metallic outer jacket while still retaining the semi-resilient or expandable characteristic thereof.

FIG. **7** is a view similar to FIG. **4**, but depicting a modified form of the inner jacket **3'** which is of annular tubular form, and valve **6'** is operatively connected thereto through the end disc **2**.

FIGS. **8** and **9** illustrate the particular advantage of the present invention in the galvano-plastic production of perforated hollow cylinders. In order to electrolytically produce a perforated hollow cylinder, an insulating cover **9** having preferably point-shaped openings must be applied around the electrically conductive jacket **4** of the matrix. Said cover means may consist, e.g., of photosensitive lacquer and be advantageously produced by means of the photostatic method. As generally known, during this process the conductive jacket **4** of the matrix is provided with a layer of photosensitive lacquer which has not yet been exposed and whose diameter is uniform. After drying of this layer, a suitable film is applied onto said photosensitive lacquer, said film then being exposed and developed. After development the body of the cover means **9** remain while the spaces defined by the cover means show the bright metallic exposed surface of the conductive jacket **4** of the matrix. If these insulating cover means **9** are considerably smaller in wall thickness than the wall thickness of the perforated hollow cylinders **8** to be produced, then the electro-deposition forming the perforated hollow cylinders **8** tends to overlay in such a manner that the spaces in the cover means **9** become more filled until the thickness of the electro-deposition reaches the thickness of the insulation cover means **9**. Upon continuing deposition of the preferably nickel material, this deposition outwardly builds and overlays the insulation cover means **9** and the perforations formed during the electro-deposition of the hollow cylinders **8** becomes smaller the more the wall thickness of the cylinders **8** increases.

In some known processes in which a cover means **9** having a thickness of only approximately 0.01 mm could be used, and where the electrolytically deposited hollow cylinders **8** built-up a wall thickness of approximately 0.08 mm, the extent of the decrease of the perforation size is especially high. According to the present of the invention, considerably thicker insulating cover means **9** are possible, up to the thickness of the electro-deposit of the hollow cylinder **8**, and perhaps even more.

As can be seen from FIG. **9**, the electro-deposit does not, or does only to a very small extent, overlay on the insulating cover means **9**, if the thickness of these cover means is not substantially kept below the thickness of the electro-deposit, so that the perforations of the formed hollow cylinder **8** practically equal those in size of the cover **9**. The larger the diameter of the insulating covers **9** in comparison to the diameter of the galvanic metal film of the hollow cylinder **8** to be produced, the more accurately the perforations correspond to the matrix pattern.

While the ratio of the mentioned thicknesses (photosensitive lacquer:electro-deposit) previously has been 1 : 10 to 1 : 8 at the most, the ratio of the thickness (insulating cover or photosensitive lacquer:galvanic metal film) can now be 1 : 4, preferably more than 1 : 2, up to 1 : 1, by this invention.

What is claimed is:

1. A hollow cylindrical matrix device for use in the electrolytic production thereon of relatively light weight, thin, metallic seamless, hollow cylinders to be used in the making of screen printing stencils and which are individually formed and removed from the matrix device after formation, said matrix device comprising, in combination;

a. a pair of axially opposed, spaced apart end pieces;

b. a cylindrical jacket means interposed and operatively connected with said end pieces, said jacket means and said end pieces forming a fluid-tight chamber,

c. said jacket means comprising an electrically conductive metallic sheet having the characteristic of being expansible outwardly in response to pressure internally of said chamber;

d. said metallic sheet having an inner cylindrical pressure receiving surface and an outer cylindrical deposit receiving surface;

e. means operatively connected with said chamber for inserting pressurized fluid therein to act on said pressure receiving surface and to expand said metallic sheet;

f. electric insulating means applied to said deposit receiving surface and providing a predetermined screen-forming pattern for effecting formation of predetermined screen perforations simultaneously with the electrolytical formation of said seamless cylinder.

2. A matrix device as defined in claim **1**, wherein said axially opposed end pieces are of circular form and said metallic sheet is adjoined in a fluid pressure tight manner to said end pieces near their outer peripheries.

3. A matrix device as defined in claim **1**, wherein said insulating means includes means to define point-shape openings in the formed screen stencil, and the ratio between the thickness of said insulation means and the thickness of an electro-deposition of the screen being within the range of from 1:1 up to at least 1:4.

4. A hollow cylindrical matrix device for use in the electrolytic production thereon of relatively light weight, thin, metallic seamless, hollow cylinders to be used in the making of screen printing stencils and which are individually formed and removed from the matrix device after formation, said matrix device comprising, in combination:

a. a pair of axially opposed, spaced apart end pieces

b. a cylindrical jacket means interposed and operatively connected with said end pieces, said jacket means and said end pieces forming a fluid-tight chamber,

c. said jacket means comprising

1. an electrically conductive metallic sheet having the characteristic of being expansible outwardly in response to pressure internally of said chamber;

2. an inflatable/deflatable inner jacket having at least one member of elastic rubber-like material extending between said end pieces and concentrically underlying and adapted to operatively expansively engage with said metallic sheet in response to a predetermined increase of the internal fluid pressure,

d. said metallic sheet having an inner cylindrical pressure receiving surface and an outer cylindrical deposit receiving surface and said elastic member having an outer cylindrical pressure applying surface engageable with said pressure receiving surface;

e. means operatively connected with said chamber for inserting pressurized fluid therein to cause said pressure applying surface to act on said pressure receiving surface and to expand said metallic sheet;

f. electric insulating means applied to said deposit receiving surface and providing a predetermined screen-forming pattern for effecting formation of predetermined screen perforations simultaneously with the electrolytical formation of said seamless cylinder.

5. A matrix device as defined in claim **4**, wherein said insulating means includes means to define point-shape openings in the formed screen stencil, and the ratio between the thickness of said insulation means and the thickness of an electro-deposition of the screen being within the range of from 1:1 up to at least 1:4.

6. A matrix device as claimed in claim **4**, wherein said inflatable/deflatable inner jacket comprises an annular tubular member concentrically underlying said metallic sheet, and said means to insert pressurized fluid is connected to the interior of said tubular member.

* * * * *