United States Patent [19]

Cooper et al.

[11] **3,762,578**

[45] **Oct. 2, 1973**

[54] **DRILL ROD HANDLING APPARATUS FOR RAISE DRILLS**

[75] Inventors: **Robert T. Cooper**, Dallas; **Harrison O. Soule**, Orange, both of Tex.

[73] Assignee: **Dresser Industries, Inc.**, Dallas, Tex.

[22] Filed: **Jan. 17, 1972**

[21] Appl. No.: **218,446**

[52] **U.S. Cl.** ..... **214/1 P**, 175/85, 294/104, 214/1 BC

[51] **Int. Cl.** **E21b 19/14**

[58] **Field of Search** ..... 214/2.5, 1 P, 1 BC; 294/104, 88; 175/52, 85; 166/315

[56] **References Cited**

UNITED STATES PATENTS

3,506,075	4/1970	Attebo	214/2.5 X
3,097,011	7/1963	Foster	294/104
3,464,507	9/1969	Alexander et al.	214/2.5 X

Primary Examiner—Gerald M. Forlenza
Assistant Examiner—Frank E. Werner
Attorney—Robert W. Mayer et al.

[57] **ABSTRACT**

The addition or removal of individual drill rods from the drill column of a raise drilling system is facilitated by a drill rod handling apparatus. The drill rod handling apparatus is attached to the support frame of the raise drill and includes arm means for moving individual drill rods into and out of the uppermost position in the drill column. Gripping elements are connected to the arm means for grasping and retaining an individual drill rod as it is being moved into and out of the drill column. The gripping elements include mechanical locking means for locking the gripping elements when the gripping elements are grasping and retaining an individual drill rod. A shock absorber means is connected to the arm means for absorbing the shock produced by vertical movement of an individual drill rod when the drill rod is contacted and engaged by the drill head of the raise drill.

3 Claims, 4 Drawing Figures

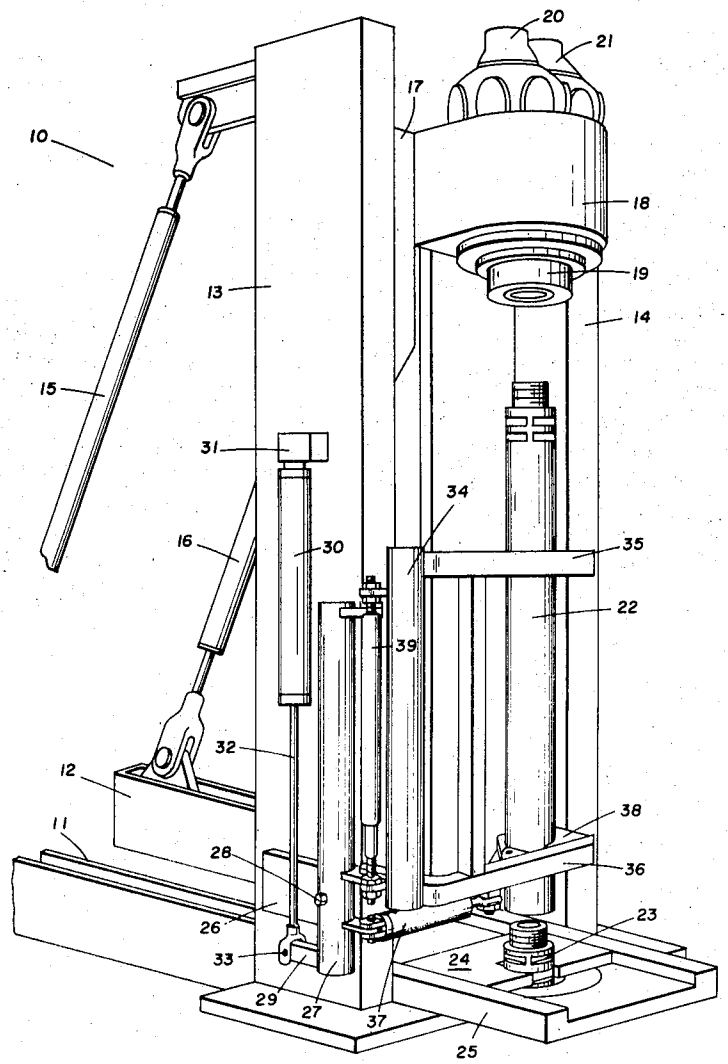

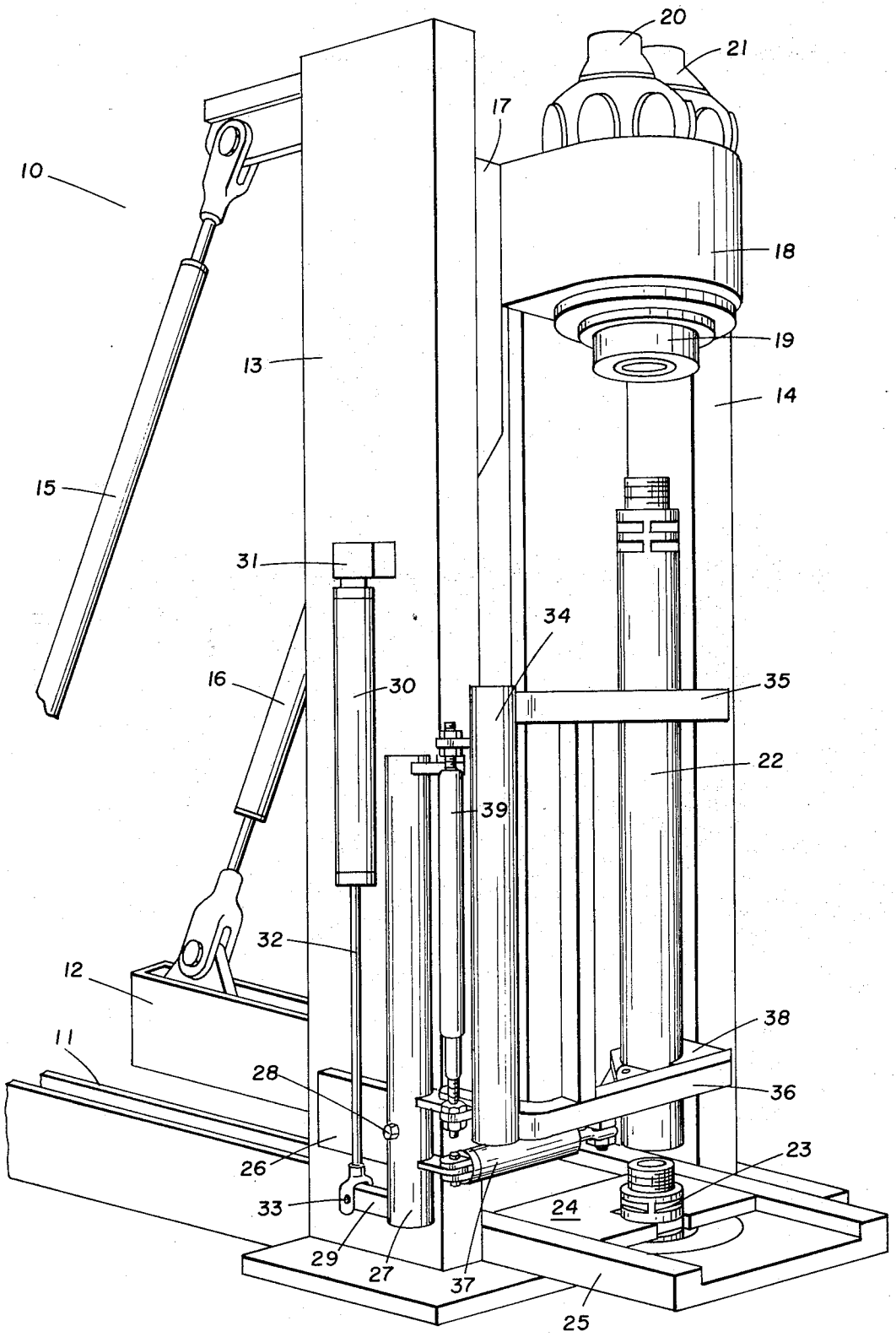
20
21
17
10
18
19
13
14
15
31
34
16
30
35
22
39
32
12
38
11
28
36
26
23
33
24
29
27
37
25

FIG. 1

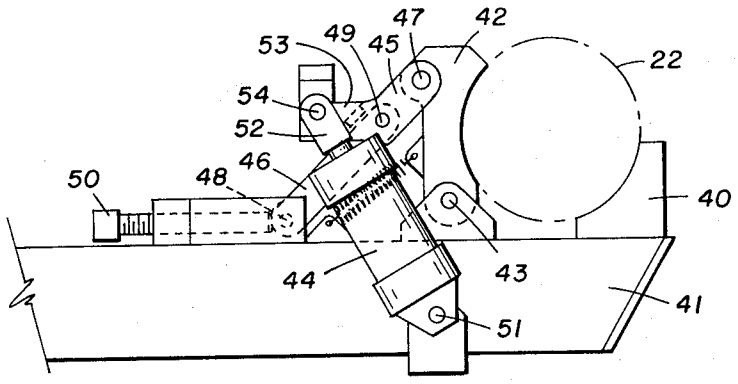

FIG. 2

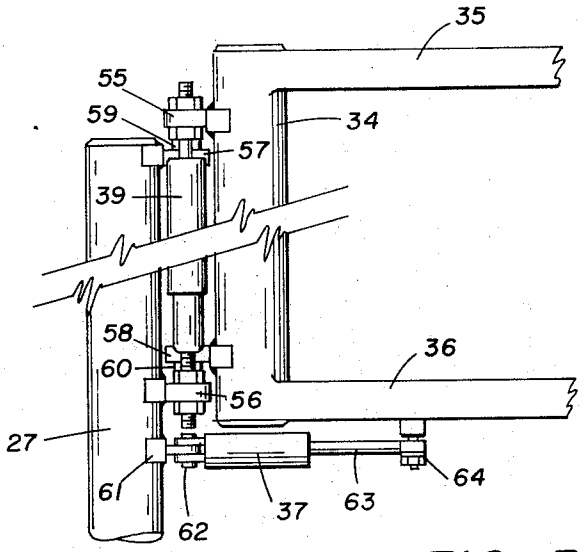

FIG. 3

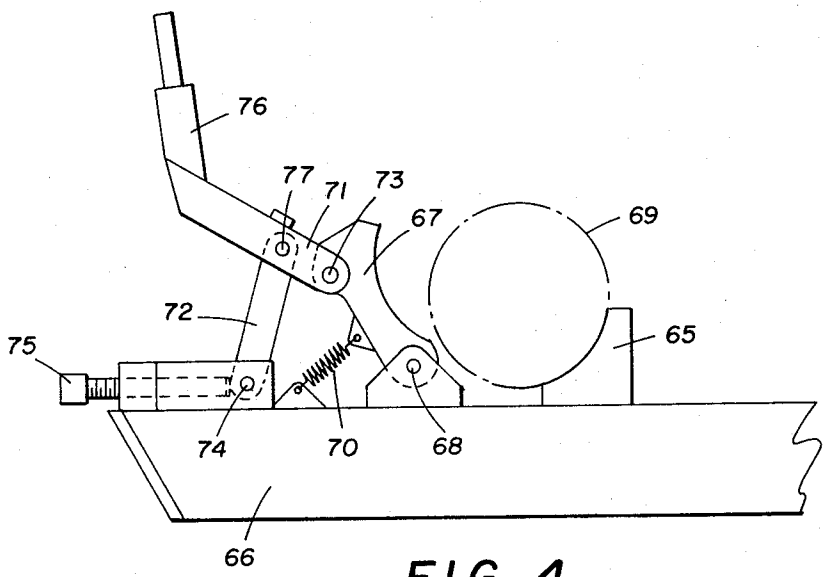

FIG. 4

DRILL ROD HANDLING APPARATUS FOR RAISE DRILLS

BACKGROUND OF THE INVENTION

The present invention relates to the art of earth boring and more particularly to an improved drill rod handling apparatus for moving an individual drill rod into and out of the drill column of an earth boring system.

During an earth boring operation, it is necessary to add individual drill rods to the drill column of the earth boring system as the length of the column is increased and to remove individual drill rods from the drill column as the drill column is shortened. Each individual drill rod must be lifted from a position near the earth boring machine, positioned in line with the drill column, connected to the drivehead of the earth boring machine and connected to the first drill rod of the drill column. It is to be understood that the earth boring operation may be conducted either downward or upward and that the earth boring operation may be conducted at an inclined angle.

Various systems have been provided for handling drill rods during an earth boring operation. In general, the mechanized systems include arm means for moving a drill rod into and out of position in the earth boring machine with gripping means connected to the arm means for gripping an individual drill rod. The gripping means are generally actuated by an external power source. This has on occasion resulted in drill rods being dropped upon failure of the external power source. The drill rods are quite heavy and a serious hazard to personnel and damage to equipment can result.

When a drill rod has been placed in line with the drill column, it must be engaged by the drill head of the earth boring machine and the drill rod must be connected to the first drill rod of the drill column. The drill head of the earth boring machine is moved into contact with the drill rod and the drill head is rotated to engage the drill rod. Drill rod handling systems of the prior art have encountered problems because of the forces generated when the drill head of the earth boring machine contacts and engages the individual drill rod being held by the gripping means. The forces may cause the gripping means to fail resulting in dropping of the drill rod or the forces may result in bending and damage to the structural elements of the drill rod handling system.

DESCRIPTION OF THE PRIOR ART

An apparatus for handling pipe is shown in U.S. Pat. No. 3,446,284 to N. D. Dyer et al., patented May 27, 1969. The apparatus includes a frame that is connected with an earth boring machine by a pivot and a double-acting hydraulic cylinder that is also pivotally connected with the earth boring machine. The cylinder includes a piston that is pivotally connected with the frame of the earth boring machine so that relatively telecoping movement between the piston and the cylinder pivots the frame about the pivotal connection with the earth boring machine. A pair of spaced sets of pipe gripping members are carried by the frame.

In U.S. Pat. No. 3,460,638 to S. C. Millsapps, Jr., patented Aug. 12, 1969, a raise drilling system is shown that includes a pipe handling apparatus. The pipe handling apparatus includes a pipe load arm connected to the raise drill at its lower end for pivotal movement. Means are provided for moving the pipe load arm and the means include a hydraulic cylinder having a piston rod connected to the lower side of the pipe load arm and the cylinder body connected to the base of the raise drill. Two pair of gripper fingers are pivotally connected to the pipe load arm and are operated by means of air cylinders.

SUMMARY OF THE INVENTION

The present invention provides an improved apparatus for handling drill rods in an earth boring system. Arm means move the individual drill rods into and out of the first position in the drill column of the earth boring system. Gripping means are connected to the arm means for grasping and retaining an individual drill rod when the drill rod is being moved. The gripping means includes a locking means for locking the gripping means when the gripping means is grasping and retaining an individual drill rod. A shock absorbing means is connected to the arm means for absorbing the forces generated when the drill head of the earth boring machine contacts and engages an individual drill rod.

It is, therefore, an object of the present invention to provide an improved drill rod handling apparatus for an earth boring system.

It is a further object of the present invention to provide a drill rod handling apparatus for an earth boring system that will prevent the dropping of drill rods.

It is a still further object of the present invention to provide a drill rod handling apparatus for an earth boring machine that will prevent the dropping of a drill rod when the drill rod is being engaged by the drill head of an earth boring machine.

It is a still further object of the present invention to provide a drill rod handling apparatus for an earth boring machine that will retain an individual drill rod with a single gripper.

It is a still further object of the present invention to provide a drill rod handling apparatus for an earth boring machine that will retain an individual drill rod even if the hydraulic pressure of the system is lost.

It is a still further object of the present invention to provide a drill rod handling apparatus for an earth boring machine that will allow a limited amount of vertical movement of an individual drill rod during the rod handling operation.

It is a still further object of the present invention to provide a drill rod handling apparatus for an earth boring machine that includes a shock absorber that will prevent bending and damaging of the structural elements of the drill rod handling apparatus.

It is a still further object of the present invention to provide a drill rod handling apparatus for an earth boring machine that will absorb the downward force produced when the drill head of the earth boring machine strikes an individual drill rod.

It is a still further object of the present invention to provide a drill rod handling apparatus for an earth boring machine that will absorb the upward force produced when an individual drill rod is being engaged by the drill head of an earth boring machine.

The above and other objects and advantages of the present invention will become apparent from a consideration of the following detailed description of the invention when taken in conjunction with the accompanying drawings.

BRIEF DESCRIPTION OF THE DRAWINGS

FIG. 1 is a view in perspective of an earth boring ma-

chine with an embodiment of the drill rod handling apparatus of the present invention connected to the machine.

FIG. 2 is a side view of the gripping elements of the drill rod handling apparatus shown in FIG. 1.

FIG. 3 is a side view of the arm means and the shock absorbing means of the drill rod handling apparatus shown in FIG. 1.

FIG. 4 is a side view of another embodiment of a gripping means constructed in accordance with the Present invention.

DETAILED DESCRIPTION OF THE INVENTION

Referring now to the drawings and in particular to FIG. 1, an earth boring machine indicated generally by the reference numeral **10** is shown anchored to the ground by base elements **11** and **12.** In order to be certain that the earth boring machine **10** is firmly affixed to the ground, a concrete foundation pad (not shown) may be installed and the base elements **11** and **12** firmly attached thereto. A pair of support columns **13** and **14** are connected to the base elements **11** and **12** by hinges (not shown) to allow the support columns **13** and **14** to pivot. A pair of braces **15** and **16** extend between the base elements **11** and **12** and the upper sections of support columns **13** and **14.** It can be appreciated that the length of the braces **15** and **16** determines the angle the support columns **13** and **14** make with the horizontal and consequently, the drilling angle. It is, therefore, possible to adjust the support column angle and the drilling angle for various drilling operations by replacing braces **15** and **16** with braces of a different length or by providing braces that are adjustable. A carriage **17** is mounted for travel along the support columns **13** and **14.** The carriage **17** extends between the support columns **13** and **14** and is mounted in guides in the support columns **13** and **14.** Means (not shown) including a double-acting hydraulic thrust cylinder are provided to move the carriage **17** up and down along the support columns **13** and **14.** The carriage **17** supports a drill head assembly **18** including a drill rod chuck **19.** A power unit, including motors **20** and **21,** drives the drill head assembly **18** thereby rotating drill rod chuck **19.**

During a raise drilling operation, a small pilot hole is drilled to another level of a mine. The small diameter pilot bit is removed from the drill column and a large diameter raise bit is attached. The raise bit is then rotated and moved upward to enlarge the pilot hole to the desired size. During the drilling of the pilot hole, individual drill rods are added to the drill column as the pilot hole extends further and further into the formations. When the small diameter pilot hole is being enlarged into a large diameter hole, individual drill rods must be removed from the drill column as the large diameter bit moves closer to the earth boring machine. For example, when the earth boring machine **10** is being used to drill a small diameter pilot hole, individual drill rod sections such as drill rod **22** must be added to the drill column. When the drill head **18** reaches its lowest position in the earth boring machine **10,** the first drill rod **23** of the drill column is engaged by a slip plate **24** in a slip table **25** connected to the earth boring machine **10.** The drill rod chuck **19** is disengaged from the first drill rod **23** and the carriage **17** and drill head assembly **18** are moved to the upper position shown in FIG. **1.** With the drill head **18** in the upper position, a drill rod **22** is moved into line with the drill column and the drill rod chuck **19.** The drill head assembly **18** is then moved downward until the drill rod chuck **19** comes into contact with the upper portion of the drill rod **22.** The drill rod chuck **19** is then engaged with the upper portion of the drill rod **22** and the lower portion of the drill rod **22** is engaged with the upper portion of the first drill rod **23** of the drill column. The drilling operation is then ready to proceed and drilling continues until it is necessary to add another drill rod wherein the operation just described is repeated. A more detailed explanation of the operation of adding and removing drill rods from the drill column of an earth boring machine is described in U.S. Pat. No. 3,446,284 to N. D. Dyer et al., patented May 27, 1969. It is to be understood that the drilling operation may also be conducted upward into the formations above the earth boring machine **10** and that the drilling angle of the drilling operation may be inclined.

A drill rod handling apparatus constructed in accordance with the present invention is attached to the support column **13** of the earth boring machine **10.** A base plate **26** is firmly affixed to the support column **13.** A first arm **27** is connected to the base plate **26** by a pin **28** and the first arm **27** is adapted to turn in a plane parallel to the plane of the support column **13** by rotating about pin **28.** An extension **29** projects from one end of the first arm **27.** A double-acting hydraulic cylinder **30** is connected between the extension **29** and a connecting plate **31** affixed to the support colmn **13.** The movable piston rod **32** of the hydraulic cylinder **30** is connected to the extension **29** by a pin **33.** Actuation of the double-acting hydraulic cylinder **30** causes the first arm **27** to rotate about pin **28** and turn in a plane parallel to the plane of the support column **13.**

A rod positioner gate **34** is pivotally connected to the first arm **27** and adapted to turn relative to the first arm **27.** The rod positioner gate **34** includes a second arm **35** and a third arm **36** that project away from the first arm **27.** A double-acting hydraulic cylinder **37** is connected between the first arm **27** and the third arm **36** to provide the force for turning the rod positioner gate **34** relative to the first arm **27.** A first gripper (not shown) is positioned near the outer end of the second arm **35** and adapted to grip an individual drill rod. A second gripper **38** is positioned near the outer end of the third arm **36** and adapted to grip an individual drill rod. The structural details of the grippers will be described subsequently.

The operation of positioning an individual drill rod into line with the axis established by the axis of the drill column and the drill head and connecting the drill to the drill column is ready to begin when the drill head assembly **18** has reached the upper position shown in FIG. **1.** The first drill rod **23** of the drill column has been engaged by the slip plate **24** and the drill column is suspended in the hole. The drill chuck **19** has been disconnected from the first drill rod **23** and the drill head assembly **18** moved upward. The piston rod **32** of the hydraulic cylinder **30** has been moved to the retracted position and the first arm **27** has rotated on pin **20** until the rod positioner gate **34** is in a position to receive the drill rod **22.** The positioning operation begins with the placement of the drill rod **22** in position on the rod positioner gate **34.** The grippers on the second arm **35** and third arm **36** are actuated to grip the drill rod **22.** The grippers lock firmly onto the drill rod **32** in a

manner that wil be explained subsequently. The hydraulic cylinder **30** is actuated causing the piston rod **32** to move downward thereby rotating the first arm **27** about pin **28** and moving the drill rod **22** to a position parallel to the drill column **23**. The hydraulic cylinder **37** is then actuated turning the rod positioner gate **34** relative to the first arm **27** and moving the drill rod into line with the axis established by the central axis of the drill column and the drill rod chuck **19**. The drill head **18** is moved downward until the drill rod chuck **19** contacts the threads on the upper end of the drill rod **22**. A shock absorber **39** positioned between the rod positioner gate **34** and the first arm **27** receives the shock of the drill head assembly **18** contacting the drill rod **22** thereby preventing the drill rod handling apparatus from being damaged and the drill rod **22** from being dropped. The drill rod chuck **19** is then rotated to engage the drill rod **22**. This causes some vertical movement of the drill rod **22** and the shock of this movement is absorbed by the shock absorber **39**. The grippers are actuated to release their grip on the drill rod **22** and the drill head assembly **18** is moved downward until the lower end of the drill rod **22** contacts the first drill rod **23** of the drill column. The drill rod chuck **19** is then rotated causing the drill rod **22** to engage the threads on the upper end of the first drill rod **23** of the drill column. The earth boring system is then ready to continue the drilling operation. Drill rods may be removed from the drill column by reversing the operation just described.

Referring now to FIG. **2**, one of the grippers of the drill rod handling apparatus illustrated in FIG. **1** is shown. The gripper includes a fixed gripping arm **40** connected to the outer end **41** of one of the arms of the rod positioner gate **34**. A movable gripping arm **42** is connected to the outer end **41** by a pin **43**. The movable gripping arm **42** is adapted to move from the position shown wherein it is in contact with and gripping the drill rod **22** to a position removed from the drill rod **22**. Movement of the movable gripping arm **42** is provided by a double-acting hydraulic cylinder **44** connected between the outer end **41** of the arm and a pair of linking elements **45** and **46**. The upper linking element **45** is pinned to the upper end of the movable gripping arm **42** by a pin **47** and the lower linking element **46** is connected to the outer end **41** of the arm by a movable pin **48**. The upper linking element and the lower linking element are connected together by a pin **49**. When the movable gripping arm **42** is in a position gripping the drill rod **22**, the pin **49** has moved beyond a line established by pins **47** and **48** and the movable gripping arm **42** is mechanically locked to the drill rod **22**. The pin **49** is beyond center and the force transmitted from the movable gripping arm **42** to the outer end **41** of the arm through linking elements **45** and **46** keeps the movable gripping arm **42** mechanically locked to the drill rod **22**. A loss of hydraulic pressure in the hydraulic cylinder **44** will not cause the gripper to release its hold on the drill rod **22**. An adjustment screw **50** allows the movable gripping arm **42** to be positioned for different sizes of drill rods by adjusting the location of the movable pin **48**. The hydraulic cylinder **44** is connected to the outer end **41** of the arm by a pin **51**. The piston rod **52** of the hydraulic cylinder **44** is pinned to an intermediate linking element **53** by a pin **54**. The intermediate linking element **53** is also connected to the linking elements **45** and **46** by pin **49**. The hydraulic cylinder **44** may be actuated to release the hold of the gripper on drill rod **22**. The piston rod **52** is moved outward causing the pin **49** and linking elements **45** and **46** to move outward thereby moving the movable gripping arm **42** away from the drill rod **22**. A spring may be provided between the movable gripping arm **42** and the outer end **41** of the arm to maintain a bias between the movable gripping arm **42** and the outer end **41** of the arm.

Referring now to FIG. **3**, a side view of the rod positioner gate **34** is shown illustrating the manner in which it is connected to the first arm **27** by a shock absorber **39**. The upper end of the shock absorber **39** is connected to a brace **55** projecting from the rod positioner gate **34**. The lower portion of the shock absorber **39** is connected to a brace **56** projecting from the first arm **27**. A guide rod behind the shock absorber **39** is also connected between the braces **55** and **56**. The guide rod extends through a brace **57** projecting from the first arm **27** and a brace **58** extending from the rod positioner gate **34** and provides a pivot to allow the rod positioner gate **34** to turn relative to the first arm **27**. A flexible rubber mounting **59** is positioned between the brace **57** and brace **55** and a flexible rubber mounting **60** is positioned between the brace **56** and brace **58** to bias the rod positioner gate vertically upward relative to the first arm **27**. Any vertical movement of the rod positioner gate resulting from contact with the drill head assembly **18** or engagement of the drill rod **22** with the drill chuck **19** is absorbed by the shock absorber **39** and the drill rod handling apparatus will not be damaged. Rotational movement of the rod positioner gate **34** relative to the first arm is produced by a double-acting hydraulic cylinder **37**. The cylinder **37** is connected to a brace **61** by a pin **62** and the movable piston rod **63** of the cylinder **37** is connected to the lower arm **36** of the rod positioner gate **34** by a pin **64**.

Referring now to FIG. **4**, another embodiment of a gripper constructed in accordance with the present invention is shown. The gripper includes a fixed gripping arm **65** mounted near the outer end of an arm **66** of a drill rod handling apparatus. A movable gripping arm **67** is pivotally connected to the arm **66** by a pin **68**. The movable gripping arm **67** is adapted to move from the position shown in FIG. **4** to a position wherein it contacts and securely grips the drill rod **69**. A spring **70** is connected between the arm **66** and the movable gripping arm **67**. A pair of linking elements **71** and **72** connect the upper portion of the movable gripping arm **67** with the arm **66**. Linking element **71** is connected to the upper portion of the movable gripping arm **67** by a pin **73** and linking element **72** is connected to the arm **66** by a movable pin **74**. The position of the movable pin **74** can be adjusted by the adjusting screw **75**. A handle **76** is connected to one end of the linking element **71** and the linking elements **71** and **72** are connected together by a pin **77**.

The gripper will firmly engage a drill rod and lock in position engaging the drill rod as it is moved into or out of position in the drill column of an earth boring system. With the movable gripping arm **67** in the open position shown in FIG. **4**, a drill rod may be placed against the fixed gripping arm **65**. The handle **76** is moved downward forcing the movable gripping arm **67** into contact with the drill rod **69**. Additional pressure on the handle **76** moves the pin **77** past the center line established by pins **73** and **74**. With the pin **77** beyond

center, the gripper has mechanically locked on drill rod **69** in the gripping position and dropping of the drill rod **69** is prevented. Two grippers are generally provided on a drill rod handling apparatus but it can be appreciated that a single gripper constructed in accordance with the present invention will retain a drill rod in position as it is being moved into or out of the drill column of an earth boring system.

The embodiments of an invention in which an exclusive property or privilege is claimed are defined as follows:

1. A drill rod handling apparatus for an earth boring machine wherein the earth boring machine includes drilling means for supplying drilling force to a drill column and said drill column includes individual drill rods connected together end to end to form said drill column, comprising:

arm means for moving an individual drill rod into and out of line with the drill column;

a gripper means connected to said arm means for grasping a drill rod when said drill rod is being moved, said gripper means including a movable gripping arm;

locking means connected to said gripper means for securely locking said gripper means in grasping relationship to said drill rod when said drill rod is being moved, said locking means including a first linking element connected to said movable gripping arm, a second linking element connected to said arm means, a hinge means for connecting said first linking element to said second linking element and means for moving said hinge means relative to said arm means thereby locking or unlocking said movable gripping arm on said drill rod, said means for moving said hinge means including a hydraulic cylinder; and

shock absorbing means connected to said arm means for absorbing shock when said drilling means contacts said drill rod.

2. A gripper for a drill rod handling apparatus that will grip and retain a drill rod thereby removably connecting the drill rod to an arm of the drill rod handling apparatus, comprising:

a first gripping arm connected to said arm of the drill rod handling apparatus;

a second gripping arm pivotally connected to said arm of the drill rod handling apparatus;

means for moving said second gripping arm into contact with said drill rod and locking said second arm in engagement with said drill rod, said means for moving said second gripping arm into contact with said drill rod and locking said second arm in engagement with said drill rod including a first linking element pivotally connected to said second gripping arm, a second linking element pivotally connected to said arm of the drill rod handling apparatus and hinge means for connecting said first linking element to said second linking element;

means for moving said hinge means thereby locking or unlocking said second arm in engagement with said drill rod, said means for moving said hinge means being a hydraulic cylinder;

a movable pin connecting said second linking element to said arm of the drill rod handling apparatus, and

a positioning element for moving said movable pin relative to the arm of said drill rod handling apparatus.

3. A drill rod handling apparatus for an earth boring machine, said earth boring machine having a support frame and drilling means mounted to travel along said support frame for supplying drilling force to a drill column wherein said drill column includes individual drill rods connected together end to end with the first drill rod of the drill column adapted to be connected to said drilling means, comprising:

arm means connected to said support frame for moving an individual drill rod into and out of line with the drill column said arm means including a first arm and a second arm;

gripping means connected to said arm means for grasping and retaining the drill rod when said drill rod is being moved; and

shock absorbing means connected to said arm means for absorbing shock when said drilling means contacts said drill rod, said shock absorbing means including a shock absorber positioned between said first arm and said second arm.

* * * * *