United States Patent [19]

Rusbach

[11] **3,762,269**

[45] **Oct. 2, 1973**

[54] **TRIPED MOUNTING WITH LEVELLING DEVICE FOR PROJECTILE LAUNCHER**

[75] Inventor: **Maurice Rusbach,** Vernier-Geneva, Switzerland

[73] Assignee: **Sarmac S.A.,** Carouge/Geneva, Switzerland

[22] Filed: **July 26, 1971**

[21] Appl. No.: **166,111**

[30] **Foreign Application Priority Data**

Aug. 6, 1970 Switzerland 11827/70

[52] **U.S. Cl.** ..... **89/40 E,** 89/1.815, 89/41 A, 248/170

[51] **Int. Cl.** **F41f 3/04**

[58] **Field of Search** ..... 89/1.815, 1.816, 89/37 B, 40 E; 42/94; 248/169, 170, 435, 46, 171; 102/34.2, 37.4, 37.52

[56] **References Cited**

UNITED STATES PATENTS

1,602,764	10/1926	Gorton	89/40 E
3,167,278	1/1965	Roberge	89/1.816
3,608,852	9/1971	Horn	42/94
2,347,443	4/1944	Vesely	248/170
2,095,490	10/1937	Decker	102/34.2
334,496	1/1886	Weeden	89/1.815
2,795,386	6/1957	Elsey	102/37.4

FOREIGN PATENTS OR APPLICATIONS

371,493	4/1932	Great Britain	89/40 E

Primary Examiner—Stephen C. Bentley
Attorney—Young & Thompson

[57] **ABSTRACT**

A tripod mounting for suppprting a projectile launching device has an upright mast and a pair of arms pivotally connected to the mast for vertical swinging movement relative to the mast in vertical planes that are perpendicular to each other. The arms are lockable in vertically adjustable positions. The mast carries the projectile launching device at its upper end; and the tripod can be levelled, that is, the mast made precisely vertical, by only two adjustments, one for each arm, instead of by successive approximations as in previous devices that have two vertically swingable arms whose planes of movement are not perpendicular to each other.

1 Claim, 21 Drawing Figures

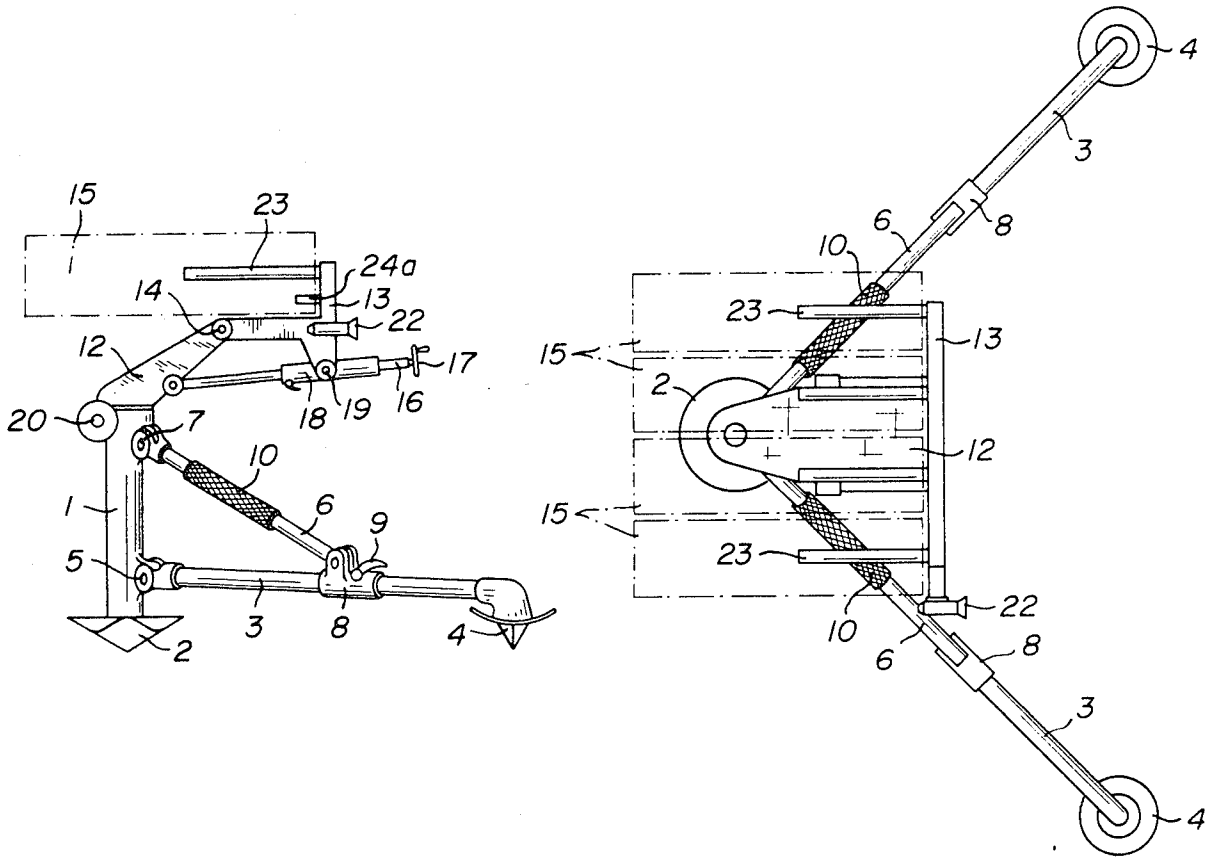

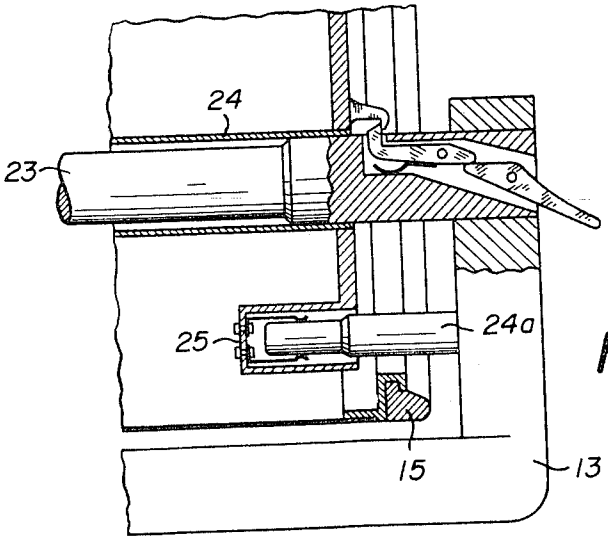

FIG. 1

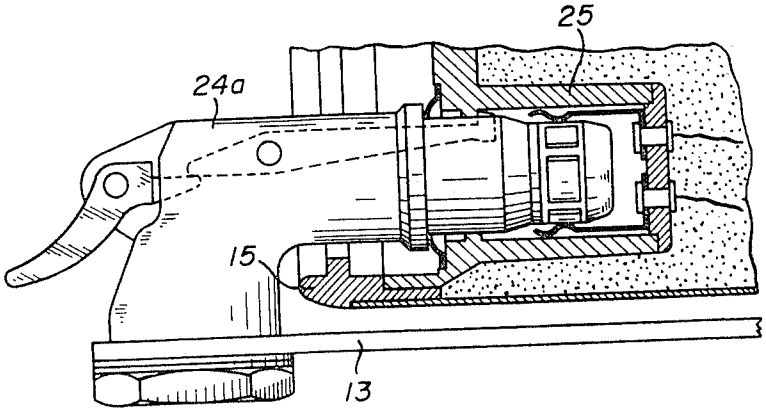

FIG. 12

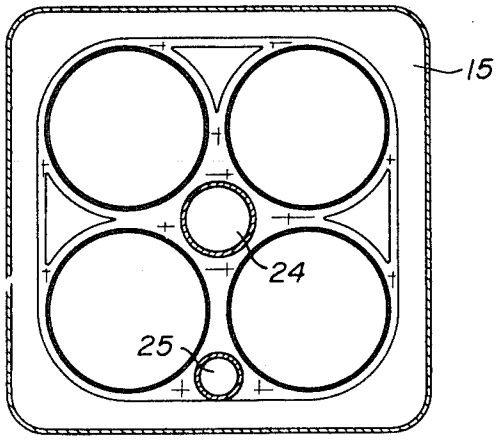

FIG. 2

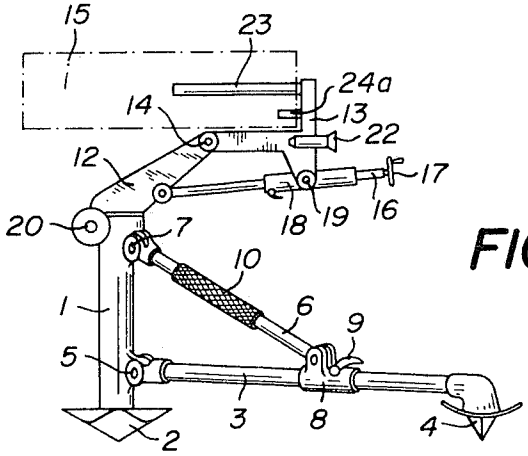

FIG. 3

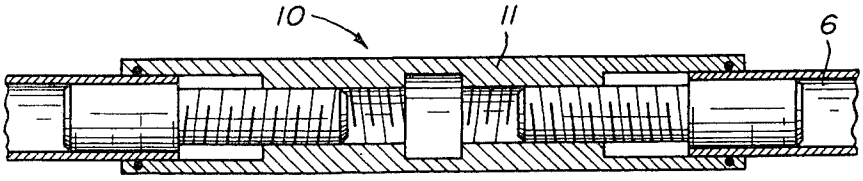

FIG. 5

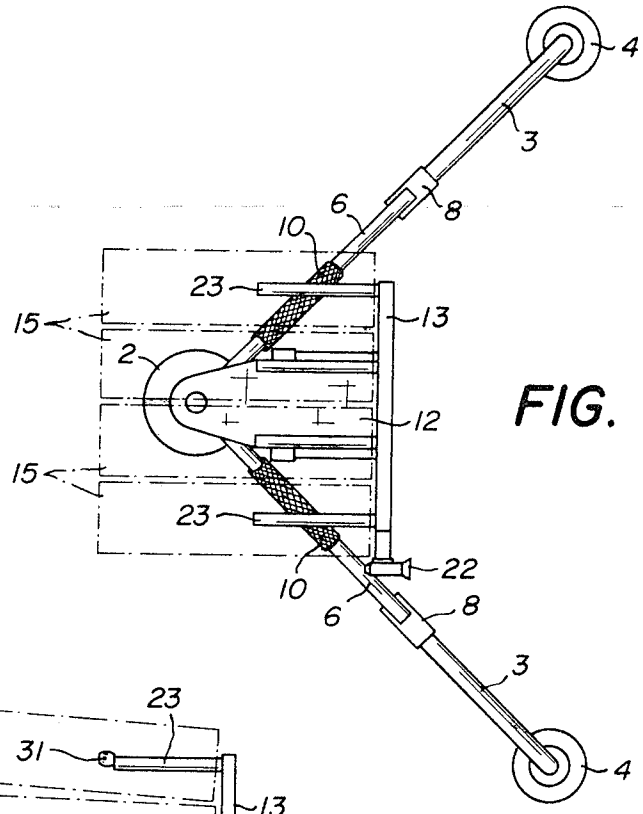

FIG. 4

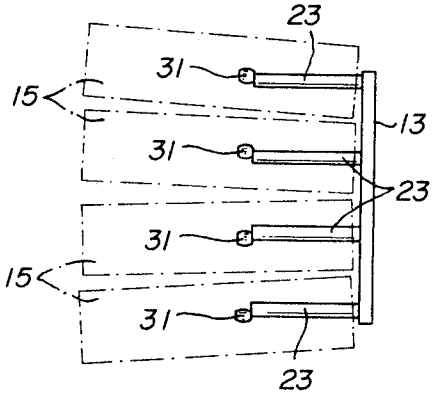

FIG. 7

FIG. 6

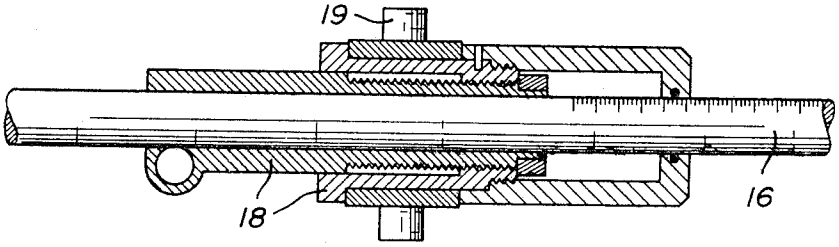

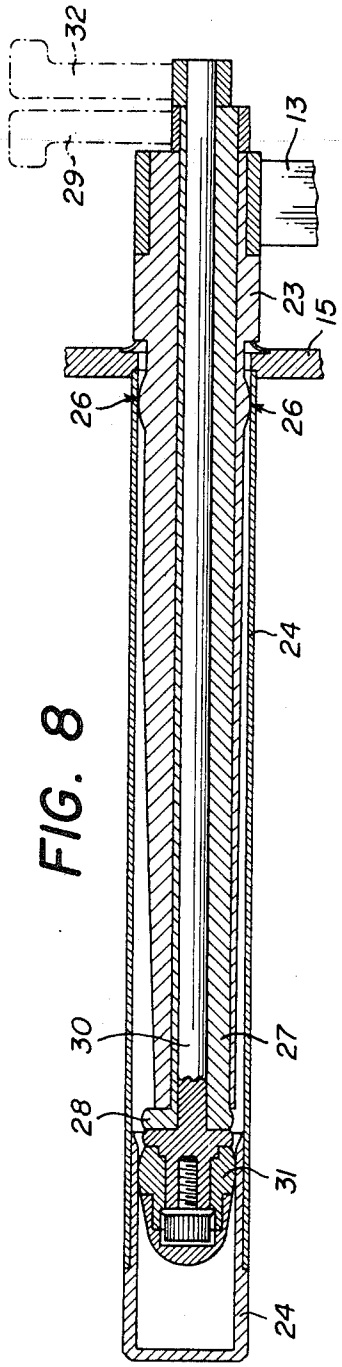

FIG. 8

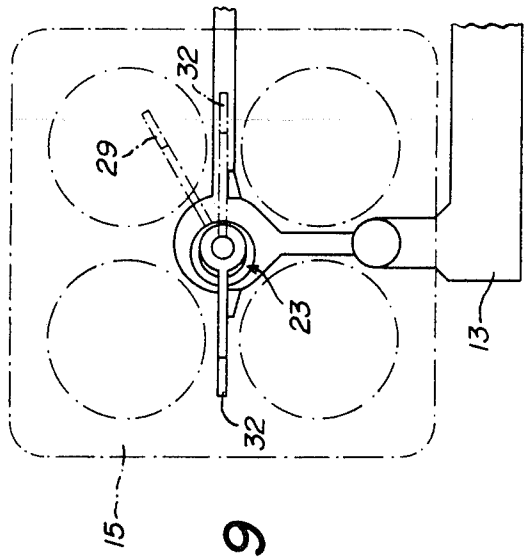

FIG. 9

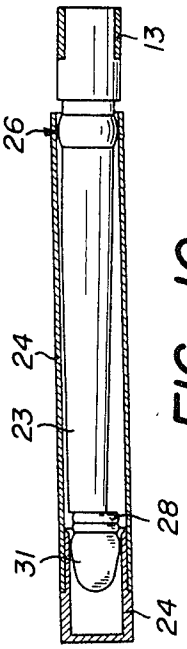

FIG. 10

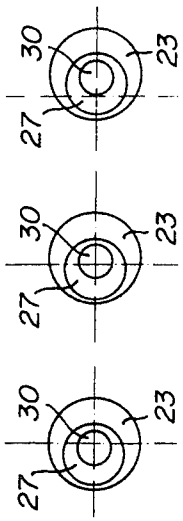

FIG. 11

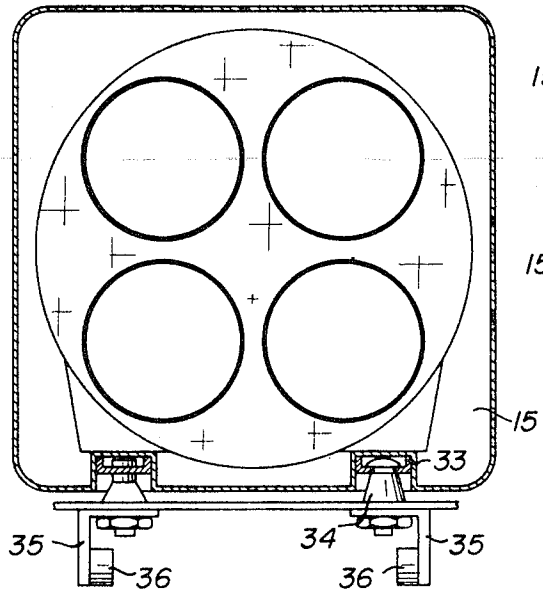

FIG. 13

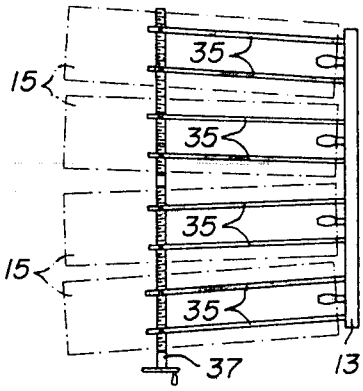

FIG. 16

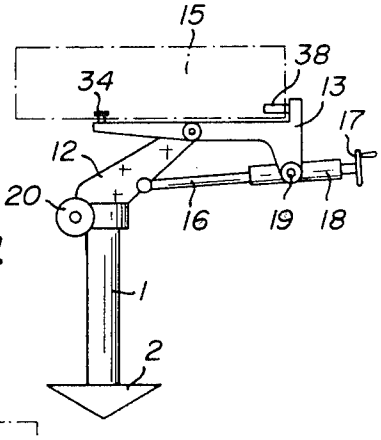

FIG. 14

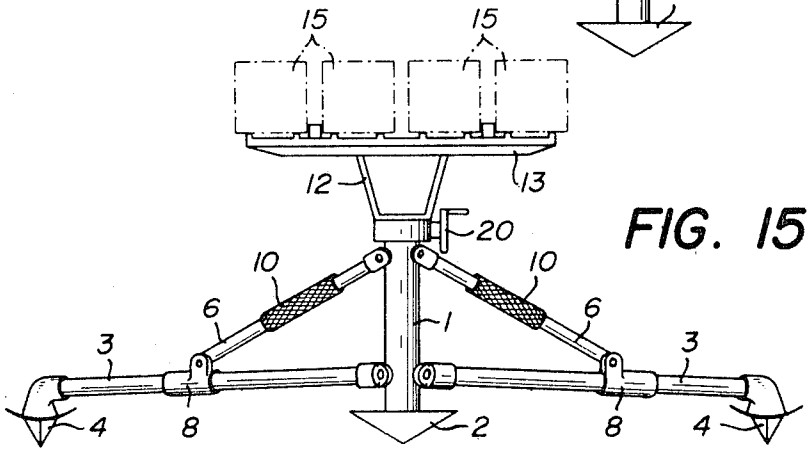

FIG. 15

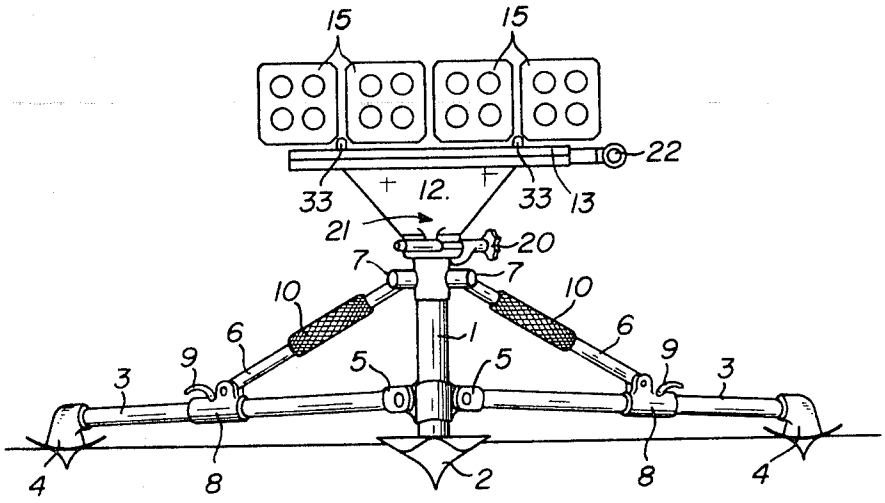
15
15
22
33
12.
33
13
21
20
7
7
10
10
6
6
1
9
9
5
5
3
3
4
8
2
8
4

FIG. 17

FIG. 18

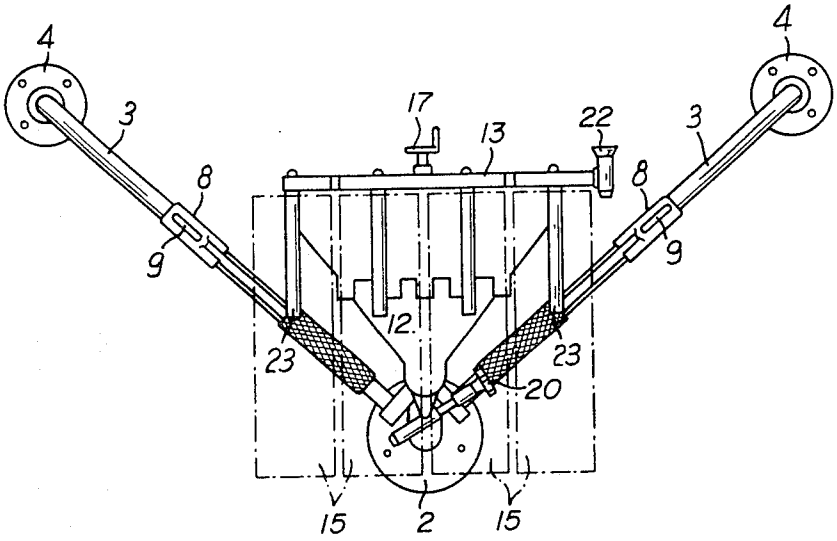
4
4
3
3
17
13
22
8
8
9
9
12.
23
23
20
15
2
15

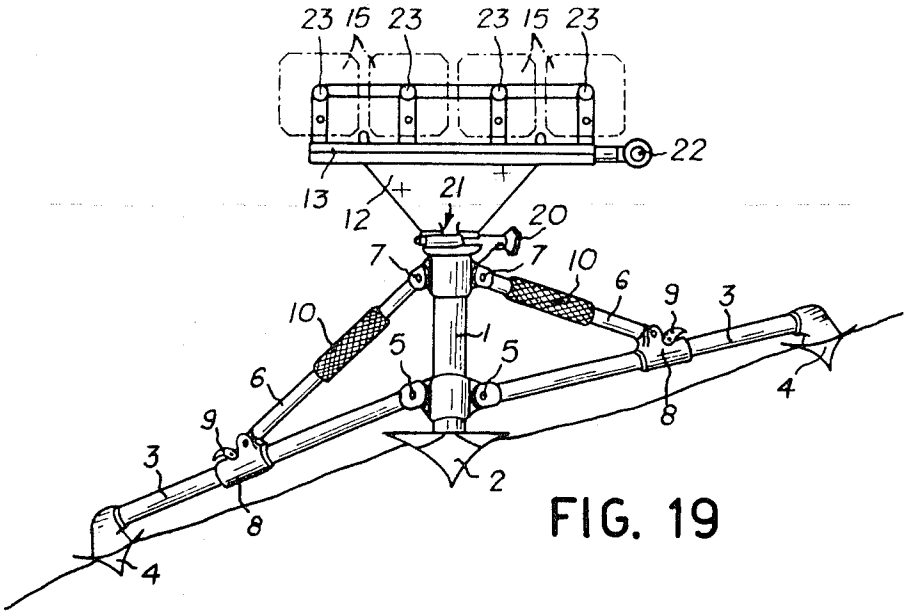
23 15 23
23 15 23
22
13
12
21
20
7
7
10
6
9
3
10
1
5
5
6
9
3
8
4
8
2
4

FIG. 19

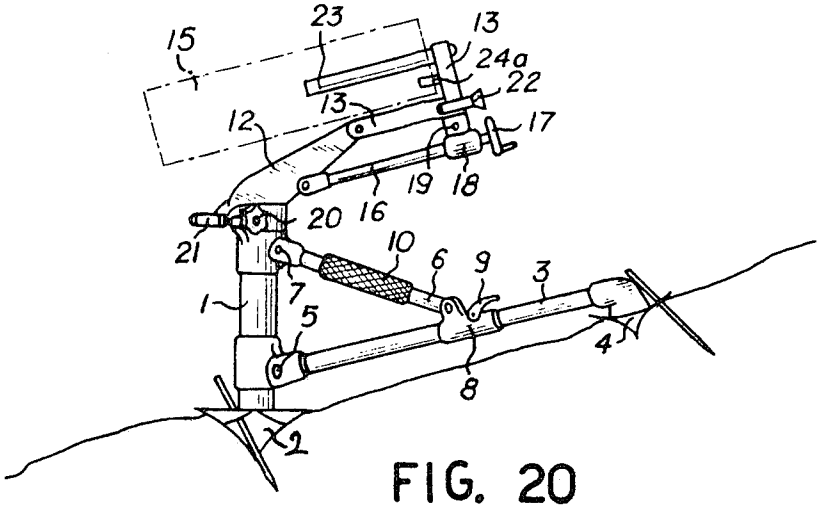
23
13
15
24a
22
13
12
17
19
18
16
20
21
10
6
9
3
7
1
5
4
8
2

FIG. 20

FIG. 21

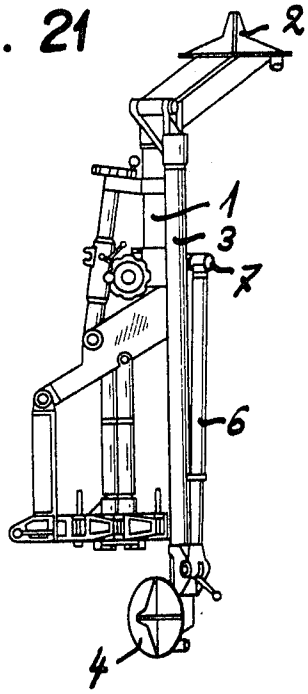

TRIPED MOUNTING WITH LEVELLING DEVICE FOR PROJECTILE LAUNCHER

The present invention relates to a tripod mounting for an infantry weapon and more particularly for firing, transporting and storing cases, as disclosed in Swiss Pat. No. 498,359.

The main disadvantage of the existing tripod mountings or aiming tripods lies in their mechanical complication, due mainly to the necessity to provide an out-of-plumb correction device, which also involves adjustments which are complex and sometimes long, when bringing the weapon into its firing position.

The present invention relates to a tripod mounting which seeks to overcome the above disadvantages, characterized in that it comprises a mast which is intended to be positioned vertically and two orientable arms carrying a carrier intended to receive ammunition, controls for height and direction aiming, and an aiming apparatus.

The accompanying drawing diagrammatically illustrates by way of example various embodiments of the tripod mounting according to the invention.

FIG. 1 shows a detail of the locking of a firing case onto the carrier of the mounting,

FIG. 2 is a cross-sectional view of a firing case intended to be fixed to the tripod mounting,

FIG. 3 is an elevational side view of the tripod mounting,

FIG. 4 is a plan view from above of the tripod mounting,

FIG. 5 shows a device for adjusting the length of a bracing member for an arm of the mounting,

FIG. 6 shows a part of the height aiming device,

FIG. 7 is a view of part of the tripod illustrating the effect of the device for controlling the firing spread,

FIG. 8 shows a pin of the carrier, the pin being intended to receive a firing case and being provided with its device for controlling the firing spread, the latter device being in the neutral position,

FIGS. 9 and 10 show front and side views of the pin of FIG. 8, the firing spread control device being in the active position,

FIG. 11 shows three different positions of the pin, as achieved by means of the firing spread control device,

FIG. 12 shows the electrical connection of a firing case to the tripod mounting,

FIG. 13 shows another mechanical fixing means for fixing a firing case to a mounting,

FIG. 14 is an elevational side view showing parts of the tripod mounting provided with firing cases as illustrated in FIG. 13,

FIG. 15 is an elevational front view of the tripod mounting shown in FIG. 14,

FIG. 16 shows a firing spread control device for the embodiment of the tripod mounting shown in FIGS. 13 to 15,

FIGS. 17 and 18 are elevational front and plan views respectively of an alternative embodiment of the tripod mounting,

FIGS. 19 and 20 are elevational front and side views respectively showing the adaptation of the tripod mounting to an uneven ground surface,

FIG. 21 shows the tripod mounting in its folded position.

The tripod mounting according to the present patent is intended to receive firing, transporting and storing boxes containing projectiles, which may or may not be re-usable and re-chargeable. Once the salvo has been fired, re-arming of the weapon is effected by simply replacing empty cases by loaded cases.

It is so designed that fitting an ammunition case simultaneously and automatically ensures that the projectiles of that case are connected to the electrical firing device. In addition, as will be apparent hereinafter, the tripod mounting enjoys a degree of robustness, simplicity in design and handling, and efficiency, which are as yet unequalled.

The tripod mounting comprises a mast **1** which is intended to be placed vertically, provided with a foot member **2**, two arms **3** of which one of the ends is pivoted on the mast about an axis **5** perpendicular to the mast **1**, while the other end is provided with a foot member **4**.

Bracing members **6** are pivoted at one of their ends on the mast **1** about an axis **7** which is perpendicular to the mast **1**. The other free end of each of the bracing members **6** is pivoted on a sleeve **8** which is slideable along the corresponding arm **3** and which is provided with a locking device **9** which permits the sleeve **8** to be made rigid to the arm **3**. These bracing members **6** comprise a device **10** for adjusting their length, as illustrated in detail in FIG. **5**. Simply rotating the knurled sleeve **11** in one direction or the other permits a reduction or an increase in the length of the bracing members **6**, by virtue of the knurled sleeve **11** having threaded parts with threads in opposite directions.

In the firing position, the arms **3** are disposed at 90° in the horizontal plane with respect to each other.

At its upper part the mast **1** carries a yoke member **12** of a carrier **13**, the pivot axis **14** of which is perpendicular thereto. The carrier **13** of the firing cases **15** being coordinated in this way with the mast **1**, the vertical position of the mast **1** therefore constitutes the base for controlling firing both in height and direction. This arrangement eliminates the problem of angle of lean, while permitting any change in aim without additional manipulation.

The arrangement of the arms **3** with their wide spacing makes it possible to adjust the mast **1** into a absolutely vertical position, irrespective of the state and the slope of the ground surface on which the tripod mounting is to be erected.

Setting the mast **1** in a vertical position is effected by acting successively on the adjusting mechanisms **8, 10** and locking mechanism **9**, combined with the bracing members **6** of the arms **3**, without it being necessary to release the connections of the latter.

Two horizontal coordinate water-level means (not shown) make it possible to check the vertical positioning of the mast **1**.

The rigidity and the substantial seating of the above tripod mounting ensures that the equipment is perfectly stable on any ground surface.

The elevation aim, which determines the range, is controlled by a screw **16** provided with an actuating member **17**, forming one of the sides of a deformable triangle formed by the yoke member **12**, the carrier **13** and the screw **16**, which engages into a threaded sleeve **18** carried on the multi-pin carrier by means of a pivot pin **19**.

Directional aiming is controlled by means of a screw **20** which acts directly on a pivot lever **21** which is rigid with the multi-pin carrier **13** and whose angular dis-

placement (60° maximum) in the horizontal plane corresponds to the desired setting. Positive locking fixes the desired position.

Thus the aiming apparatus proper comprises:

two water-level means (not shown) for checking the vertical position of the mast 1;

a direction-aiming collimator 22, similar to that of a mortar, which can be dismounted for transportation;

a reading device (not shown) for reading the angle of elevation from − 40° to +90° (range).

The carrier 13 which is intended to receive the firing cases 15 is a multi-pin carrier, each of the pins 23 being intended to secure a firing case 15 by inserting the pin 23 into a tube 24 carried by the frame of the firing case. The case will not be described in detail herein as it is the subject of U.S. application Ser. No. 116,110, filed July 26, 1971.

The cases 15 are threaded directly, side by side and by way of their rearward face, onto the guiding pins 23 of the carrier 13, and held in position by a catch fixed onto each of the pins (see FIG. 1). Below the pins, a peg 24*a* serves at the same time as a current connection and also to determine the positioning of the firing case 15 on the carrier, and peg 24*a* coming into engagement into a female connection 25 in the firing case. The carrier 13 comprises four pins 23 which are parallel in the normal position, the pins 23 each receiving a case 15. The pins are angularly adjustable in the plane of the firing direction, for wide-scatter firing, by means of a firing spread control device illustrated in particular in FIGS. 8 to 11 and 16. The fixing members and the receiving sleeve 24 are located at the centre of the four firing tubes contained in the firing boxes and are consequently protected from shock. The whole forms a homogenous assembly which is mechanically isolated from the outside casing of the firing case.

The sleeve 24 and the current connection 25 are also protected by the rearward closure cover of the firing case, until the apparatus is put into use.

In consequence, any deformation which the external casing of the firing cases could undergo, owing to shocks, cannot in any manner interfere with the fixing thereof onto the pins, and similarly as regards any foreign bodies which may be present, such as mud, sand, etc.

In order to facilitate the fitting and removal of the firing cases, the main pin 23 and its sleeve 24 are of different diameters, the effect of which is substantially to reduce the length of sliding on the same diameter, and thus to avoid any jamming of the members.

The device for controlling the spread of firing, as illustrated in FIGS. 8 to 11, comprises an eccentric bore in the pin 23, the external surface of which, in the vicinity of the carrier 13, comprises a first abutment shoulder 26 which is intended to come into contact with the internal surface of the sleeve 24 fixed in the firing case 15.

Placed in the eccentric bore is a rod 27 which is positioned axially in such a manner that the axis of the bore is in the axis of the pin 23, in the neutral or rest position of the device.

The rod 27 is mounted rotatably in the pin 23 and its front end is provided with an abutment 28 which bears against the front portion of the pin 23, while its free rearward end which projects out of the pin 23 is provided with an actuating member 29.

Rotatably mounted in the bore in the pin 23 is a bar 30 which is provided at its front end with an eccentric 31 which at the same time forms the second boss which comes into contact with the internal surface of the sleeve 24. The rearward free end of the bar 30 is provided with an actuating member 32. By acting on the two actuating members 29 and 32, it is therefore possible to displace the second boss 31 relative to the first boss 26 in such a way that the axis of the sleeve 24, that is to say of the envelope lying tangentially to the bosses, can assume any position whatever within a cone, the angle at the point of which is given by the structural dimensions of the device.

It is therefore possible appreciably to increase the surface area of the bombarded zone, both in its width and in its length, by resorting to a prepared scatter which is capable of providing a greater spacing between the impacts. That makes it possible for example effectively to cover an area of large width, taking into account the range; for example: 30m × 30m at maximum range.

This scatter is achieved by the angular displacement in the horizontal plane and relative to the initial line of aim, of the axes of the four pins on which the firing boxes are fixed. A simple initial adjustment is effected by means of a limited-travel rotary sleeve (not shown) which acts on the pivoted arms 29, 32 connected to the pins. A number of intermediate positions starting from the parallel are possible.

The tripod mounting can be very rapidly set into position (in a time of the order of 1 minute under normal conditions), the operations being as follows:

selection of the emplacement (preparing the ground if necessary);

unlocking and unfolding the arms 3;

placing the tripod mounting on the ground;

rough adjustment of the vertical position of the mast 1, by freeing the sleeves 8 which are slideable on the arms 3;

locking the sleeves 8 on the arms 3;

if necessary, driving an anchoring stake through the pads 4, or using special support plates (in the case of snow-covered, muddy or sandy ground);

concluding the operation of setting the mast 1 in its vertical position by acting on, that is by tightening or untightening, the rearward swivel rings 11 mounted on the bracing members 6 (varying their length);

checking the two water-level means (not shown);

fixing the collimator 22 and setting level its site angle corrector (not shown);

fitting the firing cases;

adjusting the scatter and the angle of directional aiming of the orientable pins 23;

aiming by means of the collimator.

It can be seen that because the mast 1 is in a vertical position, any change in the aiming as regards height or direction does not in any way modify the position of the carrier 13, which makes any correction of the angle of lean unnecessary.

FIGS. 17 to 20 show the vertical positioning of the tripod mounting, and in particular the adaptability thereof to the ground surface.

The mounting does not have any independent member and forms an assembly which can be carried on a mansback by means of belts, with the greatest of ease.

The arms 3 and the multi-pin carrier 13 are foldable by a pivotal action, so as to come to lie along the mast

1 to form a load of small size, thus facilitating movement of the mounting. This operation is effected in a few moments, without any dismantling, and the assembly, the weight of which does not exceed of a firing case, that is to say 12 kg, can be contained in a case provided for that purpose.

In an alternative embodiment illustrated in FIGS. 13 to 16, the firing cases are fixed on the carrier 13 by fixing members 33 which co-operate with lugs 34 which are fixed to the carrier 13. For each firing case, the carrier 13 comprises the lugs 34 which are mounted on arms 35 pivotally connected to the carrier 13. These arms 35 comprise nuts 36 which are engaged with a screw 37 with portions having reverse-direction threads or at least threads of different pitches, so as to cause a change in the firing scatter, that is to say in the aim of the firing case 15.

An electric pin carried by the carrier 13 fixes the longitudinal position of each firing case 15 and at the same time connects the electrical devices for priming the projectiles contained in the firing case to the firing device (not shown).

In an alternative embodiment, the pins 23 are each mounted on a part of the carrier 13; these parts are pivotal relative to each other. A screw which is engaged with nuts fixed on each of the parts of the carrier permits a change in the relative angular position of the pins carried by the different parts of the carrier, in order to adjust the desired firing scatter.

Alternative embodiments can be provided in which the tripod mounting comprises a mast 1 which does not touch the ground but which would be provided with three arms 3 arranged around the mast 1 by lying at angles of 120° relative to each other. The lower end of the mast 1 could have a telescopic portion intended to rest on the ground while the tripod is set in position.

In FIG. 17, it can be seen that the carrier 13 is provided with a pivot 33 which makes it possible to fold it in order to reduce the space which it occupies, for transportation thereof.

The rod 16 of the height aiming device can be provided with graduations 34 which co-operate with an indicator mark, for example the end of the sleeve 18, and make it possible to indicate the angular elevational position of the carrier 13 relative to the horizontal.

It will be noted that in all the embodiments described herein, the centre of gravity of the carrier 3 and its yoke member 12 is located, seen from above, within the polygon defined by the points at which the tripod rests on the ground.

A shock absorber could be provided between the mast 1 and the carrier 13 or its yoke member 12, to ensure that shocks due to the fixing of the firing cases on the carrier do not upset the adjusted position of the mast 1.

It will be noted that the pivots of the arms 3 on the mast 1 are as low as possible, so that when the mast 1 is adjusted to a vertical position, its point of engagement with the ground is not modified. The pad member of the mast 1 acts as a pivot on the ground when the mast 1 is adjusted into its vertical position.

In an alternative embodiment, the lower part of the mast 1 can be offset relative to the axis of the mast 1, as shown in FIGS. 17 to 20, in order to give the tripod mounting a better seating. In this case the arms 3 are so disposed that the planes passing through the arms and their respective bracing members are disposed at a right angle. This tripod mounting comprises a pivot which permits the lower part of the mast 1 to be folded for transportation. FIG. 21 illustrates the tripod mounting in its folded position.

A tie member can be provided to connect two arms together, thereby increasing the rigidity of the assembly once it has been adjusted.

The foot members 2 and 4 can comprise holes for receiving pegs or any other means for fixing them to the ground. These foot members can also be provided with removable support plates to increase the load-carrying surface area of the tripod mounting, which is recommended when erecting the mounting on snow or in mud.

The batteries of an electrical firing device can be disposed in a housing in the mast 1 or the yoke member 12, which is provided for that purpose.

Finally, the tripod mounting can comprise, mounted on the carrier 13 or the yoke member 12, an auxiliary mechanical firing device for firing projectiles which can be used for example if the cable connecting the current connection 24a of the carrier to the normal firing device were cut.

It is obvious that the carrier of the tripod mounting described can accommodate ammunition cases as described, but that the mounting can be used for example as a mounting for a recoil-less cannon or a rocket launcher.

I claim:

1. A tripod mounting for supporting a projectile launching device, comprising an upright mast, a pair of arms, means connecting the arms to the mast for vertical swinging movement of the arms relative to the mast in two vertical planes that are perpendicular to each other and that intersect along an upright line that is parallel to the axis of the mast, means carried by the upper end of the mast for supporting a projectile launching device for vertical swinging movement about an axis perpendicular to the mast, means for selectively individually securing each of said arms in any of a plurality of vertically adjusted positions relative to said mast, said securing means comprising an elongated bracing member for each of the arms, each bracing member being pivotally interconnected to the mast at one end and slidably connected to the associated arm at the other end and having locking means at said other end selectively engageable with and releasable from said associated arm, and means for selectively adjusting the length of each said bracing member.

* * * * *