United States Patent [19]

Caillouet, Jr.

[11] **3,750,123**

[45] **July 31, 1973**

[54] **SMOKE SENSING CIRCUIT WITH BATTERY STANDBY**

[75] Inventor: **Louis A. Caillouet, Jr.**, Irving, Tex.

[73] Assignee: **T. J. Connelly Construction Company, Inc.**, Dallas, Tex.

[22] Filed: **Nov. 1, 1971**

[21] Appl. No.: **194,679**

[52] **U.S. Cl.** ..... **340/237 R**, 340/237 S, 340/333

[51] **Int. Cl.** **G08b 21/00**

[58] **Field of Search** ..... 340/237 R, 276, 409, 340/333; 23/232 E, 254 E, 255 E

[56] **References Cited**

UNITED STATES PATENTS

3,479,257	11/1969	Shaver	340/237 R
3,609,732	9/1971	Kasahara	340/237 R
2,771,598	11/1956	Gerber	340/276
2,895,125	7/1959	Watts	340/409 X

Primary Examiner—John W. Caldwell
Assistant Examiner—Daniel Myer
Attorney—D. Carl Richards, Jerry W. Mills et al.

[57] **ABSTRACT**

A fire and gas alarm system utilizing a four-terminal sensing device positioned in the environmental region to be monitored. The sensing device includes a pair of resistance heating wires spaced apart by a conducting core and encompassed by an outer metallic shell. A transformer powers a pair of rectifiers which supply current to both a normally operated standby relay and the four-terminal smoke and gas sensing device. When hydrocarbon vapors or smoke impinges upon the metallic shell of the sensing device, the resistance between the pair of heater wires drops to operate a relay and produce an alarm indication. Upon failure of a.c. power, the standby relay is released to connect battery power to the circuit and insure continued operation in response to an alarm condition.

3 Claims, 2 Drawing Figures

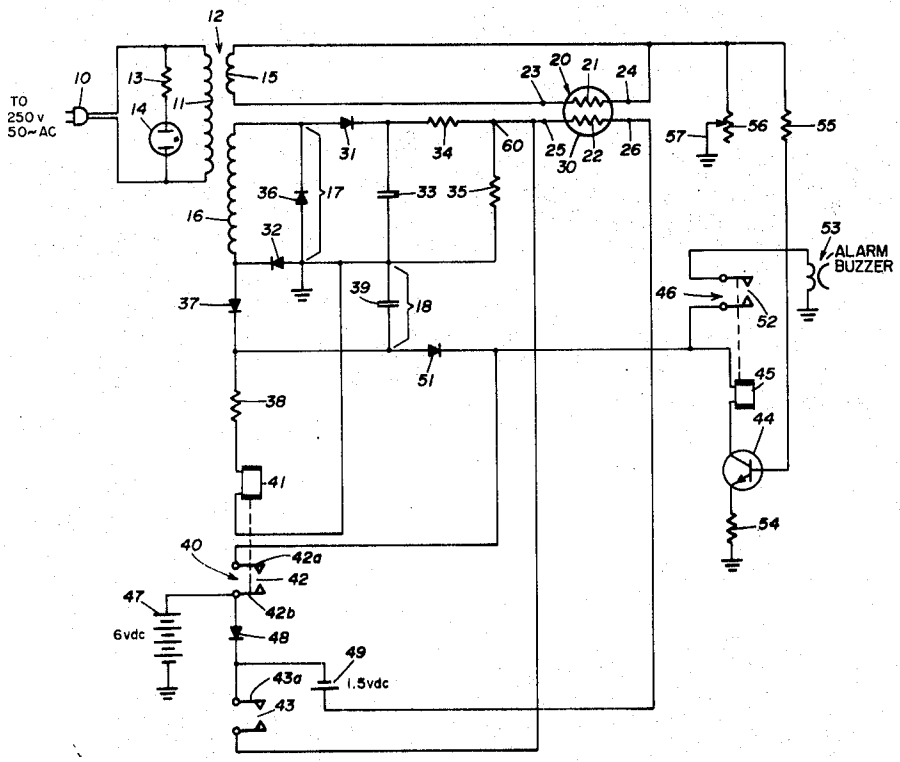

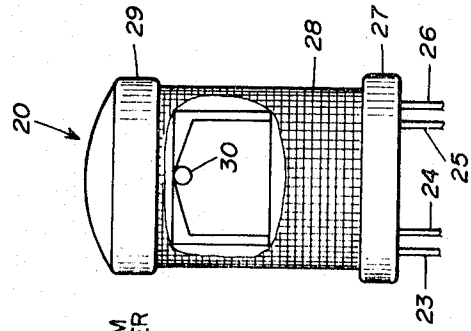

FIG. 2

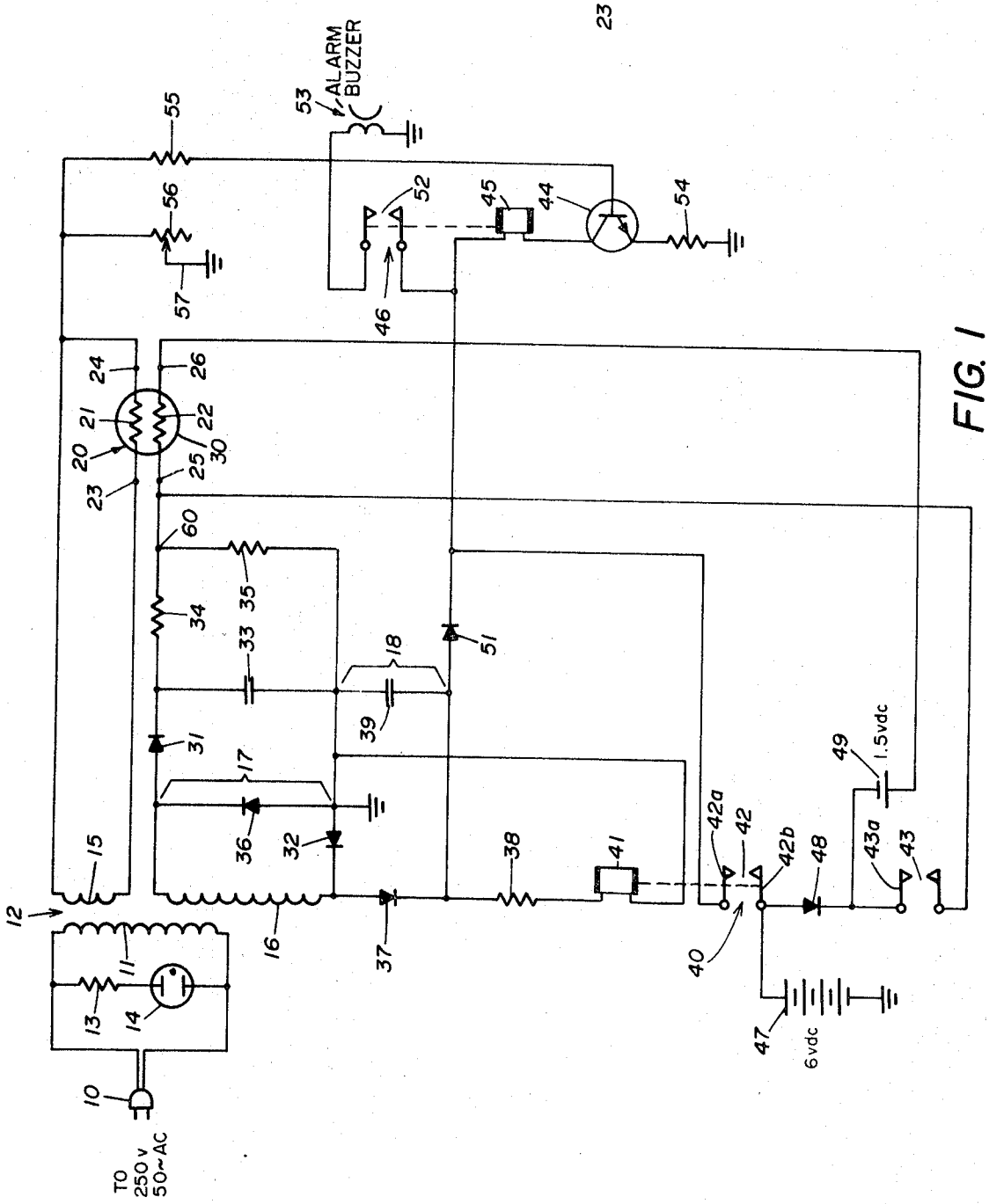

FIG. 1

SMOKE SENSING CIRCUIT WITH BATTERY STANDBY

BACKGROUND OF THE INVENTION

1. Field of the Invention

This invention relates to alarm systems and, more particularly, relates to fire and gas alarm systems.

2. History of the Prior Art

A wide variety of fire alarm systems have heretofore been devised. Certain of such prior systems have included devices for detecting the presence of smoke or gas in order to actuate alarms, such as a light or a noise source. However, many of the previously developed alarm systems have not provided a sufficiently economical and reliable alarm function. Moreover, previously developed fire and smoke alarm systems have not been completely satisfactory in that they rely exclusively on either commercial a.c. power or upon self-contained battery power. The a.c. powered devices are inoperative to detect a fire or gas alarm condition in the event of commercial power failure. The battery powered devices are inherently expensive and somewhat unreliable because the batteries must be replaced periodically to insure continuous operability. The present invention combines the desirable features of both a.c. and battery power by providing battery power utilized automatically only in the event of a power failure.

SUMMARY OF THE INVENTION

In accordance with the present invention, an alarm system is provided which eliminates or tends to reduce the problems and deficiencies of previously developed systems. The present alarm system requires a relatively simple d.c. power supply and a single gas or smoke detector. The detector of the present invention is small and inconspicuous and requires only low voltage so that special installation structure and techniques are not required.

In accordance with the present invention, an alarm system is provided with includes a detector operable to generate electrical signals in response to the presence of vaporous hydrocarbons. A low voltage power supply is connected to energize the detector, with an electronic switch operable in response to the electrical signals generated thereby. An alarm device is operable by the electronic switch to generate an alarm indication.

In accordance with a more specific aspect of the invention, a fire and gas alarm system includes a four-terminal sensing device adapted to be positioned in an environmental region to be monitored. The sensing device includes first and second resistance heating wires spaced apart by a conducting core and encompassed by an outer metallic shell. An a.c. source is rectified to supply a low voltage which is connected to heat the first resistance heating wire. The terminals of the second heating wire are connected for generation of electrical alarm signals upon the impingement of hydrocarbon vapors upon the outer metallic shell. A standby battery relay is operated from the a.c. power and provides current to the resistance heating wire in the event of power failure. An alarm structure is operable in response to the electrical alarm signals for generating alarm indications with or without a.c. power.

DESCRIPTION OF THE DRAWING

For a more complete understanding of the present invention and for further objects and advantages thereof, reference is now made to the following description taken in conjunction with the accompanying drawing, in which:

FIG. 1 is a schematic diagram of the preferred embodiment system; and

FIG. 2 is a somewhat diagrammatic illustration of a sensor constructed in accordance with the present invention.

DESCRIPTION OF THE PREFERRED EMBODIMENT

Referring to FIG. 1, a power plug **10** is adapted to be plugged into a 220 volt, 50 H_z a.c. power outlet. The present embodiment of the invention is especially intended for operation with the conventional commercial power most commonly found in European countries. The plug **10** is connected across the primary winding **11** of a power transformer **12**. A dropping resistor **13** and a neon indicator lamp **14** are connected in series across the primary transformer winding **11** to provide a visual indication of whether or not the a.c. power source is operating. The transformer **12** also includes first and second secondary winding **15** and **16**, respectively. The turns ratio of the primary winding **11** to the first secondary winding **15** is designed to produce an output on the order of 1 volt and deliver current on the order of 500 milliamperes. The winding **15** is connected across a first heating filament **21** of a smoke and hydrocarbon gas sensing unit **20** to be described in further detail below.

The second secondary winding **16** is connected in series with a pair of diodes **31** and **32** forming a first half-wave rectifier **17**. The output of the diodes **31** and **32** is connected across a capacitor **33** and a resistor **34** which together form a ripple filter for the rectifier. A dropping resistor **35** is connected across the output of the RC filter formed by capacitor **33** and resistor **34** and to one end of a second heating filament **22** of the sensing unit **20**.

A second pair of diodes **36** and **37** are also connected across the secondary winding **16** to form a second half-wave rectifier **18**. A capacitor **39** is connected across the two diodes **36** and **37** to form a ripple filter. The diode **37** is connected in series with a resistor **38** and the winding **41** of a standby power relay **40**. The standby relay **40** includes a first and second pair of contacts **42** and **43**, respectively, which are both open when the relay **40** is operated. One contact **42*a*** of the first set **42** is connected to the collector electrode of a transistor **44** through the winding **45** of an alarm relay **46**. The other contact **42*b*** of the set **42** is connected to the positive electrode of a 6-volt emergency battery **47** and through an isolation diode **48** to a contact **43*a*** of the other contact set **43**. The negative electrode of the battery **47** is grounded. The contact **43*a*** is also connected to the negative electrode of a 1.5 volt emergency battery **49**, the positive electrode of which is connected to one terminal of the second heating filament **22** of the sensing device **20**. The contact **43*b*** of the set **43** is connected to the other terminal of the filament **22**. A blocking diode **51** is connected between the second rectifier and the winding **45** of the relay **46** to isolate the standby d.c. power from the rectified a.c. power.

The alarm relay **46** includes one pair of normally open contacts **52** which are connected from the nega-

tive terminal of the blocking diode **51** to an alarm buzzer **53**.

The transistor **44** is connected in the grounded emitter configuration through a resistor **54**. The base electrode of the transistor **44** is connected through a base resistor **55** to one side of the secondary transformer winding **15**. A potentiometer **56** has one terminal connected to the secondary winding **15** with the wiper contact **57** grounded.

FIG. **2** illustrates the partial cutaway view of a typical sensor **20** showing four terminals **23 – 26** which extend from a ceramic base **27**. A 400-gauge mesh screen **28** provides a cylindrical container which is topped off by a steel cap **29**. The mesh screen **28** allows hydrocarbon vapors to penetrate within the sensor and impinge upon a sensing pod **30** which comprises an outer shell of Corundum, a natural aluminum oxide. Paladium heating elements are exposed within the Corundum outer shell and are spaced apart by an alpha alumina inner spacer core. Although the operation of the sensing pod is not absolutely understood, it is believed that the electrical heating wires heat the pod up such that the pod generates a predetermined electrical signal from the output terminal thereof. When hydrocarbons from smoke or gas strike the Corundum, the resistance between the two resistance heating wires decreases to cause the electrical output of the device to rise to indicate the presence of hydrocarbon vapors.

Referring again to FIG. **1**, when a.c. power is aplied to the terminals of the plug **10**, the diodes **31** and **36** together with the capacitor **33** and the resistor **34** produce a d.c. potential at point **60** on the order of a positive 6 volts. The output of the secondary winding **15** is connected across the terminals **23** and **24** of the sensor **20** to deliver a voltage on the order of 1 volt to the first heating filament **21**. When one of the filaments of a sensor **20** is heated, the resistance between the filaments **21** and **22** is fairly high, for example, on the order of several thousand ohms. The voltage at the base of the transistor **44** is normally maintained at a level below the turn-on potential due to the adjustment of the wiper arm **57** of the potentiometer **56** and the relatively high resistance between the filaments **21** and **22**, the latter being connected to the positive 6 volt potential at point **60**. While the transistor **44** is in a nonconductive state, the alarm relay **46** remains unoperated.

As long as the a.c. power source is operating, the second rectifier **18** comprising the diodes **36** and **37** together with the filter capacitor **39** produce d.c. current flow through the resistor **38** and the winding **41** of the standby relay **40** to hold the relay operated and the contact sets **42** and **43** open.

In the event the sensor **20** is subjected to smoke or hydrocarbon vapors, the resistance between the heated filament **21** and the other filament **22** falls to a much lower value, for example, less than 100 ohms. The positive voltage on the base of the transistor **44** rises to a value sufficient to initiate conduction through the collector-emitter path and operate the alarm relay **46** to close the contacts **52** and energize the alarm buzzer **53**. Once energized, the buzzer **53** will continue to operate and produce an alarm indication until the smoke or hydrocarbon vapor clears and the resistance between the filaments **21** and **22** rises to stop conduction in the transistor **44**.

In the event of an a.c. power failure, the second rectifier **18** comprised of the diodes **36** and **37** and the capacitor **38** ceases producing a d.c. output voltage to energize the winding **41** and the standby relay **40** releases to close the contact sets **42** and **43**. Closure of the contacts **42** connects the positive terminal of the 6 volt standby battery **47** to the collector electrode of the transistor **44** through the winding **45** of the alarm relay **46**. Closure of contacts **43** connects the 1.5 volt standby battery **49** across the other filament **22** of the sensor **20** to heat the filament so that the sensor **20** remains sensitive to detection of smoke or hydrocarbon vapors. The positive 6 volt potential of the standby battery **47** is also connected through the isolation diode **48** and the contacts **43** to produce a positive 6 volt potential at the point **60**.

Upon exposure of the sensor **20** to smoke or hydrocarbon vapors, the resistance between the two filaments **21** and **22** is reduced so that the transistor **44** is biased into conduction to operate the alarm relay **46** through its emitter-collector path and energize the alarm buzzer **53**.

When a.c. power is reestablished, current again flows through the second rectifier **18** formed by the diodes **36** and **37** to reenergize the coil **41** of the standby relay **40** and disconnect the emergency batteries **47** and **49** from the circuit. Current is drawn from the batteries **47** and **49** only during a period of a.c. power failure, thereby extending their useful lives.

From the foregoing, it will be understood that the present invention provides an alarm system which detects a fire or gas emergency. The present system is relatively simple in construction and maintenance-free. The gas sensing detector utilized is small and may be operated with only a low voltage requirement. The system of the present invention functions to automatically change from a.c. to standby battery upon the occurrence of a power failure and again returns to a.c. power upon reestablishment thereof. The circuit functions in generally the same manner whether being operated by a.c. power or standby batteries.

Having described the invention in connection with certain specific embodiments thereof, it is to be understood that further modifications may now suggest themselves to those skilled in the art and it is intended to cover such modifications as fall within the scope of the appended claims.

What is claimed is:

1. A fire and gas alarm system comprising:

a four-terminal sensing device adapted to be positioned in an environmental region to be monitored, said sensing device including first and second resistance heating wires spaced apart by a conducting core and encompassed by an outer metallic shell, the resistance between said wires being decreased when vaporous hydrocarbons or smoke are present in said environmental region;

a transformer having a primary winding adapted for connection to an a.c. voltage source, said transformer having first and second secondary windings, said first secondary winding being connected to a first of said resistance heating wires of said sensing device to provide current flow therethrough when a.c. power is supplied to said transformer;

a pair of rectifiers connected to the second of said transformer secondary windings, the output of the first rectifier being connected to the second of said resistance heating wires of said sensor to provide a bias voltage thereto;

a standby power relay, actuated by the output of the second rectifier of said pair and having normally open terminals connected to a source of battery power and to one of the resistance heating wires of said sensing unit;

an alarm relay having a set of normally open contacts;

a transistor connected in a common emitter configuration having its base electrode coupled to the first of said resistance heating wires and its collector electrode connected through the winding of said alarm relay to the output of said second rectifier;

an alarm buzzer connected to contacts of said alarm relay whereby the presence of smoke or gas within the region of said sensor decreases the resistance between the heating wires to produce a voltage at the base electrode of said transistor sufficient to bias said transistor into conduction and actuate said alarm relay to produce an alarm buzzer signal.

2. A fire and gas alarm system comprising:

a four-terminal sensing device adapted to be positioned in an environmental region to be monitored, said sensing device including first and second resistance heating wires spaced apart by a conducting core and encompassed by an outer metallic shell, the resistance between at least one of said wires being decreased when vaporous hydrocarbons or smoke are present in said environmental region;

a transformer having a primary winding adapted for connection to an a.c. voltage source, said transformer having first and second secondary windings, said first secondary winding being connected to a first of said resistance heating wires of said sensing device to provide current flow therethrough when a.c. power is supplied to said transformer;

a pair of rectifiers connected to the second of said transformer secondary windings, the output of the first rectifier being connected to the second of said resistance heating wires of said sensor to provide a bias voltage thereto;

a standby power relay, actuated by the output of the second rectifier of said pair and having normally open terminals connected to a source of battery power and to one of the resistance heating wires of said sensing device;

an alarm relay having a set of normally open contacts;

transistor switch means having an electrode coupled to the first of said resistance heating wires and a second electrode coupled through the winding of said alarm relay to the output of said second rectifier; and

an alarm connected to contacts of said alarm relay whereby the presence of smoke or gas within the region of said sensor decreases the resistance between the heating wires to produce a voltage at said transistor switch means sufficient to bias said transistor into conduction and actuate said alarm relay to produce an alarm signal.

3. A fire and gas alarm system comprising:

a four-terminal sensing device adapted to be positioned in an environmental region to be monitored, said sensing device including first and second resistance heating wires spaced apart by a conducting core and encompassed by an outer shell, the resistance between at least one of said wires being decreased when vaporous hydrocarbons or smoke are present in said environmental region;

a transformer having a primary winding adapted for connection to an a.c. voltage source, said transformer having first and second secondary windings, said secondary winding being connected to a first of said resistance heating wires of said sensing device to provide current flow therethrough when a.c. power is supplied to said transformer;

rectifier circuitry connected to the second of said transformer secondary windings and to the second of said resistance heating wires of said sensor to provide a bias voltage thereto;

a standby power relay connected to said rectifier circuitry and having normally open terminals connected to a source of battery power and to one of the resistance heating wires of said sensing device;

an alarm relay having a set of normally open contacts;

a transistor connected in a common emitter configuration having its base electrode coupled to the first of said resistance heating wires and its collector electrode connected through the winding of said alarm relay to the output of said rectifier circuitry; and

an alarm connected to contacts of said alarm relay whereby the presence of smoke or gas within the region of said sensor decreases the resistance between the heating wires to produce a voltage at the base electrode of said transistor sufficient to bias said transistor into conduction and actuate said alarm relay to produce an alarm signal.

* * * * *