United States Patent [19]

Johnson et al.

[11] **3,747,048**

[45] **July 17, 1973**

[54] **HIGH VOLTAGE CONNECTOR**

[75] Inventors: **Erlon Fitch Johnson**, Elizabethtown; **Kenneth Oscar Kopenhaver**, Hershey, both of Pa.

[73] Assignee: **AMP Incorporated**, Harrisburg, Pa.

[22] Filed: **Aug. 19, 1971**

[21] Appl. No.: **173,188**

[52] **U.S. Cl.** ..... **339/75 R**, 339/94 R

[51] **Int. Cl.** **H01r 13/52**, H01r 13/54

[58] **Field of Search** 339/60, 61, 93, 94, 339/75

[56] **References Cited**

UNITED STATES PATENTS

3,474,386	10/1969	Link	339/60 R
3,533,047	10/1970	McFarlane	339/94 C

FOREIGN PATENTS OR APPLICATIONS

172,661	9/1960	Sweden	339/94 R
1,092,090	11/1960	Germany	339/94 A

Primary Examiner—Joseph H. McGlynn

Attorney—William J. Keating et al., Gerald K. Kita, John A. Flanagan and Allan B. Osborne

[57] **ABSTRACT**

A high voltage high altitude electrical connector is provided which comprises a pair of insulating bushings with complementary and intermatable portions, one bushing constituting a receptacle and the other the mating plug therefor. The plug bushing has a central cavity with a tapered side wall and an electrically conductive contact pin mounted on its center axis. A sealing means is provided at an intermediate position in the cavity wall and surrounding one end of the contact pin. The receptacle bushing has a forward protrusion, the outside surface of which is tapered and shaped to be complementary to the plug cavity. A metal socket contact member which receives the contact pin therein is mounted centrally in the receptacle bushing. Suitable termination mmeans are provided at the opposite ends of the pin and the socket.

2 Claims, 3 Drawing Figures

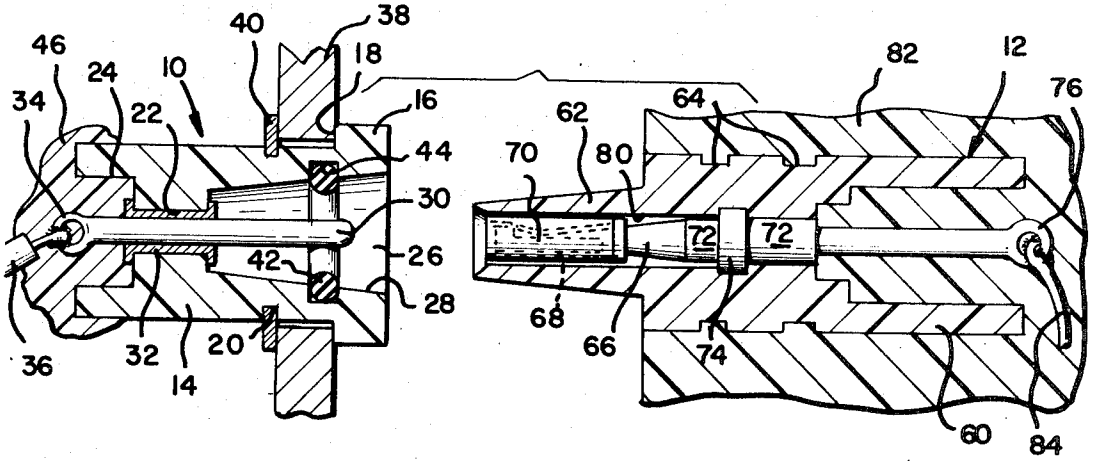

Fig. 1

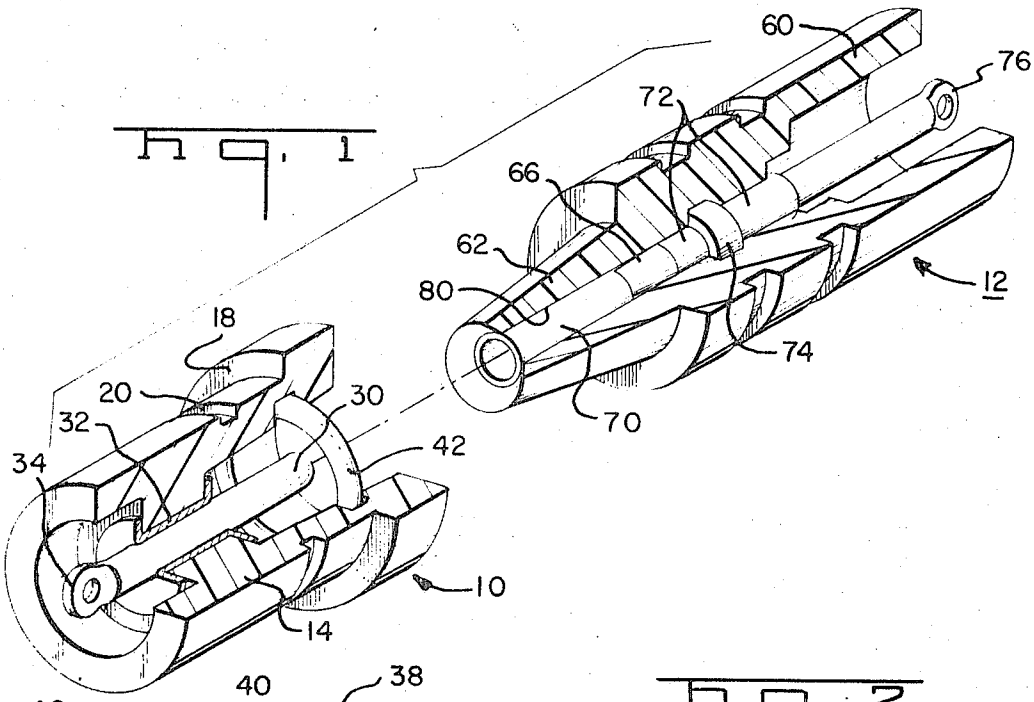

Fig. 2

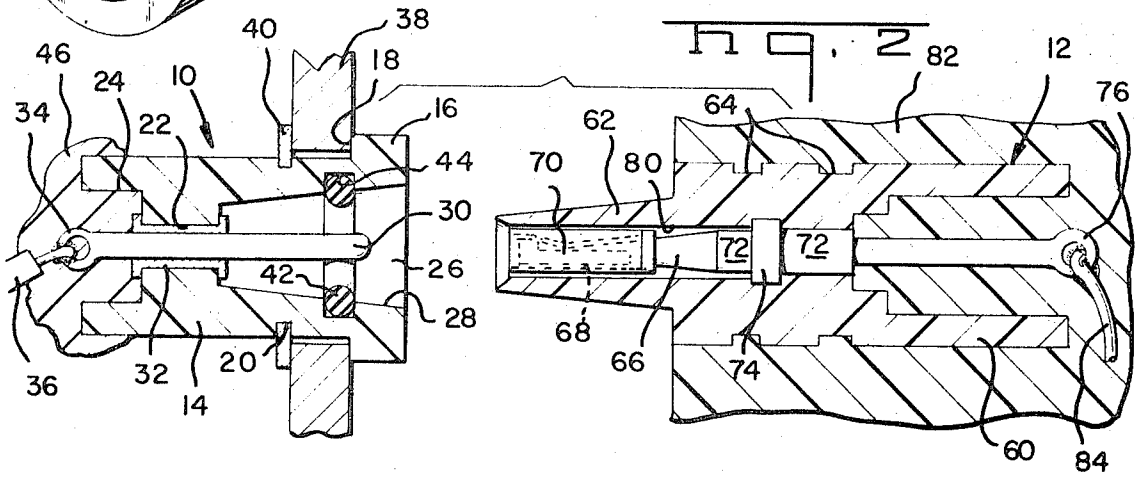

Fig. 3

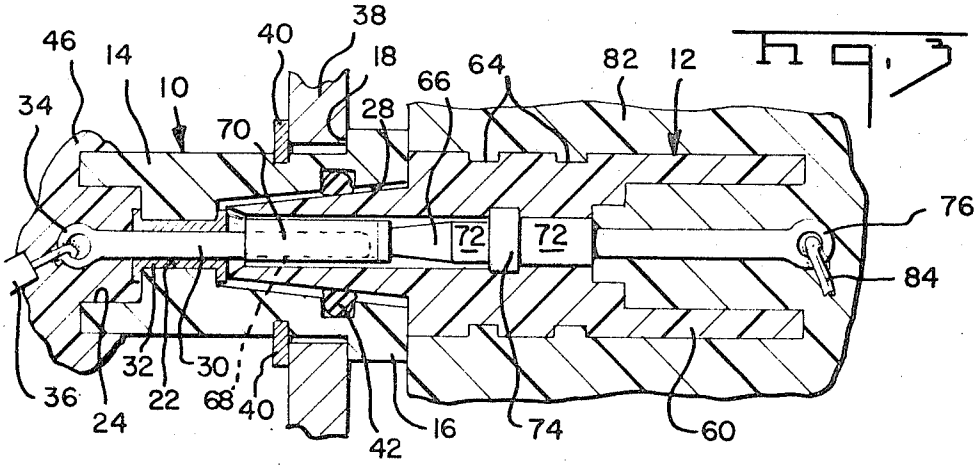

HIGH VOLTAGE CONNECTOR

BACKGROUND OF THE INVENTION

The present invention relates in general to electrical connectors, and more particularly to electrical connector assemblies which are arranged to withstand high voltages impressed thereon, even under reduced atmospheric pressure conditions such as occur at high altitudes.

Despite the existence of numerous prior art connector designs which have attempted to prevent corona and arcing when subjected to high voltages and high altitudes, the corona problem remains a serious one. Accordingly there is a long-felt need for a simple and effective, pluggable electrical connection for use in high voltage applications which will eliminate the corona problem, even under conditions of reduced atmospheric pressure.

SUMMARY OF THE INVENTION

As will be seen subsequently herein, the connector assembly of the invention fulfills the above described need with a receptacle and mating plug structure which employs pin and socket contacts and which is adaptable to a wide variety of uses. As one important aspect of the invention, the zone in which the interconnected pin and socket contacts are located is sealed off within the connector assembly, upon mating of the plug with the receptacle, in a manner which maintains atmospheric pressure in the contact zone and thereby eliminates the problem of corona and arcing.

The plug half of the connector comprises a bushing which contains a central cavity of a conical shape, i.e., with an inwardly tapering wall. A metal contact pin is mounted centrally of the busing to extend into the cavity, and a sealing means in the form of a partially recessed O-ring is located at an intermediate position in the cavity wall. The receptacle half is a cylindrical bushing formed with a forward protrusion having tapered walls complementary to the shape of the plug cavity. The receptacle includes a metal socket contact member disposed centrally of its bushing. The mouth of the pin-receiving bore in the socket member faces outwardly of the said forward protrusion of the bushing.

The connector assembly of the invention is arranged to serve as a rack and panel connector, as a simple free standing in-line splice, and in many other applications. In the rack and panel application, the provision of the tapered plug cavity means that exact alignment of the rack with the panel is no longer required. Also, the O-ring seal is so arranged that bottoming of the plug in the receptacle is unnecessary, thereby avoiding the need for a stop means to accurately control the closed position of the rack. When using the invention assembly as an in-line splice, the O-ring element, in addition to functioning as an environmental seal, provides a pop-on closure feature. That is, if frictionally holes both halves of the connector assembly together with adequate retention force, so that the need for separate locking means such as jack screws, clips, etc., is also eliminated.

Therefore an object of the present invention is to provide an improved electrical connector assembly which is pluggable and which is suitable for use with high voltages and under conditions of reduced atmospheric pressure.

Another object is to provide such an assembly which includes intermatable bushings employing pin and socket contact members, said assembly having an improved environmental sealing means which also provides a closure retention feature, avoiding the need for separate locking means.

A further object is to provide a pluggable electrical connector assembly which may serve as a fluid-tight lead-in to sealed electrical units requiring high voltage and employed in high altitude aircraft, guided missiles, and the like.

Another object is to provide an electrical connector assembly of high quality and effectiveness which still is of simple construction and is inexpensive to manufacture.

Another object of the invention is to provide a pluggable electrical connector assembly, one with intermatable bushings as aforesaid, which further contains an improved sealing means adapted to maintain atmospheric pressure in the zone of the mated pin and socket contacts, thereby eliminating the problem of corona and arcing under high voltage.

An additional object is to provide a pluggable electrical connector assembly of the type mentioned having self-aligning properties in rack and panel applications.

Another object is to provide such a connector assembly which is reliable in operation for high voltage connections over a wide temperature range and despite conditions of low ambient pressure and high relative humidity.

Other objects and attainments of the present invention will become apparent to those skilled in the art upon a reading of the following detailed description when taken in conjunction with the drawings in which there is shown and described an illustrative embodiment of the invention; it is to be understood, however, that this embodiment is not intended to be exhaustive nor limiting of the invention but is given for purpose of illustration in order that others skilled in the art may fully understand the invention and the principles thereof and the manner of applying it in practical use so that they may modify it in various forms, each as may be best suited to the conditions of a particular use.

BRIEF DESCRIPTION OF THE DRAWING

FIG. **1** is an exploded view, in perspective, of two halves of the connector assembly of the invention;

FIG. **2** is a longitudinal sectional view of the connector assembly with the two bushings disengaged; and

FIG. **3** is a longitudinal sectional view similar to FIG. **2** but after closure of the two halves to complete the connection.

DESCRIPTION OF THE PREFERRED EMBODIMENT

Referring to the drawing, the numeral **10** designates the plug half of the connector and numeral **12** designates the intermating receptacle half. The described embodiment is shown as a typical rack and panel application, although it is understood that the connector may also serve as an in-line splice, or in any other desired fashion.

Referring first to the plug **10**, it comprises a generally cylindrical bushing **14** of insulating material enlarged at one end by a flange **16** extending outward to form a shoulder **18**. A groove **20** is spaced a predetermined distance from shoulder **18** for a purpose to be de-

scribed. Centrally of the bushing **14** there is an axial bore **22** communicating at the rear end of the bushing with a counterbored opening **24** of larger diameter. Forward of the central bore portion **22** is located a conically shaped cavity or chamber **26** formed with an inwardly tapering side wall **28.** A metal contact pin **30** is mounted on the center axis of bushing **14** to extend well forward in chamber **26** at the zone of contact with the associated socket member, to be described, in the other half **12** of the connector assembly. The contact pin **30** is held in position in bushing **14** by a tubular metal mounting element **32** having upturned end flanges engaging the bottom walls of cavity **26** and counterbore **24.** The contact pin **30** has a wire termination means at the rear end thereof, shown as a pre-tinned eyelet **34** to which an insulated lead-in wire **36** may be soldered. Of course, if desired, pin **30** could have a wire barrel at the rear with which to make a crimped wire connection.

The pin **30** is soldered within mounting element **32,** the element **32** being initially rivet-shaped without the rear end flange. The assembled pin **30** and element **32** can be inserted into place through cavity **26,** after which the rear end flange shown in FIG. **2** is formed by bending of the end of element **32.** This will lock the assembly **30–32** in place.

The plug **10** is mounted in an aperture in a bulkhead **38** with shoulder **18** abutting the bulkhead surface. A removable metal retaining ring **40** fitted into groove **20** rigidly holds the plug in the bulkhead aperture, the connecting circuit wire **36** being soldered to eyelet **34.**

The chamber **26** contains an improved contact sealing means which comprises an O-ring **42** of silicone rubber of any equivalent elastomer. The O-ring **42** is partially recessed within the side wall **28,** intermediate the ends of chamber **26.** This is accomplished by providing a groove **44** in the wall **28,** as shown in FIG. **2,** at a point to surround the outer end of contact pin **30.** The rubber sealing ring **42** is a course fitted within this groove **44.**

The insulated bushing **14** is composed of any suitable dielectric material with adequate mechanical properties to be machinable. If a thermoset material is preferred for a machined bushing, a glass epoxy such as G10 or Epial is used. If the bushing **14** is to be formed by injection molding, then a thermoplastic material such as a Phenolic should be employed. In this case, mounting element **32** could be dispensed with, the pin **30** being held in the mold and the bushing contacting the pin directly in the region of passage **22.**

A plotting compound **45** can be inserted into opening **24** to fill it and extend out over the eyelet **34** and the stripped end of wire **36** to seal the rear end of the plug.

The other half of the connector assembly, the receptacle **12,** is formed in the following manner. The receptacle includes a bushing **60** in the form of a cylindrical body having a forward protrusion or extension **62.** This extension **62** is of a tapered, conical shape dimensioned to be complementary to cavity **26** and to fit relatively snugly therein when the connector is plugged together as shown by FIG. **3.** The body **60** contains a pair of external grooves **64.** The socket contact member **66** of electrically conductive metal is disposed along the longitudinal center axis of the bushing **60.** The socket contact includes a forward pin-receiving bore **68,** internal of which is mounted a cantilever-beam contact spring **70,** as well as a center portion **72** with a retaining shoulder **74** and a rear wire receiving portion with a solder eyelet **76** (similar to eyelet **34**). The bushing **60** must be provided with a central opening **80** to receive socket member **66** with the mouth of bore **68** facing outwardly of **62,** the pin-receiving section of the socket member **66** being located in the protrusion **62.** The opening **80** may have one or more enlarged diameter sections toward the rear as shown in FIGS. **2** and **3.** The bushing **60** is preferably formed by injection molding of a Phenolic material, with the socket member **66** held in the mold and thus located in the bushing as shown by being molded in place. Shoulder **74** will lock the socket **66** in place. In the rack and panel embodiment shown, the bushing **60** is part of an encapsulated circuit package indicated at **82.** A circuit wire **84** leads to electrical and electronic components potted within this circuit package, and is soldered to eyelet **76.** The encapsulant will extend into the rear enlargements of opening **80** to seal the rear of the receptacle bushing.

In operation, a circuit package as described having the receptacle **80** integral therewith can be plugged into the bulkhead or panel **38.** The connector assembly described and shown will effect an electrical interconnection of wires **36** and **84,** to circuits not shown. This is achieved by protrusion **62** fitting into cavity **26** to bring contact pin **30** within bore **68** where it will engage the internal contact spring **70** of the socket member.

During the movement of closure of the two connector halves **10** and **12,** the outer surface of the receptacle protrusion **62** will engage the O-ring **42** and compress it within its groove as seen in FIG. **3.** This action, due to the taper of **62** and of **28,** will compress the gas (air, for instance) behind the O-ring in the plug **10** and trap it in place within cavity **26** in the zone where the mated contacts **30, 66** are located. The result is a tight environmental seal, and further, one which holds atmospheric pressure at the region or zone of contact so that corona and arcing due to reduced pressure cannot occur. The connection is also sealed with respect to contaminants such as dirt, moisture, and the like. Finally, the O-ring **42** provides a frictional locking function to hold the connector halves together once the receptacle is forced into the plug cavity. The connector mates with a "pop-on" action, and the frictional engagement with the rubber sealing ring creates a retention force so that separate locking means become unnecessary. With this seal, also, bottoming of the plug and receptacle is not necessary, eliminating the need for a separate stop means to accurately control the closed position of the rack.

Whereas the plug is shown mounted in the panel or bulkhead **38,** the relative positions of plug and receptacle may easily be reversed. This a reason for the grooves **64,** so that a pair of retaining rings such as the ring **40,** can be fitted therein on each side of the panel holding the receptacle in place. The grooves **64** also better hold the receptacle in the encapsulant **82,** in the version shown in FIG. **3.**

It will, therefore, be appreciated that the aforementioned and other desirable objects have been achieved; however, it should be emphasized that the particular embodiment of the invention, which is shown and described herein, is intended as merely illustrative and not as restrictive of the invention.

We claim:

1. An electrical connector assembly suitable for use with high voltages at high altitudes, said connector as-

sembly comprising a plug member of insulating material and an interconnectable mating receptacle member also of insulating material, said receptacle member containing therein a socket contact member of electrically conductive material and said plug member containing therein an electrical contact pin adapted to mate with said socket contact member, said plug member having a central axial opening to receive said contact pin, said plug member further having a forward central cavity communicating with said opening, said cavity being of conical shape with an inwardly tapering wall, said contact pin having a forward portion engageable with said socket member that extends forward into said cavity, said receptacle member having a cylindrical body with a forward extension of conical shape adapted to fit within said plug cavity when the plug and receptacle members are interconnected, the outer surface of said forward extension then being spaced slightly from said substantially parallel to the side wall of said cavity, and a combined sealing and frictional locking means mounted in the side wall of said cavity in position to surround said contact pin rearwardly of its free end, and seal a predetermined volume of gas within said connector assembly while frictionally holding said receptacle in engagement with said plug member, the contact pin and socket contact member both terminating within their respective plug and receptacle members.

2. The electrical bushing of claim **1** wherein said sealing means comprises an O-ring of an elastomeric material, said cavity side wall having an annular groove therein intermediate the ends of the cavity, the said O-ring being disposed in said groove to be partially recessed within said cavity side walls.

* * * * *