United States Patent [19]

Shaw

[11] **3,744,867**

[45] **July 10, 1973**

[54] **PROGRAMMED DISPENSER**

[76] Inventor: **Joseph D. Shaw,** 508 Church St., Brownsville, Pa. 15417

[22] Filed: **Apr. 3, 1972**

[21] Appl. No.: **240,869**

Related U.S. Application Data

[63] Continuation of Ser. No. 99,165, Dec. 17, 1970, abandoned.

[52] **U.S. Cl.** **312/234,** 312/35, 116/121

[51] **Int. Cl.** **A47b 67/02**

[58] **Field of Search** 221/4, 13, 69, 87, 221/89; 312/209, 234, 35, 234.2, 234.5; 116/121

[56] **References Cited**

UNITED STATES PATENTS

3,537,422 11/1970 Moe 116/121

3,618,559 11/1971 Moe 116/121

Primary Examiner—Stanley H. Tollberg

Attorney—Walter S. Murray

[57] **ABSTRACT**

A programmed dispenser particularly useful for the dispensation of prescribed pharmaceuticals to hospital patients and having a cabinet containing individually coded drawers for the pharmaceuticals and an indexed selector means adapted to periodically receive the cabinet to thereby open certain drawers into a dispensing position.

7 Claims, 7 Drawing Figures

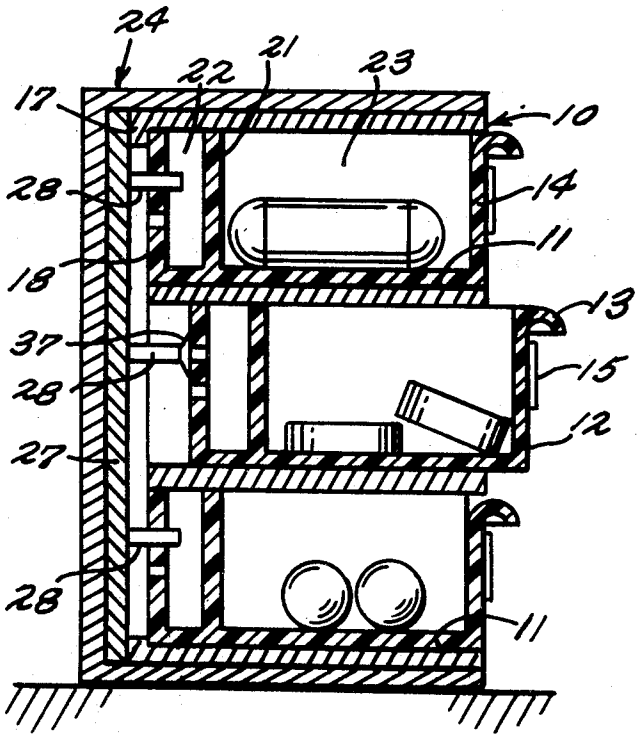

Fig. 1

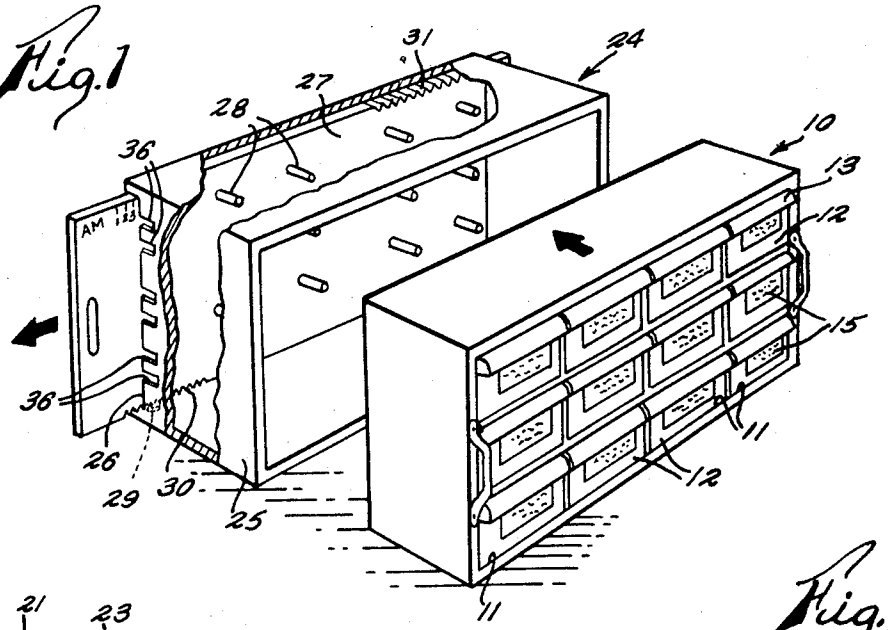

Fig. 2

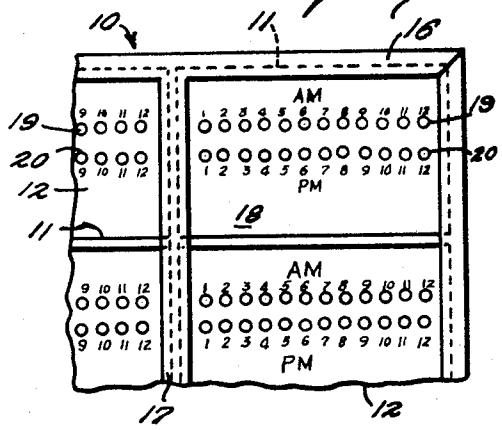

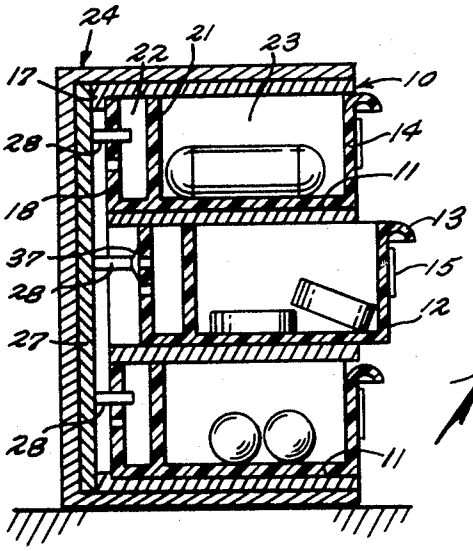

Fig. 3

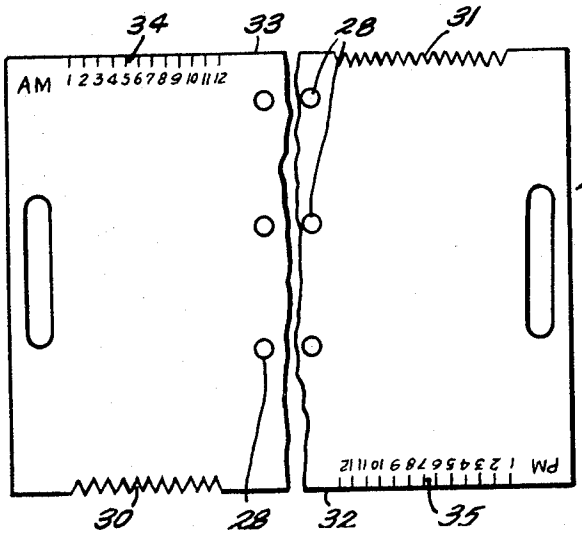

Fig. 4

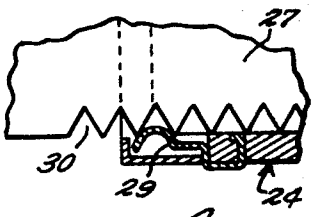

Fig. 5

INVENTOR
Joseph D. Shaw
BY Thomas S. Murray
ATTY.

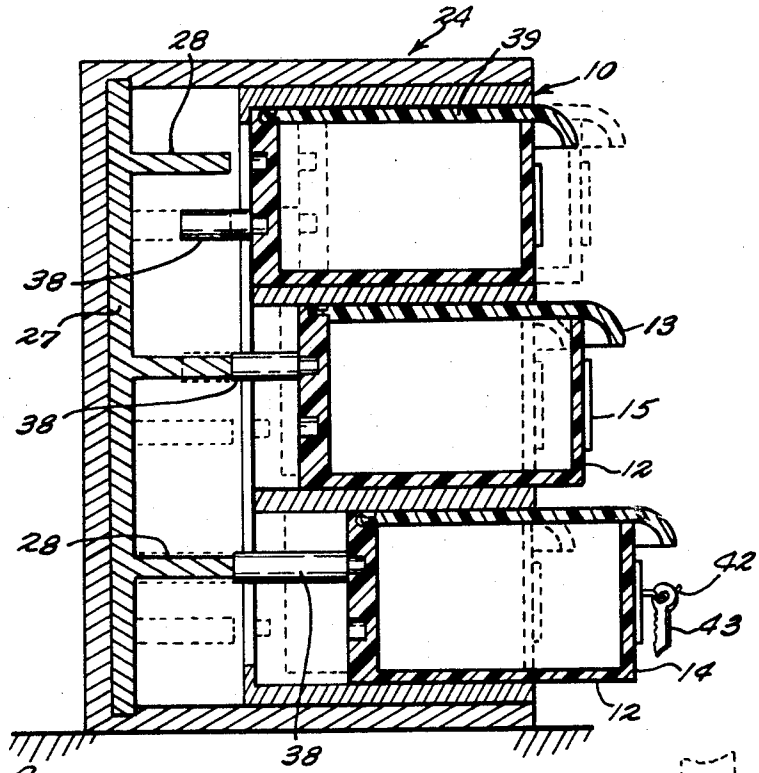

Fig. 6

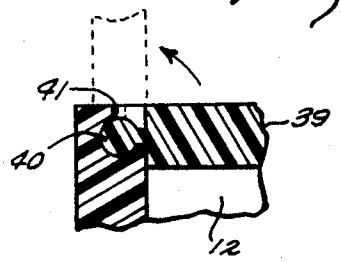

Fig. 7

INVENTOR

Joseph D. Shaw

BY Walter J. Murray
ATTY.

PROGRAMMED DISPENSER

This is a continuation of application Ser. No. 99,165 filed Dec. 17, 1970 now abandoned.

The present invention relates to a programmed dispenser and particularly to a time coded cabinet device for dispensing medication which is best suited for use in hospitals whose personnel dispense large quantities of different medication to many different patients at irregular time intervals during a day or throughout a series of days.

It is the primary object of the invention to provide a prescribed medicinal dispenser that is portable between a hospital pharmacy and the ward nursing station therefor and which will serve as a positive medication dispensing reminder of the administration time and the prescribed dosage of medication for each of a plurality of patients being cared for in that particular hospital ward.

Another object of the invention is to provide a portable medicine cabinet with sliding drawers containing pharmaceuticals which will positively control the dispensation of said medicinals to the proper patients by means which when periodically operated will indicate to the hospital attendant at the proper time the pharmaceuticals to be disbursed to particular patients.

A further object of the invention is to provide in a multidrawer cabinet a time coding means for each drawer in combination with a decoding case which cooperates with the cabinet to present at a particular time all the individual pharmaceutical containing drawers to be dispensed at that time.

With the foregoing and other objects in view, my invention consists in the construction, arrangement, and combination of elements as hereinafter set forth, pointed out in my claims, and illustrated in the accompanying drawings, in which:

FIG. **1** is a perspective view of the programmed dispensing device of this invention with its cooperating parts in non-dispensing positions, certain wall portions being broken away and shown in section.

FIG. **2** is a fragmental, rear elevational view of the cabinet part of the device with the coded drawers held therein.

FIG. **3** is an enlarged section taken laterally through the device with its parts in decoded dispensing positions.

FIG. **4** is a fragmental, elevational view of the selector board for the device shown in FIGS. **1–3** of the drawings.

FIG. **5** is a greatly enlarged section showing a detail of my device.

FIG. **6** is an enlarged section like FIG. **3** showing a modification of my dispensing device.

FIG. **7** is a greatly enlarged section showing a detail of the drawer structure for the device shown in FIG. **6**.

Many pharmaceuticals are prescribed for each of a number of hospital patients in a ward for periodic dispensation in uniform amounts and this presents a distribution control problem to both the pharmacist and to the attendants at the ward's nursing station. In the embodiment of the invention shown in FIGS. **1–5** of the drawings, my programmed dispenser is represented as a conventional, rectangular cabinet **10** preferably small enough to be readily portable by hand and having a number of compartments **11** arranged in both horizontal and vertical rows within the cabinet. Each compartment is adapted to slidably receive a drawer **12** having

the usual hand pull **13** and a front wall **14** carrying an index frame **15**. The frame is adapted to removably hold an identification card displaying, for example, the name of a patient, his or her hospital room number, the identification of the drug contained in the drawer and other data relating to the administration of and the recipient of the particular pharmaceutical. As best shown in FIG. **2** the rear of the cabinet is open, except for a marginal flange **16**, and interconnected vertical flanges **17** which form rear stops for the drawers **12** in the cabinet.

Each drawer has a lateral wall such as a back wall **18** having two lateral rows of holes **19** and **20** formed therethrough, the holes in each row being preferably equally spaced apart and preferably numbering twelve (**12**) holes to the row. Indicia are marked on the back of each drawer (FIG. **2**) to identify one row **19** of holes as pertaining to the AM hours of the day while the other row **20** has indicia thereon identifying it with the PM hours of a day. It will also be noted that the horizontal row of AM holes **19** are closer to the top of the drawer back than are the PM row **20** of holes with respect to the bottom of the drawer, for the purpose to be described hereinafter.

With reference to FIG. **3** of the drawings, it should be noted that each drawer has a lateral divider **21** near the rear wall **18** to provide a clearance space **22** and a pharmaceutical containing space **23** for the drawer.

The cabinet **10** with all its drawers **12** in their closed positions shown in FIG. **1** is adapted to be entered into a decoding case **24**, said case having internal dimensions adapted to snugly and slidably receive the external dimensions of the cabinet. A side wall **25** of the case **24** has a vertical slot **26** formed in its rear portion for the reception of a laterally slidable, selector board **27**. As best shown in FIGS. **1** and **4** the board **27** has a number of pins **28** projecting at right angles from one major face thereof, said pins being arranged in horizontal and vertical rows corresponding to similar rows of drawers held in the cabinet with preferably one pin assigned to each drawer. The selector board **27** is adapted for controlled, intermittent lateral movement across the inside rear portion of the case by an indexing means shown in FIG. **5** as a spring detent **29** mounted in the corner of the case adjacent the bottom end of the slot **26**. The spring detent alternately cooperates with a row of twelve (**12**) teeth **30** or **31** each formed in a longitudinal edge **32** and **33**, respectively, of the board adjacent diagonally opposed corners therein. The teeth in each row are spaced apart in regular increments corresponding to the spaces between the holes in the rows **19** and **20** through the back walls of the drawers so that when the board is moved laterally one tooth, the pins **28** in the board will be advanced one hole in the rows in their respective drawers.

As best shown in FIG. **4** of the drawings, the edge **33** of the board **27** opposed to the teeth **30** is provided with 12 calibrations **34** corresponding to the AM hours of the day while the longitudinal edge **32** of the board opposed to the teeth **31** is provided with calibrations **35** corresponding to the PM hours of a day.

The board is adapted to be turned longitudinal edge-for-longitudinal edge for alternate entry into the slot **26** and to this end a pair of entrance slots **36** (FIG. **1**) is provided for each horizontal row of pins **28** as each row will be entered at different levels when the board is turned edge-for-edge within the casing.

As best shown in FIG. 3 a particular drawer is time coded by means of a plug **37** removably mounted in a particular hole or holes in the AM and/or PM rows **19** or **20**, respectively, of the drawer.

In operation an identification card is made out for each patient in a particular room of a ward served by a nursing station, including the pharmaceutical and the time or times of administering it. A pharmacist places the identification card in the index frame **15** of each drawer and then places the prescribed number of a given pharmaceutical in the drawer and codes the particular drawer for the time or times of administering said pharmaceutical by inserting plugs in the coding rows **19** and **20** of the drawer at the proper indicated places. A cabinet thus prepared with a plurality of drawers therein is taken to the nursing station and an attendant at the station will then operate the selector board **27** at each hour of the day by referring the AM or PM calibrations with the edge of the slot **26**, the detent means positively locating the board at the proper lateral space for the pins to enter corresponding holes in the drawers. The cabinet is then slid into the case **24** and if a particular pharmaceutical is to be administered to a particular patient at the coded time a pin **28** will contact a plug **37** and push the drawer forwardly to an open position on the cabinet thereby visibly indicating to the attendant that the drug in that opened drawer is to be administered to the named patient from that drawer. In the event a drug is not to be administered at that selected hour the pin will merely enter an unplugged hole in the drawer and the said drawer will remain unmoved and closed in the cabinet.

With reference to FIGS. **6** and **7** of the drawings, a modification of my device is illustrated wherein the selector device comprises a pin **38** insertable into one of the lateral rows of holes formed in the back walls of the drawers that are identical to the rows of holes **19** and **20** in the drawers of the preferred device. These pins when contacted by a pin **28** on the selector board **27** will push the drawer **12** forwardly to an opened position indicating that pharmaceuticals therein are to be dispensed at the particular hour at which the board is manually set. It will be noted that the pin **38** in the lowermost drawer **12** is longer than the pins shown in the two uppermost drawers which adapts it to move the drawer farther out of the cabinet to thereby indicate to the attendant that a different pharmaceutical dosage, or the like, is to be administered from that drawer at that time. It will be noted that the drawers **12** shown in FIG. **6** have hinged covers **39** and that the drawer pulls **13** are formed on the forward ends of said covers. The preferred hinge for the covers **39** is shown best in FIG. **7** wherein a cylindrical ball portion **40** formed on the cover is receivable in a socket **41** formed in the drawer back wall.

The AM position of the decoding board **27** is illustrated in full lines in FIG. **6** while the dotted lines shown the inverted PM positions of the decoding board and drawers from the same decoding position of the selector board in the case **24**.

Although my programmed dispenser has been shown and described herein as it pertains to the administration of pharmaceuticals in hospitals it is contemplated that the dispenser could be used to program the performance of surgical operations with the proper instruments contained in the coded drawers or the dispenser could be useful in certain manufacturing processes requiring operational increments and the dispensation of large quantities of different items to different stations, or the like. In some instances the prescribed medication is kept in a locked separate cabinet and in such cases the front wall **14** of a programmed drawer **12** (FIG. **6**) could be provided with a hook **42** to removably hold a key **43** that will unlock the separate cabinet for access to the prescribed medication.

Having thus described my invention, what I claim as new is:

1. In combination with a generally rectangular cabinet having a number of compartments therein for slidably receiving a plurality of drawers which includes:

a. a back wall for each drawer having a lateral row of spaced apart coding means formed thereon,

b. a decoding case having an open front and adapted to slidably receive the cabinet therethrough,

c. a selector mounted for intermittent lateral movement in the rear of the case,

d. a plurality of cooperative coding means on one major face of the selector and each said means positioned for association with a row of coding means on a drawer,

e. indexing means between the case and the selector controlling the lateral advancement of the selector in the case,

f. and means removably mounted in predetermined positions along the coding means on each drawer and associated with the cooperative coding means on the selector to slide the associated drawer out of the cabinet into an opened dispensing position when the cabinet is slid into the case.

2. In a dispensing apparatus as set forth in claim **1** wherein the spaced apart coding means is a row of spaced apart holes formed in said back wall of each drawer and the cooperative coding means are pins mounted on the selector and each adapted to normally pass through the holes in a drawer.

3. In a dispensing apparatus as set forth in claim **2** wherein the means removably mounted in the coding means on a drawer is a removable plug.

4. In dispensing apparatus as set forth in claim **2** wherein the means removably mounted in the coding means on a drawer is a removable pin.

5. In a dispensing apparatus as set forth in claim **2** wherein the spaced apart coding means on each drawer is a plurality of longitudinally spaced, lateral rows, each row being spaced at different distances from a lateral edge of the back wall of each drawer, and the selector is mounted for alternating the cooperative coding means thereon with the rows of coding means on each drawer.

6. In a dispensing apparatus:

a. a cabinet containing a number of compartments,

b. a plurality of dispensing units each slidably disposed in a compartment,

c. a lateral wall for each unit having a lateral row of spaced apart coding means formed thereon,

d. a decoding case adapted to slidably receive the cabinet,

e. a selector mounted for intermittent lateral movement in the case,

f. a plurality of cooperative coding means on a major face of the selector facing the cabinet and each said means positioned for association with a row of coding means on the lateral wall of a unit, and

g. means removably mounted in predetermined positions along the coding means on each lateral wall and associated with a cooperative coding means on the selector to move selected units from the compartments when the cabinet is slid into the case.

7. The dispensing apparatus set forth in claim 6 wherein the coding means on the selector are pins extending uniform distances from the major face of said selector, and the means removably mounted in predetermined positions along the coding means on each lateral wall of each unit are plugs having different lengths.

* * * * *

PO-1050
(5/69)

UNITED STATES PATENT OFFICE
CERTIFICATE OF CORRECTION

Patent No. 3,744,867 Dated August 9, 1973

Inventor(s) Joseph D. Shaw

It is certified that error appears in the above-identified patent and that said Letters Patent are hereby corrected as shown below:

Column 1, line 67 before "drawer" insert -- unit in the form of a --
Column 2, line 37 before "pins" insert --decoding---
Column 3, lines 34and 35 cancel "selector" and insert --coding--
Column 3, line 38 after "pins" insert --38--
Column 3, line 39 before "pin" insert -- decoding--
Column 4, lines 20, 29, 36, 50 and 63 cancel "coding" and insert -- decoding--
Column 5, line 3 cancel "coding" and insert -- decoding--
Column 6, line 1 cancel "coding" and insert -- decoding--
Column 6, line 5 cancel "plugs" and insert -- pins--

Signed and sealed this 20th day of November 1973.

(SEAL)
Attest:

EDWARD M.FLETCHER,JR.
Attesting Officer

RENE D. TEGTMEYER
Acting Commissioner of Patents