United States Patent [19]

Yarbrough

[11] **3,738,070**

[45] **June 12, 1973**

[54] **BURIAL VAULT**

[76] Inventor: **Glen A. Yarbrough,** P.O. Box 126, Clarksville, Ark. 72830

[22] Filed: **Mar. 12, 1971**

[21] Appl. No.: **123,647**

[52] **U.S. Cl.** **52/130,** 52/140, 52/169

[51] **Int. Cl.** **E04h 13/00,** E04c 1/00

[58] **Field of Search** ..... 52/128–142, 166, 630, 249; 220/1 B, 5 A, 18, 72

[56] **References Cited**

UNITED STATES PATENTS

418,626	12/1889	Sagendorph	220/72
900,166	10/1908	Harry	220/72
1,132,088	3/1915	Halladay et al.	52/129
1,411,331	4/1922	Elmore	52/141
1,785,156	12/1930	Temple	52/140
2,806,278	9/1957	Crump	52/142
2,987,213	6/1961	Sexton	220/18
3,283,386	11/1966	Cenegy	52/140
1,167,291	1/1916	Graham	52/134
723,638	3/1903	Blair	52/166

FOREIGN PATENTS OR APPLICATIONS

181,825	6/1922	Great Britain	220/18
634,531	7/1963	Belgium	220/72
41,303	7/1968	Finland	220/72

Primary Examiner—Frank L. Abbott
Assistant Examiner—James L. Ridgill, Jr.
Attorney—A. Yates Dowell and A. Yates Dowell, Jr.

[57] **ABSTRACT**

A burial vault apparatus for the interment of bodies either partially or entirely below ground level. The vault is constructed of corrugated lightweight material which is airtight and moisture-proof and from which air may be evacuated, and such vault is provided with structure to resist vertical movement.

4 Claims, 6 Drawing Figures

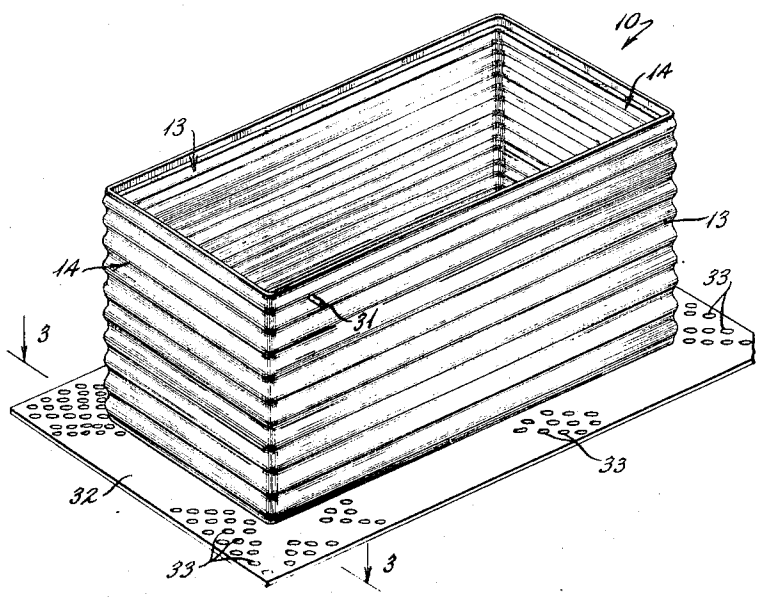

Fig. 1

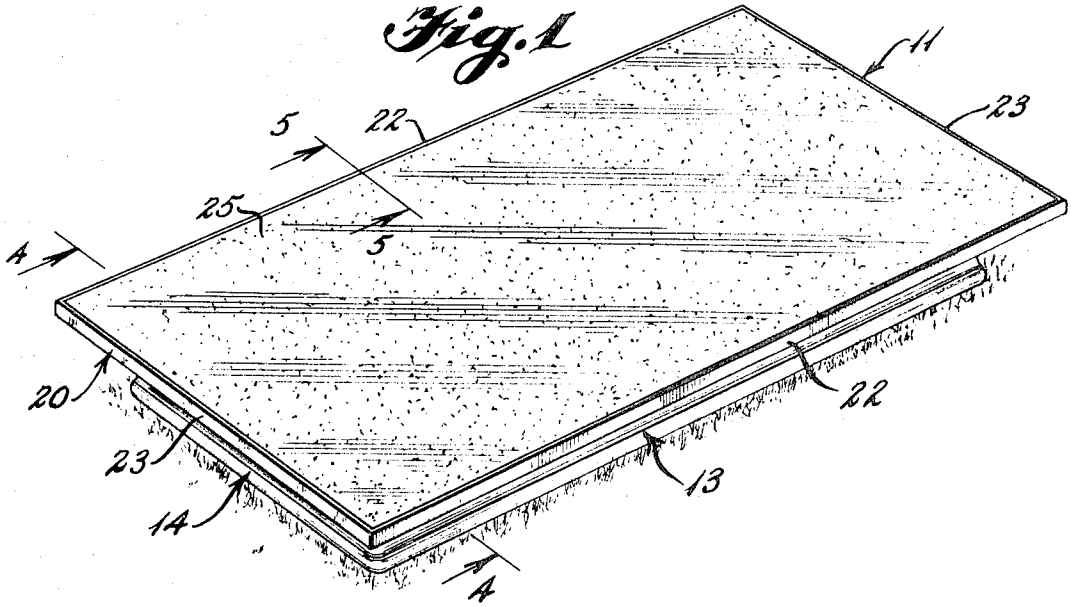

Fig. 2

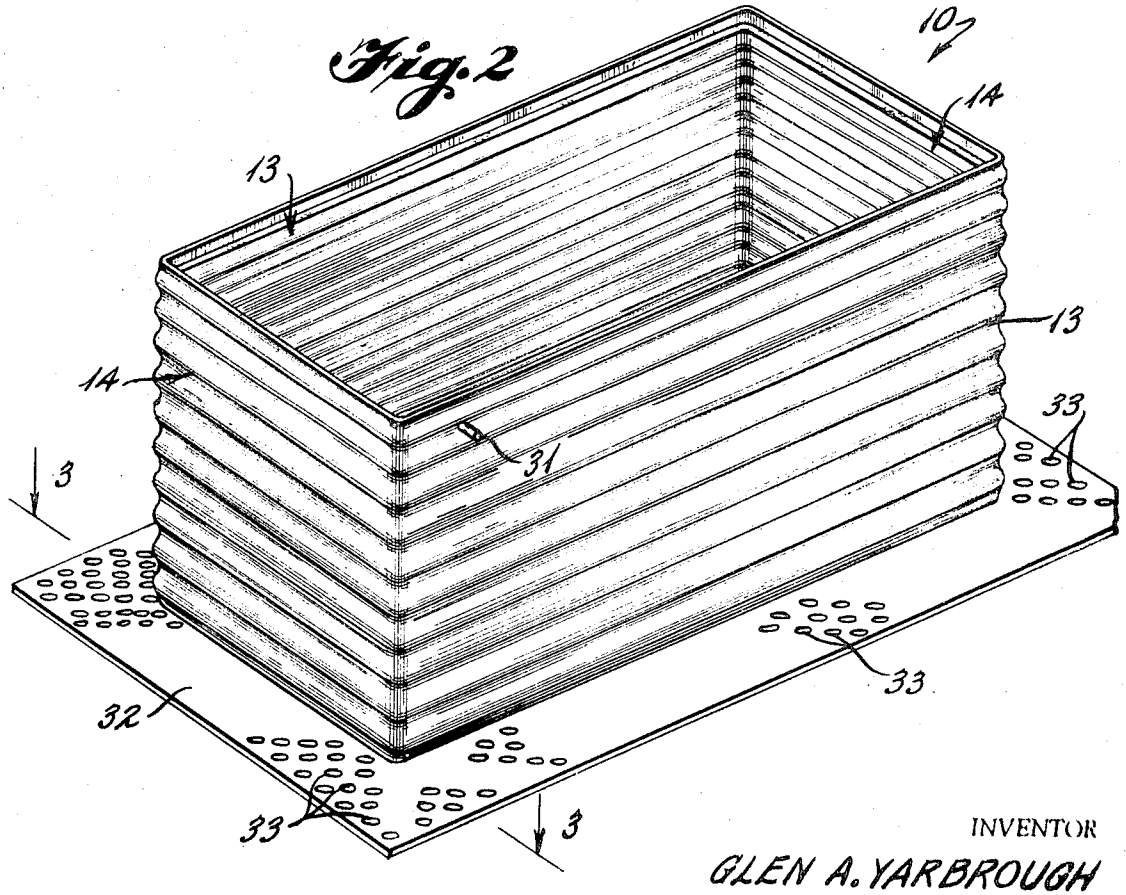

INVENTOR
GLEN A. YARBROUGH

BY
ATTORNEYS

Fig. 3

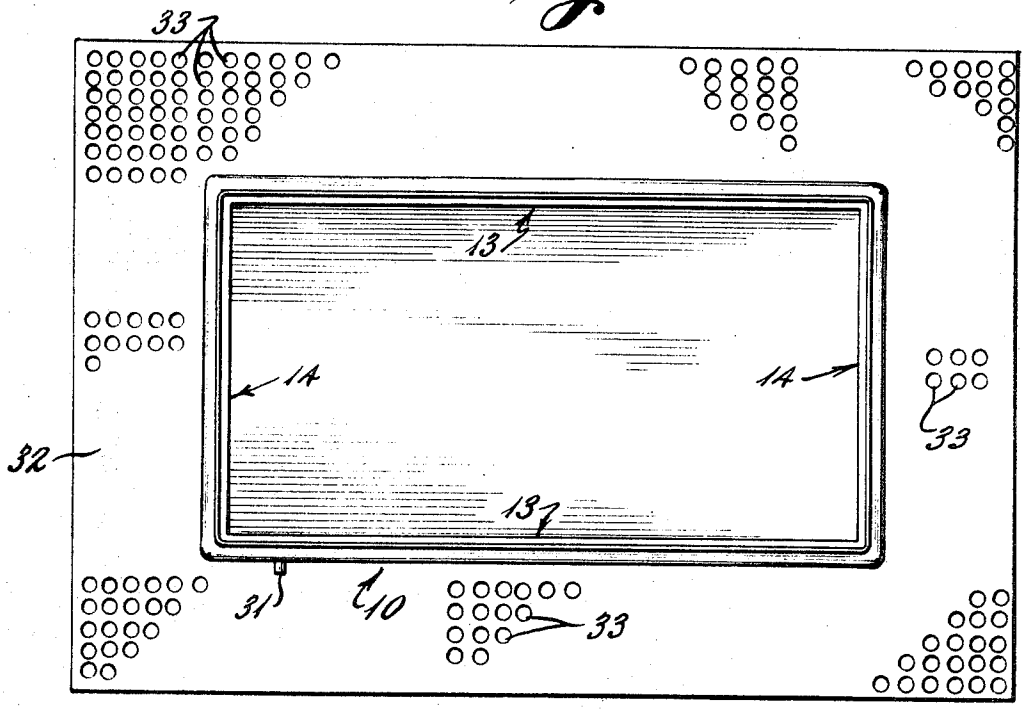

Fig. 4

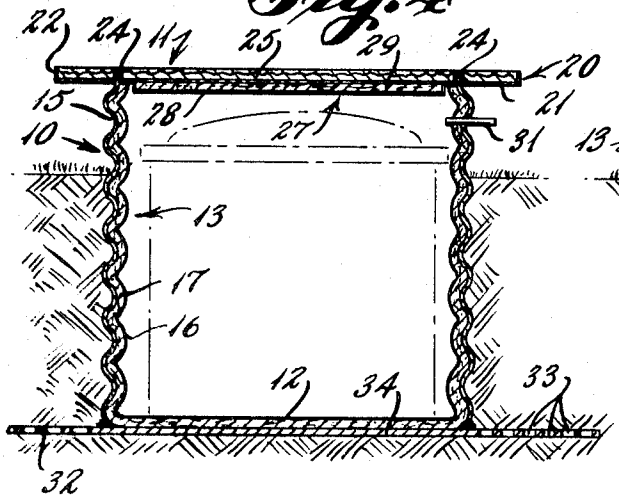

Fig. 6

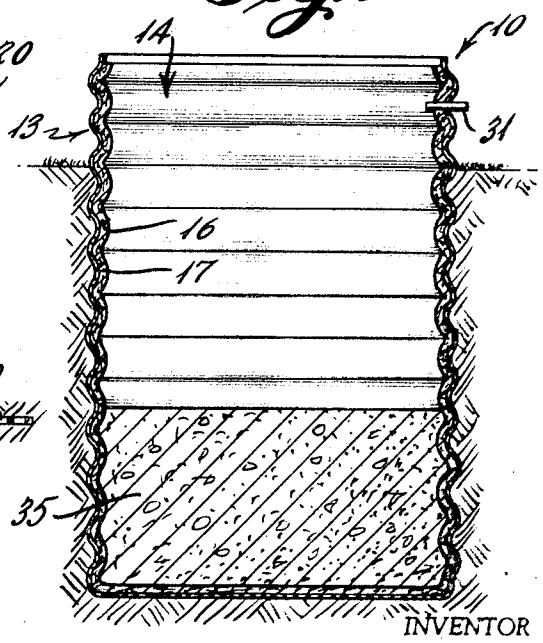

Fig. 5

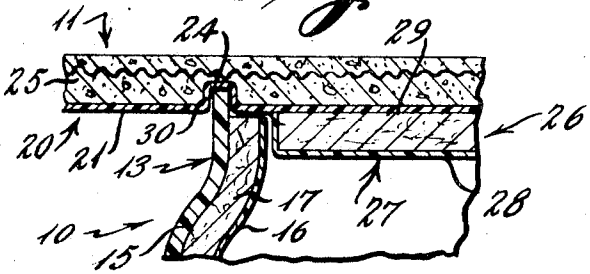

INVENTOR

GLEN A. YARBROUGH

BY

G. Zotos Alexander T. G. Zotos Alexander P.

ATTORNEYS

BURIAL VAULT

BACKGROUND OF THE INVENTION

1. Field of the Invention

This invention relates generally to undertaking and the interment of bodies, and relates particularly to burial vaults adapted to receive one or more caskets and which can be sealed after the casket has been placed within the vault.

2. Description of the Prior Art

Heretofore many efforts have been made to provide a burial vault in which a casket could be placed; however, these prior art efforts have not been entirely successful. As an example, the Weiper U.S. Pat. No. 1,073,377 discloses a vault with the upper portion located above ground level; however, this vault is constructed of relatively heavy porous building blocks which would permit the passage of air and liquid and would tend to settle and sink into the ground. The Fulton U.S. Pat. No. **3,208,186** is a burial vault of lightweight plastic having a top which can be sealed to the bottom; however, this structure requires a multiplicity of internal strengthening webs to support a large mass of earth which will be placed thereon. The Chandler et al. U.S. Pat. No. 3,439,461 is a relatively heavy vault which is constructed of wet mix concrete with a plastic resinous liner and cured, in situ, to form an integral bond. The Cenegy U.S. Pat. No. 3,283,386 is a casket having inner and outer wall structure with a filler of polyurethane foam; however, this structure is not only difficult to make but is difficult to seal in a manner to exclude air and water.

SUMMARY OF THE INVENTION

The present invention is a burial vault of lightweight construction having inner and outer liners of strong waterproof corrugated material with a foamable insulating material therebetween. The body of the vault normally is partially imbedded in the earth and is open to receive at least one casket. A top is adapted to be sealed onto the body in such a manner as to provide an airtight joint. The body is corrugated so that the surrounding earth will engage the corrugations and resist vertical movement of the body. To prevent the vault from floating in areas having a water table close to the surface, in the preferred modification, the body of the vault is provided with an outwardly extending perforated flange, and in a modified form the body is provided with a heavy weight in the lower portion thereof. If desired the body may have a tube providing communication between the interior and exterior thereof so that air can be evacuated from the vault after which the tube is sealed.

It is an object of the invention to provide a lightweight waterproof burial vault which can be partially imbedded in the earth and which will resist vertical movement.

Another object of the invention is to provide a relatively strong lightweight burial vault which can be easily sealed and from which the air can be evacuated to delay the decomposition of the tissues of the body.

BRIEF DESCRIPTION OF THE DRAWINGS

FIG. 1 is a perspective illustrating one application of the invention.

FIG. 2 is a perspective of the body of the vault.

FIG. 3 is a top plan view thereof.

FIG. 4 is a section on the line 4—4 of FIG. 1.

FIG. 5 is an enlarged fragmentary section on the line 5—5 of FIG. 1.

FIG. 6 is a section similar to FIG. 4 of a modified form of the invention.

DESCRIPTION OF THE PREFERRED EMBODIMENTS

With continued reference to the drawings, the burial vault of the present invention includes a body **10** and a top **11.** The body **10** has a bottom wall **12,** side walls **13** and end walls **14** and each of such side and end walls includes an outer liner **15** and an inner liner **16** separated by an insulating layer or filler **17.** The inner and outer liners **15** and **16** are constructed of waterproof corrugated material, such as fiberglass, polyethelene, or other material, and the insulating layer **17** preferably is constructed of a foamable material such as polyurethane, styrofoam, or the like.

The top **11** preferably includes a relatively shallow tray **20** having a bottom wall **21** with upwardly extending side walls **22** and end walls **23.** The bottom wall **21** is provided with a generally rectangular recess **24** of a size to receive the upper edges of the side and end walls **13** and **14** of the body **10.** As illustrated in FIG. **5,** the tray **20** is filled with a decorative material such as reinforced colored concrete **25,** or such tray could be filled with a terrazzo mixture of aggregate and epoxy which would be polished to a desired sheen. A memorial inscription preferably is inscribed in the material filling of the tray **20.** It is contemplated that a stone slab of marble, granite or the like could replace the tray **20** and concrete **25.** Also, it is contemplated that a window of tempered glass, clear acrylic or the like (not shown) could be inserted within the top **11.**

As illustrated best in FIGS. **4** and **5,** the top **11** may have an insulating enlargement **26** disposed in the area within the confines of the recess **24** and such enlargement includes a fiberglass liner **27** bonded to the tray **20** and has a bottom wall **28** spaced from such tray. The area between the bottom wall **21** of the tray and the bottom wall **28** of the enlargement can be filled with an insulating layer **29** of any desired material, such as a foamable polyurethane or the like.

With particular reference to FIG. **5,** a sealant **30** is placed within the recesses **24** before the top **11** is placed on the body **10** in such a manner that an airtight waterproof connection is formed between the body and the top. If desired a tube **31** can be mounted in one of the side walls **13** of the body in a position to provide communication between the interior of the body and the exterior thereof. After the top **10** has been applied, the air within the vault may be evacuated by connecting a conventional vacuum pump (not shown) to the tube **31.** When the air has been evacuated, the tube **31** is pinched or sealed to maintain at least a partial vacuum within the vault to delay the decomposition process of the body tissues.

Normally earth engaging the corrugations of the side and end walls **13** and **14,** respectively, of the body **10** will prevent any vertical movement of the vault; however, in sandy soil and in areas where the water table is close to the surface of the earth, additional means should be provided to prevent heaving and sinking of the vault. In the preferred form of the invention the body **10** is provided with an outwardly extending flange **32** having a multiplicity of openings **33** therein. The

flange may be connected to the body **10** by bonding the same directly to the side walls **13** and end walls **14**, or as illustrated in FIG. **4**, the flange **32** constitutes the outer edges of a plate **34** adhered to the bottom wall **12** of the body. The flange **32** extends outwardly a substantial distance from the body so that earth located above and below the same will prevent any vertical movement of the body.

With reference to FIG. **6**, in areas where the major concern is the heaving or floating of the body **10** by hydrostatic pressure, the flange **32** may be omitted and the body **10** may be deeper than the previous modification and the lower portion of such body can be filled with concrete, rocks or other heavy material **35** which will supply additional weight to the vault.

In the use of the device, a hole of a desired length, width and depth is dug in the earth and preferably a layer of wet sand or a mixture of sand and gravel is placed in the bottom of the hole. Thereafter the body **10** is placed on the layer of sand or gravel and earth is filled in around the sides and ends of the body. When the body includes a flange **32**, several inches of sand or gravel may be placed on top of the flange before the area between the hole and the body is filled in with earth. The earth preferably is tamped while it is being replaced so that the earth will fill the undulations between the corrugated sides and ends of the body **10**. After the body has been partially imbedded within the earth, the top **11** can be placed thereon ready for use. When a body is to be interred, the top is removed to permit a coffin to be lowered into the body **10** after which the sealant **30** is placed within the recess **24** and the top **11** again is placed on the body **10** with the upper edge of the body being received within the recess **24**. If desired, a vacuum pump can be connected to the tube **31** so that the air within the body **10** can be evacuated at which time atmospheric air pressing downwardly on the top **11** will cause the sealant **30** to form a more perfect seal. After the air has been evacuated, the tube **31** is sealed so that air, and moisture will be excluded from the body **10** and the decomposition of the corpse will be delayed.

I claim:

1. A generally rectangular burial vault comprising a body having substantially horizontally corrugated side and end walls and an integral bottom wall, portions of said side walls and end walls extending above the ground, each of said side and end walls having a spaced complementary liner of waterproof material, a layer of foamable insulating material disposed between and connecting said walls and said liners, a top for said body, said top having a layer of material with a decorative upper surface for receiving an inscription, said layer extending laterally outwardly of said side and end walls, the lower portion of said top including a recess of a size and configuration to receive the upper edge of said side and end walls, a sealant receivable within said recess for bonding said top to said body to form an airtight compartment, and tube means connected in and extending through one of said side walls above the ground and providing communication between the interior and exterior of said body so that air can be evacuated therefrom after the top has been sealed onto said body, whereby the corrugated sides of said body substantially prevent vertical movement when the body is at least partially imbedded in the earth.

2. The structure of claim **1** including at least one flange connected to said bottom wall and extending outwardly from at least two sides of said body.

3. The structure of claim **1** including a heavy mass mounted on said bottom wall within said body to resist upward movement of said body by hydrostatic pressure.

4. The structure of claim **1** in which said top includes a downwardly extending enlargement located intermediate the liners of said side and end walls.

* * * * *