United States Patent [19]

Gillock

[11] **3,737,613**

[45] **June 5, 1973**

[54] **INDUCTOR FOR HEATING AN ELONGATED WORKPIECE HAVING DIFFERENT CROSS-SECTIONS**

[75] Inventor: **Jack W. Gillock,** Parma, Ohio

[73] Assignee: **Park-Ohio Industries, Inc.,** Cleveland, Ohio

[22] Filed: **Sept. 29, 1971**

[21] Appl. No.: **184,931**

Related U.S. Application Data

[63] Continuation of Ser. No. 37,254, May 14, 1970, abandoned.

[52] **U.S. Cl.** **219/10.79,** 219/10.43

[51] **Int. Cl.** **H05b 9/02**

[58] **Field of Search** 219/10.79, 10.43

[56] **References Cited**

UNITED STATES PATENTS

3,483,346 12/1969 Seulen et al. .....219/10.79 X

FOREIGN PATENTS OR APPLICATIONS

710,426 6/1954 Great Britain.....219/10.43

1,947,275 4/1970 Germany.....219/10.79

Primary Examiner—J. V. Truhe
Assistant Examiner—Hugh D. Jaeger
Attorney—Robert V. Vickers

[57] **ABSTRACT**

An inductor for inductively heating an elongated workpiece having a length, central axis, a first cylindrical portion with a radius *r* and a second cylindrical portion with a radius *r'*, wherein the cylindrical portions are generally concentric with the axis and *r* and *r'* are substantially different. This inductor includes first and second generally parallel conductors extending substantially the complete length of the workpiece, cross-over conductors connecting the parallel conductors at their respective ends and the parallel conductors each have a first section adjacent the first cylindrical portion of the workpiece and a second section adjacent the second cylindrical portion of the workpiece with the effective widths of these sections being different to effect uniform heating of the workpiece.

1 Claim, 6 Drawing Figures

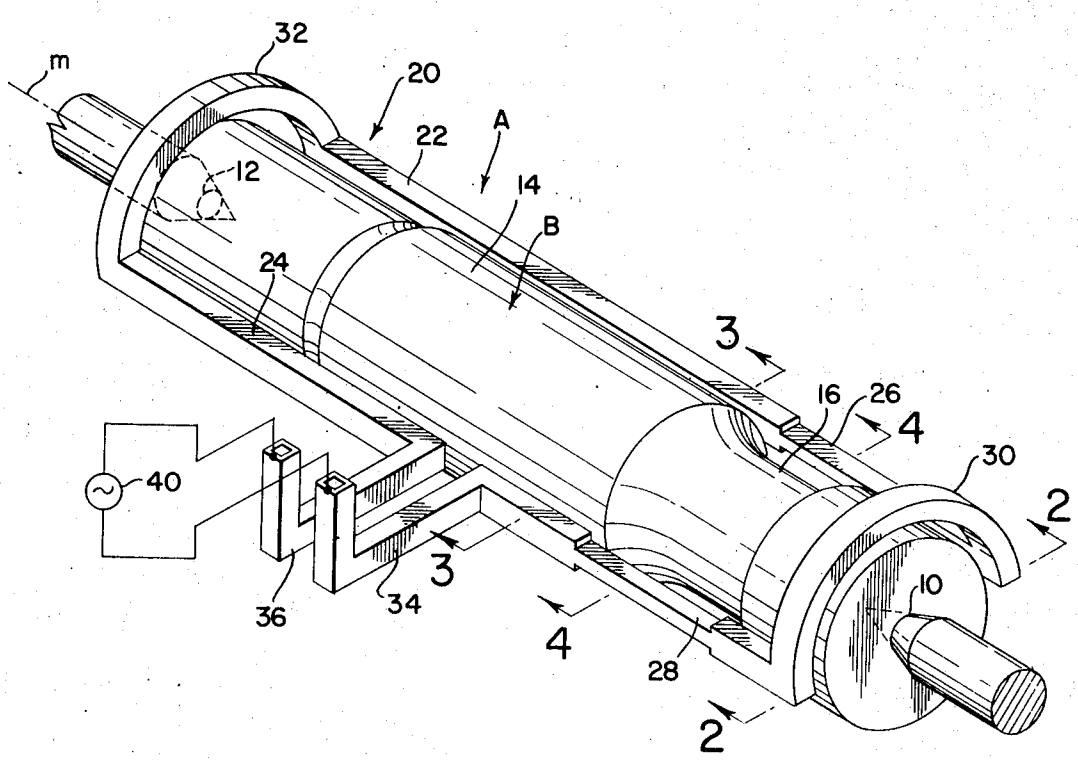

FIG. 1

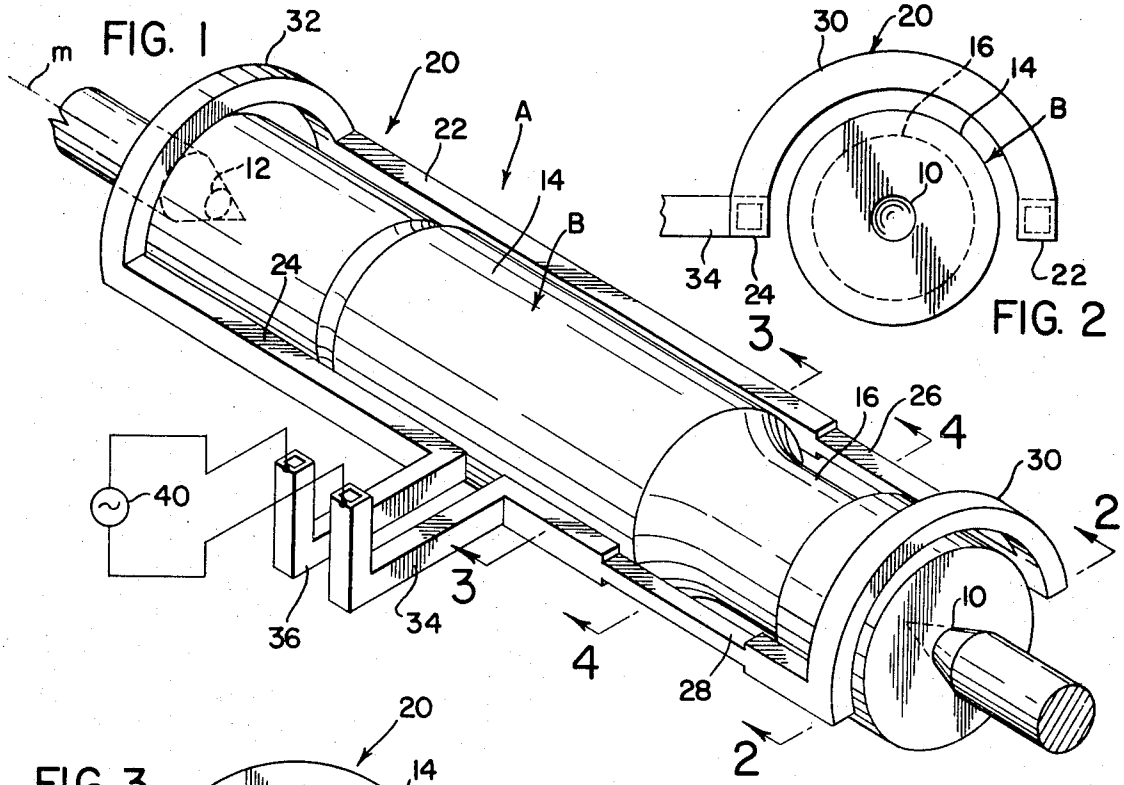

FIG. 2

FIG. 3

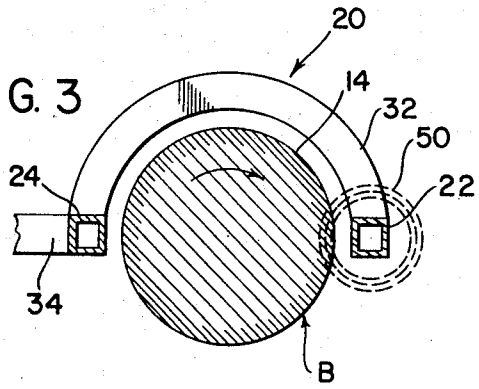

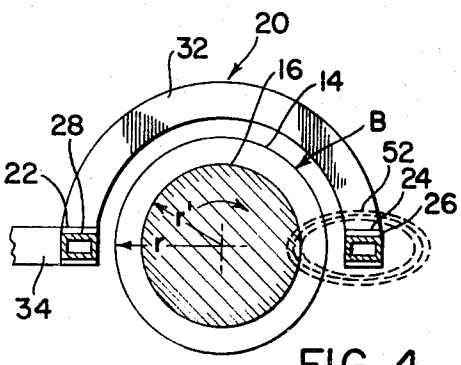

FIG. 4

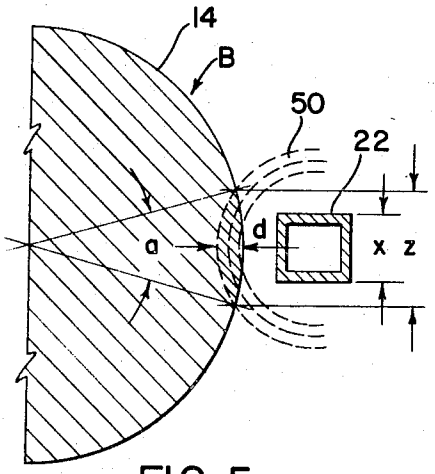

FIG. 5

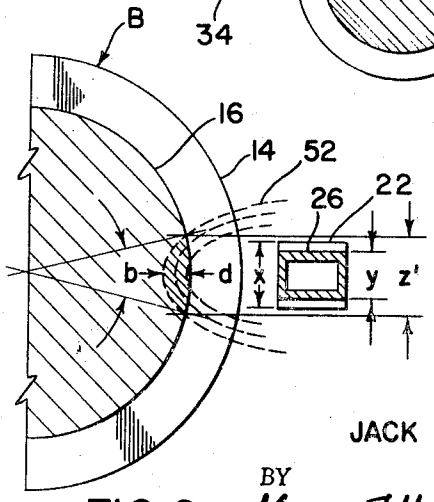

FIG. 6

INVENTOR.
JACK W. GILLOCK

BY
Meyer, Tilberry & Body
ATTORNEYS

INDUCTOR FOR HEATING AN ELONGATED WORKPIECE HAVING DIFFERENT CROSS-SECTIONS

This is a continuation of application Ser. No. 37,254, filed May 14, 1970, now abandoned.

The present invention relates to the art of induction heating and more particularly to an inductor for inductively heating an elongated workpiece having at least two different cross-sections along its length.

The invention is particularly applicable for heating the complete length of an axle shaft and it will be described with particular reference thereto; however, it should be appreciated that the invention has much broader applications and may be used for heating various other elongated workpieces.

It has become common practice to harden axle shafts by rotating them about a vertical axis and progressing an encircling inductor upwardly along the length of the axle shaft. This inductor progressively, inductively heats the length of the axle shaft. Directly below the encircling inductor there is provided an encircling quench body which progressively quench hardens the previously heated portions of the axle shaft. This arrangement has met with considerable success and is widely used; however, in recent times substantial development work has been devoted to induction heating equipment which inductively heat the total length of the axle shaft at one time. Thereafter, the total axle shaft is quench hardened. To accomplish this, there is provided an inductor having parallel conductors extending substantially the complete length of the axle shaft. Cross-over conductors are provided at the respective ends of these conductors, and leads are connected to one parallel conductor at a portion where it is divided to define an electrical path between the leads and through the various conductors. The present invention relates to an improvement in this type of conductor.

When progressively moving an encircling inductor along the length of an axle shaft, it is not difficult to adjust the power to the inductor when the diameter of the axle shaft changes along its length. When using a single inductor having two parallel conductors extending the complete length of the axle shaft, this adjustment to compensate for changes in the diameter and cross-section of the axle shaft, is not possible. The same current flows through all portions of the heating inductor. In accordance with the present invention, the parallel conductors are provided with means for modifying the flux field adjacent a certain cylindrical portion or portions of the axle shaft to reduce non-uniformity in the heating of the axle shaft. This modified means is preferably a change in the effective width of at least one parallel conductor adjacent a cylindrical portion having a different diameter.

In accordance with the present invention, there is provided an inductor of the type having two parallel conductors extending along the length of the workpiece having a first cylindrical portion with a radius r and a second cylindrical portion with a radius r'. At least one of these parallel conductors has a first section adjacent the first cylindrical portion of the workpiece and a second section adjacent the second cylindrical portion of the workpiece with the width of the first section being x and the effective width of the second portion being y, and x and y being substantially different to effect more uniform heating along the total length of the workpiece.

The primary object of the present invention is the provision of an induction heating device for an elongated workpiece having various cross-sections, which device includes an inductor having two parallel conductors with the effective widths of the conductors being varied to change the heating effect of the parallel conductors with respect to the different cylindrical portions of the workpiece.

Another object of the present invention is the provision of an inductor having two parallel conductors extending the length of the workpiece wherein at least one of the parallel conductors has a means for modifying the flux field in an area adjacent a portion of the workpiece having a different cross-section.

Another object of the present invention is the provision of an inductor having two parallel conductors for heating the total length of an elongated workpiece, which inductor can uniformly heat the workpiece as it rotates, even though the workpiece has different cross-sections.

These and other objects and advantages will become apparent from the following description taken together with the accompanying drawings in which:

FIG. **1** is a pictorial view illustrating, schematically, the preferred embodiment of the present invention;

FIG. **2** is an enlarged cross-sectional view taken generally along line **2—2** of FIG. **1**;

FIG. **3** is an enlarged cross-sectional view taken generally along line **3—3** of FIG. **1**;

FIG. **4** is an enlarged cross-sectional view taken generally along line **4—4** of FIG. **1**; and,

FIGS. **5** and **6** are schematic views illustrating the operation of the preferred embodiment sas shown in FIG. **1**.

Referring now to the drawings wherein the showings are for the purpose of illustrating a preferred embodiment of the invention only and not for the purpose of limiting same, FIGS. **1–4** show an induction heating apparatus A for inductively heating workpiece B having centers **10, 12** defining a central axis m and cylindrical portions **14, 16** having radius r, r', respectively. The apparatus A includes a means (not shown) for rotating the workpiece and an inductor **20** having parallel conductors **22, 24** divided into two separate sections defined by reduced portions or sections **26, 28.** The effective width of the conductors **22, 24** adjacent cylindrical portion **14** is x whereas the effective width of the sections **26, 28** is y. This concept is shown in FIGS. **5** and **6** and forms the essence of the present invention. Cross-over conductors **30, 32** connect the parallel conductors **22, 24** at their respective ends. Appropriate leads **34, 36** are connected with conductor **24,** which is divided to form an electrical path through the inductor **20.** These leads are, in turn, connected across the output of an appropriate high frequency power supply, designated as generator **40.** As so far described, the effective width of conductors **22, 24** is reduced at the reduced cylindrical portion **16.** The purpose of this reduction will be described in detail.

Referring now to FIG. **3,** there is schematically illustrated, a field **50** which is generated around conductor **22.** In a like manner, FIG. **4** illustrates, schematically, a field **52** created around the reduced portion **26** of conductor **24.** The operation of these two schematically illustrated fields **50, 52** is depicted in FIGS. **5** and **6.** Field **50** is created by the portion of conductor **22** having an effective width x. This field is coupled with

the cylindrical portion **14** of workpiece B over a circumferentially extending portion z defined by the included angle a. As the workpiece is rotated during the heating operation, the portion z is relatively wide, so that a large proportion of the surface **14** is being heated at any one instant. If the width of conductor **22** were the same adjacent the reduced portion **16**, then the width of the portion being heated at a given instant would be substantially the same as portion z. This would cause an increased preheating of the workpiece and overheating in the reduced portion **16**. Consequently, the core would become overheated and prevent a well defined hardened pattern after quench hardening. By providing the reduced portion **26** having a width y, as shown in FIG. **6**, the schematically illustrated field **52** defines a smaller heating pattern within the reduced portion **16**. This heating pattern has a width z' and is defined between the included angle b. By providing a smaller width z' of the heated area in the reduced portion **16**, portion **16** is heated substantially at the same rate as larger portion **14**. This arrangement reduces the tendency of the smaller cross-section to be overheated during the heating process for the whole workpiece. Consequently, a better defined hardness pattern is created during subsequent quench hardening. The frequency of the current flowing in inductor **20** determines the depth of induction heating. This depth, d, is the same for both portions **14, 16** because the reduction in conductor width does not change the frequency. The change in effective width of the parallel conductor changes the circumferential heated area which effects the total heating of the respective portions.

It is within the scope of the present invention to also provide other devices for modifying the flux field coupled with the reduced portion **16** to effect a reduced

area of heating; however, in accordance with the preferred embodiment, the change in the coupling flux field is created by a reduction in the effective width of the parallel conductors. Effective width **11** means, primarily, the width of the conductor profile as viewed from the center of the workpiece. As previously mentioned, the conductors **22, 24** are relatively long. This, in accordance with the invention, indicator that the length of these conductors is at least ten times the largest diameter r of the workpiece being rotated and heated.

Having thus defined my invention, I claim:

1. In an inductor for inductively heating an elongated workpiece rotating about a central axis and having a length, a first cylindrical portion with a radius r and a second cylindrical portion with a radius r', wherein said cylindrical portions are generally concentric with said central axis and r is greater than r', said inductor comprising: first and second generally parallel conductors extending substantially the complete length of said workpiece in an axial direction and over both of said cylindrical portions, one of said parallel conductors being separated into two portions, cross-over conductors connecting said parallel conductors at their respective ends and lead-in conductor means at said separation of said one parallel conductor for connecting said inductor to a power means, the improvement comprising: at least one of said parallel conductors having a first section adjacent said first cylindrical portion and a second section adjacent said second cylindrical portion, the effective width of said first section being x, the width of said second section being y, and x being greater than y, and whereby said sections remain adjacent said respective portions during heating.

* * * * *