United States Patent [19]

Palson

[11] **3,737,067**

[45] **June 5, 1973**

[54] **PLASTIC BOX HAVING INTEGRALLY MOLDED LATCH**

[75] Inventor: **Richard C. J. Palson,** Medfield, Mass.

[73] Assignee: **A. J. Krajewski Manufacturing Company,** Cranston, R.I.

[22] Filed: **Feb. 22, 1971**

[21] Appl. No.: **117,580**

[52] **U.S. Cl.** .....**220/60 R,** 220/31 S

[51] **Int. Cl.** **B65d 43/10**

[58] **Field of Search** .....220/60 R, 31 S; 206/DIG. 36

[56] **References Cited**

UNITED STATES PATENTS

D213,157	1/1969	Wallace	206/DIG. 36
3,025,950	3/1962	Nathan	220/31 S X
3,410,391	11/1968	Kanter	220/31 S X
3,424,341	1/1969	Slapnik	220/60 R
3,499,525	3/1970	Kanter	220/31 S X
3,612,233	10/1971	Nagpal et al	206/DIG. 36

Primary Examiner—George E. Lowrance
Assistant Examiner—James R. Garrett
Attorney—Salter & Michaelson

[57] **ABSTRACT**

A plastic box including a base and cover molded in a unitary construction and having an integrally molded latch that has a projection formed thereon, the latch being pivotally movable when the base and cover are moved to the closed position thereof to lock the base and cover together.

1 Claim, 3 Drawing Figures

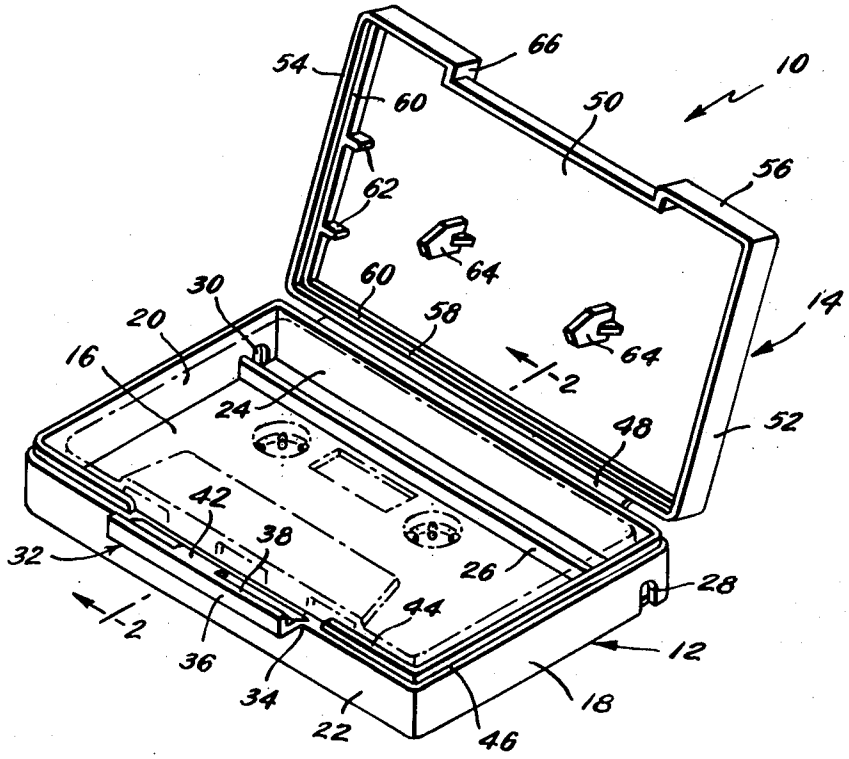

Fig. 1.

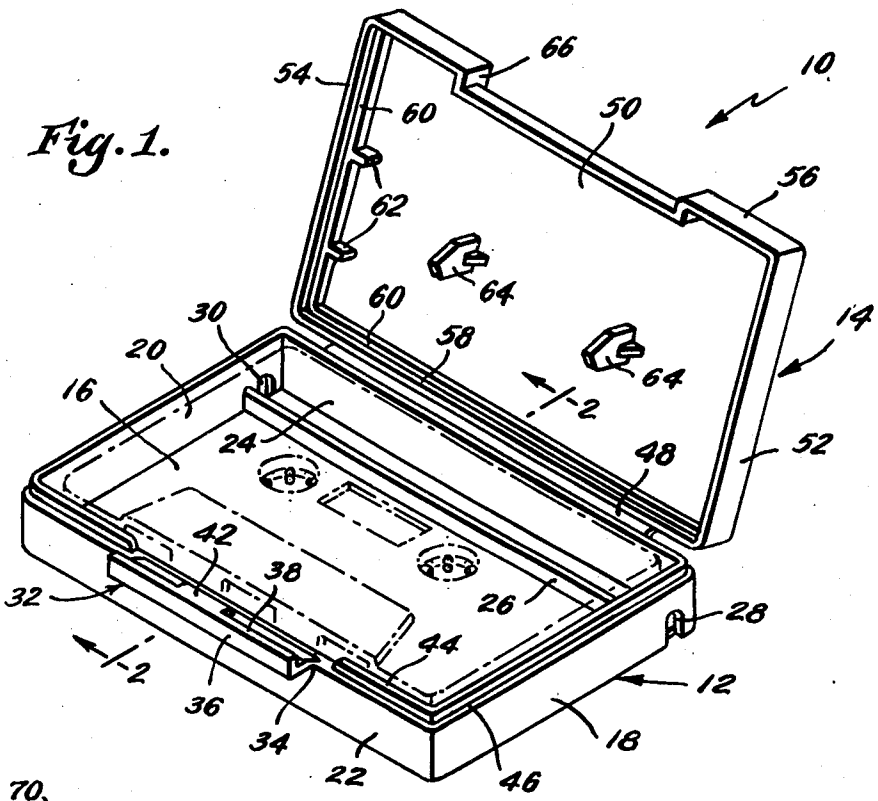

Fig. 2.

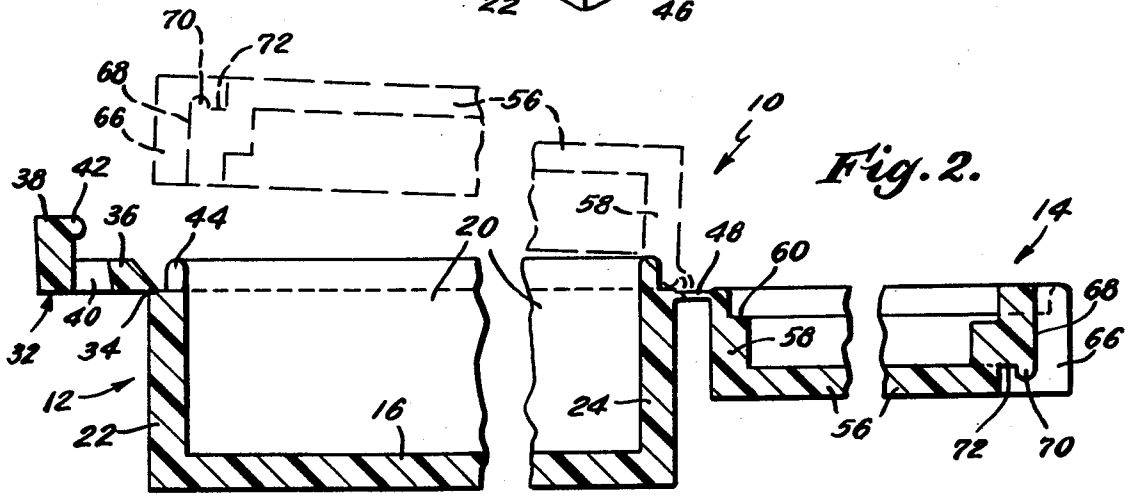

Fig. 3.

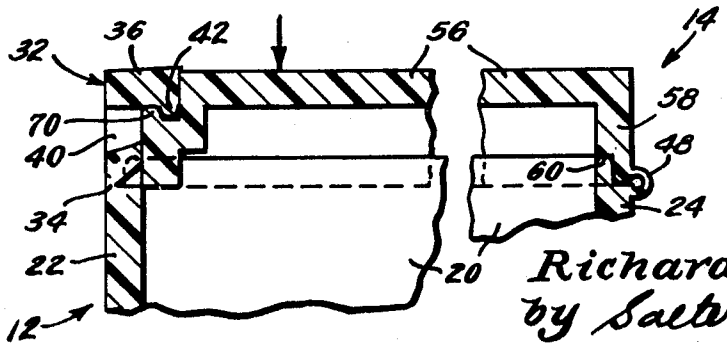

Inventor,
Richard C. J. Palson,
by Salter & Michaelson
Att'ys.

PLASTIC BOX HAVING INTEGRALLY MOLDED LATCH

BACKGROUND OF THE INVENTION

The present invention relates to a plastic box that is molded in a one-piece construction and has particular application as a container for a tape cartridge.

Tape cartridges of the type that are used in cassette tape units are normally displayed for sale in some form of a wrapper or cover or the like. Because the tape cartridge is subject to wear due to handling by customers and in shipping, a more durable type of container is desirable for retaining the tape cartridge therein. Prior to the instant invention such containers for tape cartridges have been employed, but have normally been somewhat bulky in construction and have been formed in a two piece unit requiring separate hinge means for hinging the cover of the case to the base thereof. In addition a special latch or lock mechanism was required for retaining the cover in locked position on the base, and since the cost of the case or container in which a cartridge is packaged is quite critical, these prior known cases have not been entirely satisfactory.

SUMMARY OF THE INVENTION

The present invention includes a plastic case for use as a tape cartridge case that is molded of a plastic material in a one-piece unitary construction and that is relatively inexpensive in comparison to the prior known cartridge cases.

The box construction of the present invention is formed with a base and a cover that are hingedly interconnected through a plastic hinge that is molded as an integral part of the base and cover. Joined to the base is a pivotally mounted latch that is also molded as an integral part of the box unit, the latch having a projection on an inwardly directed flange that is cammed into engaging relation in a groove formed in the cover. The entire box construction is molded in a single operation and thereby avoids the use of rivets, hinges, pins and other metal fasteners that have normally been used in covered boxes heretofore. As the box is molded, it is ready for use and can immediately receive an article such as a tape cartridge therein without the requirement of attaching other fastening devices thereto.

Accordingly, it is an object of the present invention to provide a box construction having a cover, base and latch all molded in a unitary construction.

Another object of the invention is to provide a latch for use in a molded box construction that is pivotally joined to a member of the box and that is movable to a locked position when the box members are closed.

Still another object is to provide a one-piece plastic box having a base member integrally joined to a cover member in hinging relation, the front wall of one of the members having a notch formed therein and the front wall of the other member having a pivotally mounted latch joined thereto, the latch being cammed into the groove to lock the members together when they are moved to the closed position thereof.

Still another object is to provide a latch for use in a box that has an inwardly directed flange formed on a member thereto, the flange being received in a groove having a lip formed on the edge of another member, the latch and groove being molded as part of the members, wherein the latch is cammed into engagement with the groove when the members are located in the closed position thereof.

Still another object is to provide a box having a cover member joined to a base member in a one-piece unitary construction, the top wall of the cover member being deflectable upon the application of external pressure thereto, wherein a latch joined to the bottom wall and located in engaging relation with the cover member is released therefrom to unlatch the base member and cover member from the closed position thereof.

Other objects, features and advantages of the invention shall become apparent as the description thereof proceeds when considered in connection with the accompanying illustrative drawings.

DESCRIPTION OF THE DRAWING

In the drawing which illustrates the best mode presently contemplated for carrying out the present invention:

FIG. **1** is a perspective view of the box embodied in the present invention, the cover member of the box being shown in the open position thereof;

FIG. **2** is a sectional view taken along line **2—2** in FIG. **1**, the cover member being illustrated in the fully opened position thereof; and

FIG. **3** is a view similar to FIG. **2**, but showing the cover member pivoted to the closed position on the base member and locked thereon by the latch that is integrally molded to the base member.

DESCRIPTION OF THE INVENTION

Referring now to the drawing and particularly to FIG. **1**, the box embodied in the present invention is illustrated and is generally indicated at **10**. As will be described, the box **10** has particular application as a case for tape cartridges; although it is understood that the concept of the invention embodied herein is not restricted to the use of the box for the purpose as described, and quite to the contrary, the concept of the invention may be applied to a variety of containers and receptacles, regardless of the intended use thereof.

The box **10** is molded as an integral one-piece unit and includes a base member generally indicated at **12** to which a cover member generally indicated at **14** is hingedly connected. The base member **12** is formed with a bottom wall **16** to which side walls **18** and **20**, a front wall **22** and a rear wall **24** are joined. A reinforcing rib **26** extends across the bottom wall **16** and is joined to the side walls **18** and **20** and acts to reinforce the base member **12**. The rib **26** is spaced from the rear wall **24** and further defines a channel for receiving a rod of a display rack on which the box **10** would be mounted for the display thereof. In order to mount the box construction on the rod as indicated, openings **28** and **30** are formed in the side walls **18** and **20** respectively. As will be apparent, the rib **26** also elevates the article located within the base member **12** of the box so that the rod that extends through the openings **28** and **30** can be received in the channel.

As more clearly illustrated in FIG. **2**, the latch that defines the novel concept in the subject invention is generally indicated at **32** and is integrally joined to the front wall **22** of the base member **12** by a plastic hinge **34** that is formed in the molding of the box **10**. It is understood that the cross-sectional dimension of the plastic hinge **34** is somewhat reduced with respect to the thickness of the walls of the box members thereby en-

abling the latch 32 to be conveniently pivoted with respect to the front wall 22. The latch 32 includes a lock member 36 that has an inwardly directed flange 38 formed thereon, the lock member 36 being located intermediate the front wall 22 and having a slot 40 formed therein. Joined to the inwardly directed flange 38 and disposed directly opposite to the slot 40 is a projection 42, it being understood that the slot 40 enables the projection 42 to be conveniently formed during the molding operation.

Referring again to FIG. 1, the bottom member 12 is shown including an upwardly extending lip 44 that is formed directly on the upper peripheral edges of the side, front and rear walls of the base member 12. The lip 44 defines outer marginal flanges 46 on the upper edge of the walls of the base member 12 and as will be described the marginal flanges 46 receive the corresponding edges of the walls of the cover member 14. It will be noted that the lip 44 is interrupted on the upper edge of the front wall 22 so as to accommodate the pivotally mounted latch 32 thereon.

Pivotally connecting the cover member 14 to the base member 12 is a plastic hinge 48, which as illustrated in FIG. 2 is also of reduced cross-sectional dimension which provides for pivotal movement of the cover member 14 with respect to the base member 12. As seen in FIGS. 2 and 3, the plastic hinge 48 is molded directly to the upper edge of the rear wall 24 of the base member 12 and is also molded directly to the corresponding rear wall of the cover member 14 as will be described.

The cover member 14 includes a top wall 50 to which are joined side walls 52 and 54, a front wall 56 and a rear wall 58. Each of the walls 52, 54 and 58 includes a reduced shoulder 60 that extends the length thereof, the shoulder being continuously formed around the perimeter of the walls 52, 54 and 58 of the top member 14 and providing for additional strength for these walls. Cleats 62 are joined to the reduced portions 60 of the side walls 52 and 54 and not only act to further strengthen the top wall 50 and the side walls joined thereto but also form means for locating a cartridge therebetween in use of the box. As previously described, the rear wall 58 of the top member 14 is joined directly to the plastic hinge 48 and is molded in integral relation therewith.

Outwardly extending spaced lugs 64 are molded to the interior surface of the top wall 50 and are somewhat tapered in configuration. The lugs 64 are designed to retain a tape cartridge in place when the tape cartridge is located in the box 10. In this connection the lugs 64 are adapted to be received within the spool openings of the tape cartridge shown in phantom in FIG. 1 and thereby cooperate with the cleats 62 to align the tape cartridge within the base member 12 of the box, thereby preventing the tape cartridge from laterally shifting when the cover member 14 is latched to the base member 12.

Formed in the front wall 56 of the cover member 14 and extending inwardly into the peripheral edge of the top wall 50, is a notch 66 that corresponds in length and thickness to the latch member 36. As more clearly illustrated in FIG. 2, the notch 66 terminates in an inner wall 68 on which a lip 70 is formed at the outermost end thereof, the lip 70 being formed on the edge of a longitudinally extending groove 72 that defines the seat of the notch 66.

When the top member 14 is moved into overlying relation with respect to the base member 12, the latch 32 is engageable in the notch 66 and the projection 42 is receivable in the groove 72 for locking the members in the closed position thereof. As further shown in FIG. 3, the projection 42 of the latch 32 normally strikes the lip 70 when the latch 32 is pivoted toward the closed position thereof. Inwardly directed pressure against the latch member 36 causes the projection 42 to cam over the lip 70 until the projection 42 is received in back of the lip 70 and within the groove 72. In this position, as illustrated in FIG. 3, the box members are locked in place. It will also be noted that in the closed position of the latch 32, the outer surface of the latch member 36 is substantially continuous with the outer surface of the walls 22 and 56 thereby forming a clean and uninterrupted wall surface. The marginal flanges 46 also receive the outer edges of the walls of the cover member 14 in flush engagement therewith.

When it is desired to open the cover member 14, the latch 32 may be stripped from the latched position by grasping the latch member 36 and pulling outwardly until the projection 42 is pulled over the lip 70. However, such a procedure is somewhat clumsy, and the latch may be disengaged from its closed position by merely exerting inward pressure on the top wall 50 as indicated by the arrow in FIG. 3. This forces the top wall 50 and front wall 56 of the cover member 14 downwardly in the area where the pressure is exerted, thereby removing the projection 42 from the groove 72. Since the projection 42 had been cammed into engaging relation within the groove 72, and further because of the stresses exerted on the plastic hinge 34, the latch 32 will tend to return to the open position when the projection 42 is released fro the groove 72.

It is seen that the box 10 is simple in the details thereof as moldable in the unitary one-piece construction. The plastic preferably used in the molding of the box construction is polypropylene which has been found particularly suitable for plastic hinges of the type illustrated and described herein, wherein the hinges can be constantly pivoted in a hinging action without rupturing. The use of the pivotally mounted latch 32 that is molded as an integral part of the one-piece box not only provides a positive acting lock for the box members but also materially reduces the cost of the box, since the use of external fastening elements are avoided. It is seen that when the projection 42 is snapped or cammed over the lip 70 into the groove 72, the cover member 14 is securely latched to the base member 12 and the box can be displayed or handled without the members inadvertedly becoming unlatched.

While there is shown and described herein certain specific structure embodying the invention, it will be manifest to those skilled in the art that various modifications and rearrangements of the parts may be made without departing from the spirit and scope of the underlying inventive concept and that the same is not limited to the particular forms herein shown and described.

I claim:

1. A box construction comprising an integral one-piece unit molded of a plastic material, said unit including a base member having a bottom wall, side walls, a rear wall and a front wall joined to said bottom wall, and a cover member having a top wall, side walls, a rear

wall and a front wall joined to said top wall, a hinge integrally molded to the rear wall of said base member and to the rear wall of said cover member for hingedly interconnecting said base and cover members, a latch integrally joined to the front wall of said base member and being hingedly connected thereto along a hinge axis thereof, said latch and the hinge axis thereof extending parallel with respect to the front wall of said base member but less than the full length thereof, said latch including a body portion having a flange that extends rearwardly of said base member front wall when the latch is in the closed position thereof, and a projection formed on said flange on the innermost end thereof and being located inwardly of the front wall of said base member and projecting downwardly with respect thereto when the latch is located in the closed position thereof, the front wall of said cover member having a notch formed therein that extends less than the full dimension thereof and is shaped and proportioned for receiving the pivotal latch therein when the cover member is closed, a lip formed on the front wall of said cover member along the length of said notch, and a groove formed behind the lip and extending the length of said notch in the front wall of said cover member, said lip forming a camming edge over which the projection on said latch is forced when said cover member is moved to the closed position thereof, said projection on said latch being received in said groove for locking said cover member on said base member in the closed position, the dimension of the thickness of the body portion of said latch being substantially the same as the lateral dimension of said notch, wherein said latch is fully received in said notch in the locking position and the outer surfaces of the latch are substantially coplanar with the adjacent surfaces of the front wall of said base member.

* * * * *