United States Patent [19]

West

[11] 3,736,993

[45] June 5, 1973

[54] **HIGH TORQUE BORING MACHINE**

[75] Inventor: **Harold H. West,** Seattle, Wash.

[73] Assignee: **The Robbins Company,** Seattle, Wash.

[22] Filed: **July 15, 1971**

[21] Appl. No.: **162,843**

[52] **U.S. Cl.** **173/163,** 173/152
[51] **Int. Cl.** **E21b 3/02**
[58] **Field of Search**.....173/57, 152, 163; 175/85, 122, 170

[56] **References Cited**

UNITED STATES PATENTS

1,398,551 11/1921 Hanson.....173/57 X

2,863,638 12/1958 Thornburg 173/57

Primary Examiner—Ernest R. Purser
Attorney—John O. Graybeal, George M. Cole and Delbert J. Barnard

[57] **ABSTRACT**

A traveling support frame is mounted for up and down travel along upstanding guide columns. Drilling equipment is carried by the traveling frame. The drilling equipment includes a drive head and means coupling it to a rotary drive member in such a way that bending forces imposed on the drill stem are not transmitted by the drill head to such drive member.

7 Claims, 4 Drawing Figures

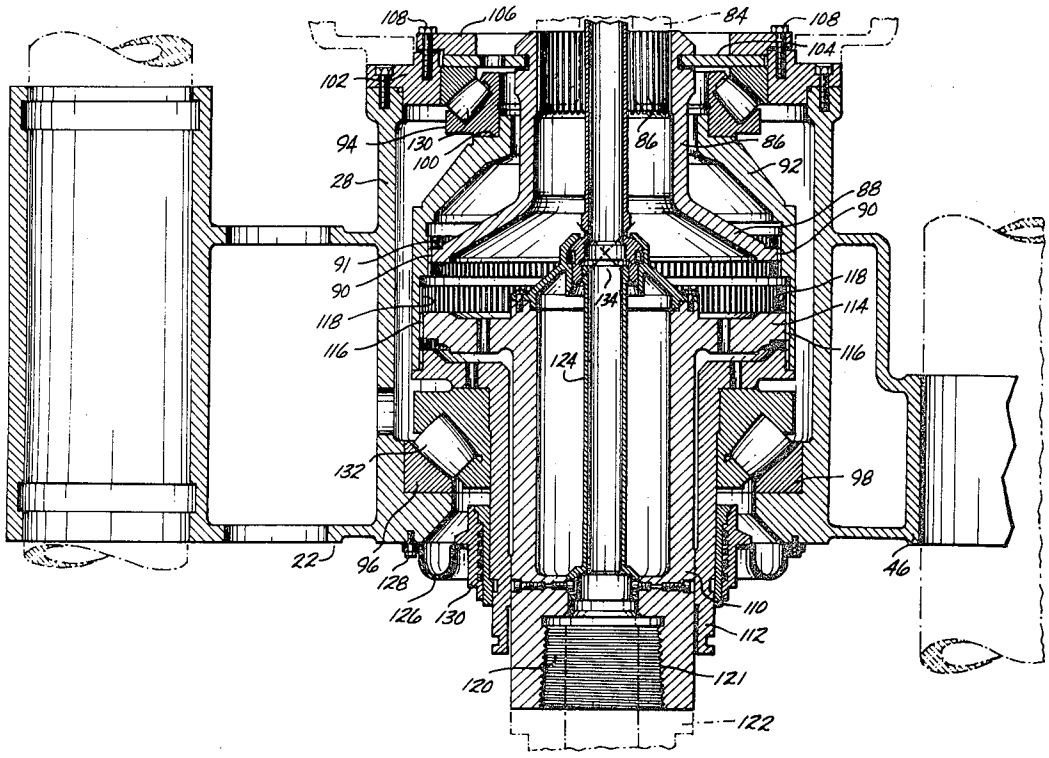

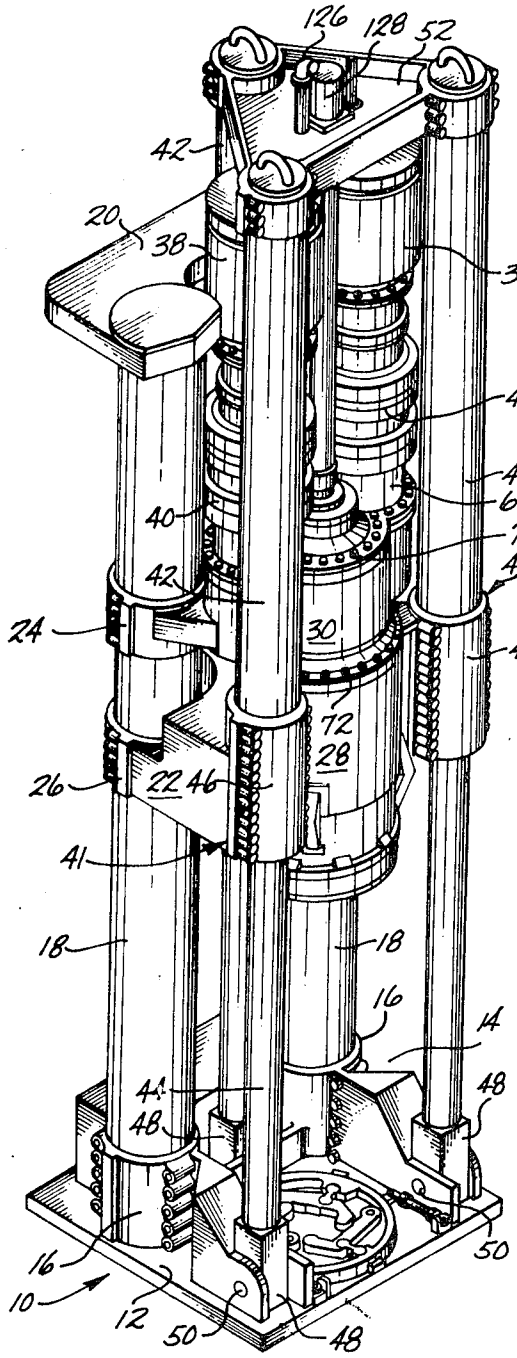

Fig. 1

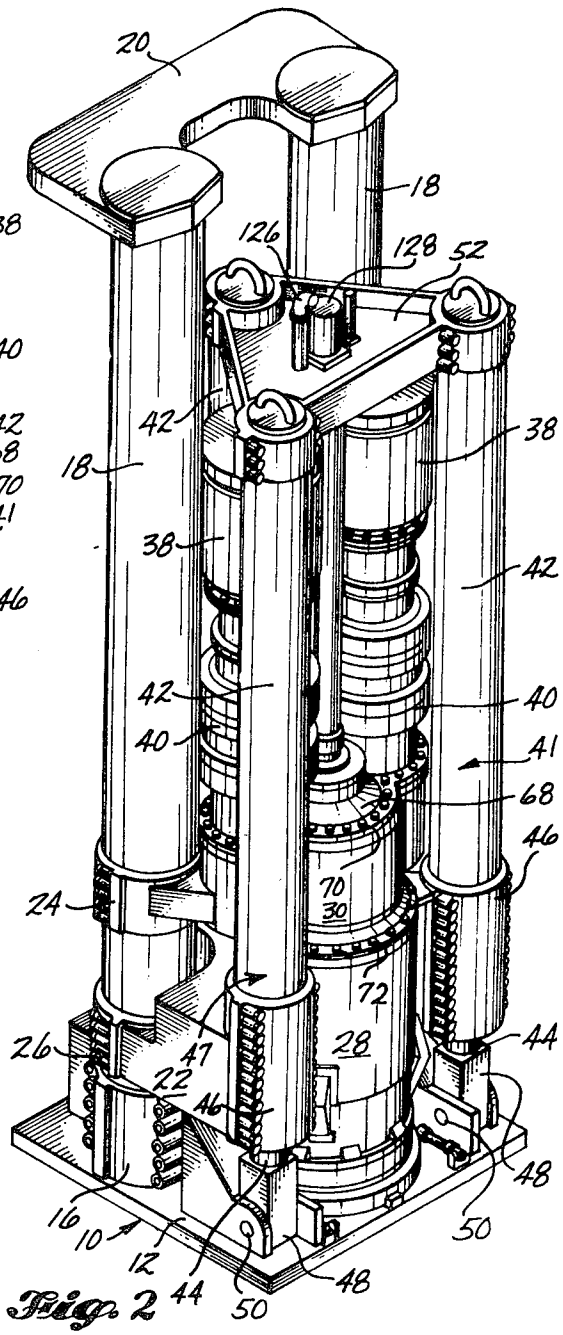

Fig. 2

INVENTOR.
HAROLD H. WEST
Graybeal, Cole & Barnard
ATTORNEYS

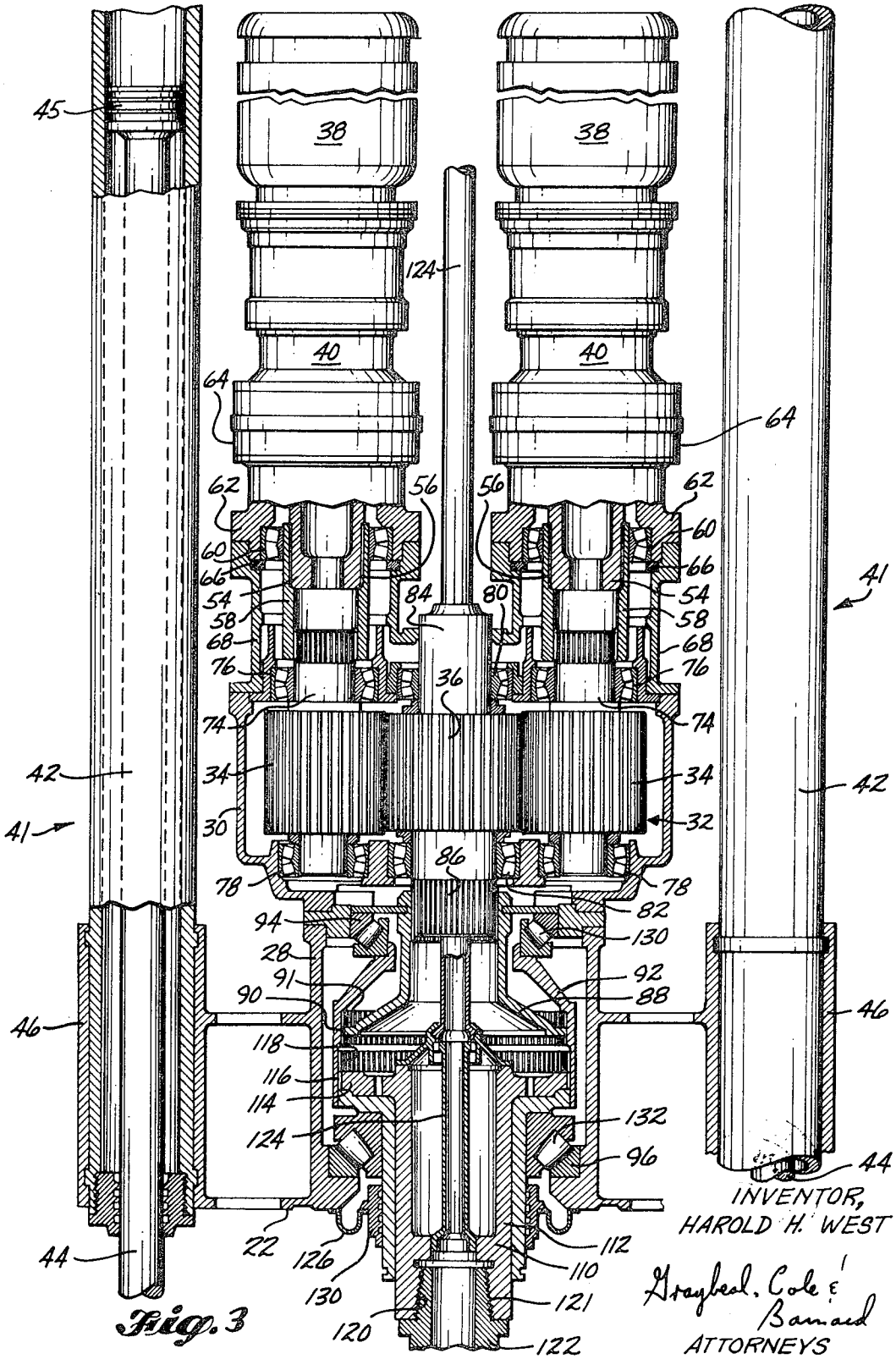
45
38
38
124
40
40
64
64
62
56
56
62
60
60
66
66
54
54
58
58
68
68
76
76
84
80
36
74
74
41
42
42
34
34
30
32
41
86
78
78
82
94
130
28
91
92
90
88
46
46
118
116
114
124
132
96
44
44
22
126
130
112
110
121
120
122
INVENTOR,
HAROLD H. WEST
Graybeal, Cole & Barnard
ATTORNEYS

Fig. 3

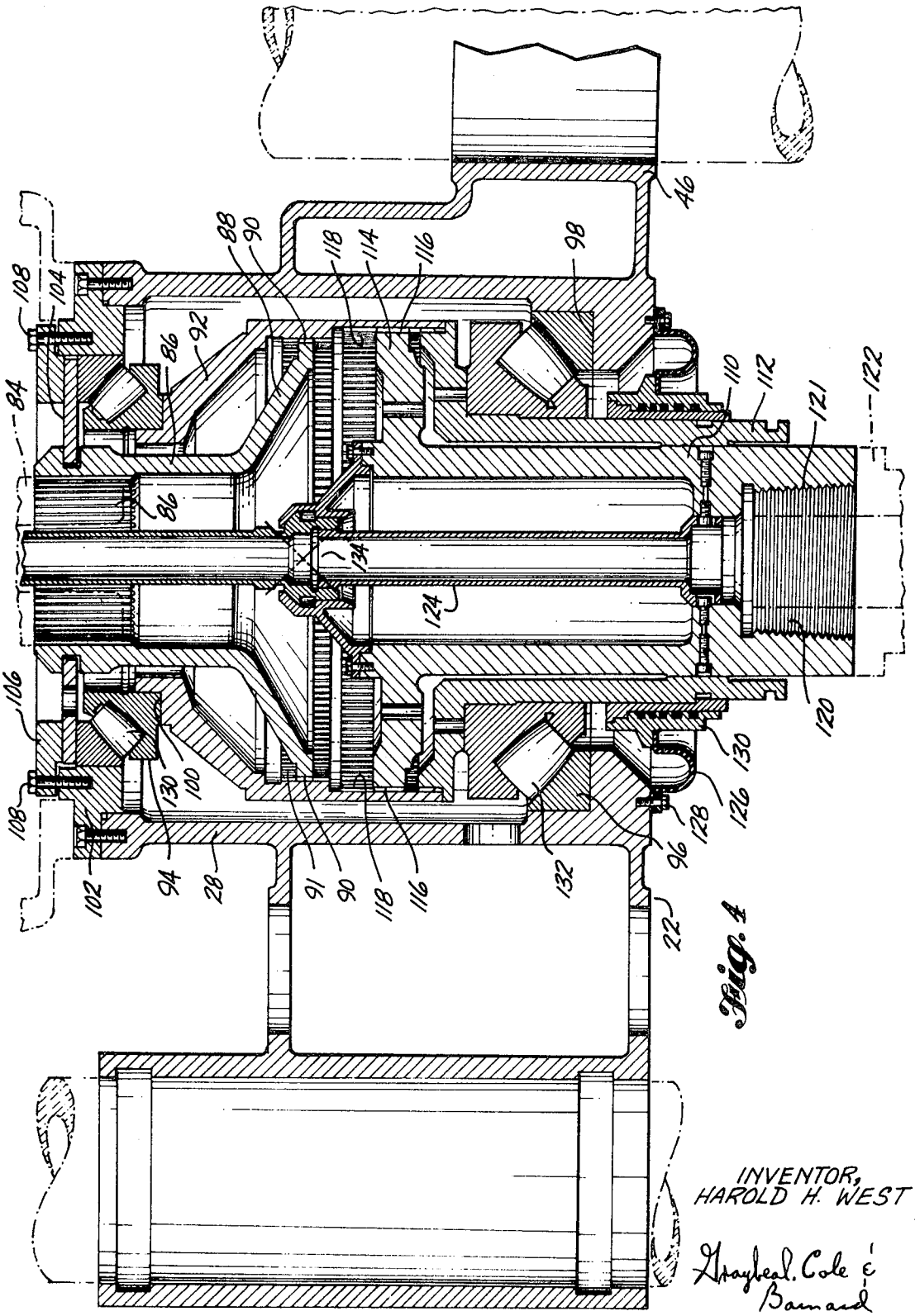

Fig. 4

INVENTOR,
HAROLD H. WEST

Graybeal, Cole & Barnard
ATTORNEYS

HIGH TORQUE BORING MACHINE

BACKGROUND OF THE INVENTION

1. Field of the Invention

The present invention relates to earth boring or drilling machines. It particularly relates to means for isolating bending forces imposed on the drill stem from certain drive gearing.

2. Description of the Prior Art

The present invention relates to an earth boring or drilling machine of the same basic type as disclosed in U.S. Pat. No. 3,220,494, granted on Nov. 30, 1965 to Robert E. Cannon et al., in U.S. Pat. No. 3,454,114, granted July 8, 1969 to Leland B. Poage, in U.S. Pat. No. 3,490,546, granted Jan. 20, 1970 to John S. Hattrup et al., in U.S. Pat. No. 3,463,247, granted Aug. 26, 1969 to Harold T. Klein, and in U.S. Pat. No. 3,554,298, granted Jan. 12, 1971 to Harold T. Klein.

Like the machines disclosed by these patents the machine of the present invention is a precision earth drilling machine which includes rotary drilling equipment mounted for precision movement up and down along base supported guide column means by a traveling cross frame which is hydraulically raised and lowered.

The aforementioned U.S. Pat. No. 3,490,546 discloses a drill head which is constructed to include a universal joint, composed of mating spherical segments, for isolating bending forces imposed on the drill stem from a planetary form of speed reduction gearing. U.S. Pat. No. 2,972,388 discloses a two part drill head in which the two parts are connected together by a universal coupling of a knuckle joint type which also serves to isolate gearing from bending forces.

SUMMARY OF THE INVENTION

Drilling machines according to the present invention comprise motor and gearing components for imparting rotation to a drill head. These components and the drill head are carried by a traveling cross frame which is mounted for precision movement up and down along upstanding guide columns, and is so moved by hydraulic thrust rams or linear motors, or the like.

According to the invention, the drilling equipment includes a bearing arrangement for the drill head which is designed to carry both axial and bending loads, and is adapted to isolate drive gearing for the drill head from bending forces which are developed in the drill pipe during certain phases of the drilling operation. Two axially spaced combination bearings (i.e., bearings which carry both axial and radial loads) support the drive head. These bearings both have spherically surfaced roller elements, the outer curvature of which falls on a common circle so that the drill head and the bearing races secured thereto can tilt about a center. The need for a pivot joint in addition to radial and thrust bearings is eliminated, resulting in a length saving at the drill head region. This length saving is benefited and is utilized in the machine of this invention.

BRIEF DESCRIPTION OF THE DRAWING

In the drawing like letters and numerals refer to like parts, and:

FIG. 1 is an isometric view taken from above and looking towards one side and the front of a drilling machine constructed according to the present invention, showing the rotary drive apparatus in a partially raised position;

FIG. 2 is a view like FIG. 1, but showing the rotary drive apparatus in a lowered position;

FIG. 3 is a fragmentary front elevational view of the rotary drilling apparatus, partially in section; and

FIG. 4 is a fragmentary side elevational view taken through the drive head assembly.

DESCRIPTION OF THE PREFERRED EMBODIMENTS

Referring more specifically to the several figures of the drawing, the illustrated embodiment is shown to comprise a lower or base frame assembly **10** including a base plate member **12** and a generally U-shaped (in plan) main frame **14** upstanding from the plate member **12.** Frame **14** includes upstanding wall portions forming a pair of sockets **16** which occupy near corner positions on the plate member **12.** The lower end portions of a pair of parallel guide columns **18** are received in the sockets **16** and are rigidly secured to the base frame member thereby. A fixed upper cross frame member **20** rigidly interconnects the upper ends of the guide columns **18.** The base frame assembly **10** and the upper cross frame **20** together constitute "main frame means" in the illustrated embodiment.

The guide columns **18** support and guide a movable or traveling cross frame **22.** Traveling cross frame **22** includes vertically spaced apart upper and lower guide sleeves **24, 26** which surroundingly engage the columns **18.** A lower portion of the traveling cross frame **22** extends laterally from the sleeves **26** into a position over the base frame assembly **10.** It includes wall means **28** forming a housing for a bearing assembly (FIG. 4). A second housing **30** extends laterally from the upper guide sleeves **26** into a position above the housing **28.** Housings **28, 30,** sleeves **24, 26** and the interconnecting parts of traveling cross frame **22** are structurally integrated into a single rigid frame assembly.

The upper housing **30** contains collector gearing **32** (FIG. 3) having a pair of input gears **34** and a single output gear **36.**

A pair of drive motor assemblies are bolted to the housing **30** and each has an output shaft which is coupled to one of the inner gears **34,** as will hereinafter be explained in greater detail.

In preferred form the motor assemblies comprise an electric motor **38** and a planetary type reduction transmission **40,** such as the type shown by FIG. 7 of the aforementioned U.S. Pat. No. 3,454,114.

Traveling cross frame **22** is raised and lowered by a plurality of thrust rams **41.** According to the invention, each thrust ram **41** comprises a hollow piston chamber or "cylinder" designated **42,** and a piston comprising a rod **44** and a head **45.** In the illustrated embodiment the closed ends of the piston housings **42** are directed upwardly and the open ends are directed downwardly. Mounting sockets **46** of split form receive the lower end portions of the housings **42** and firmly secure them to the traveling cross frame **22** (FIG. 3). Piston rods **44** include lower end mounting portions **48** which are secured to the lower frame **10.** The mounting portions **48** are received between vertical plate portions of the frame member **14** and are secured to such plate portions by transverse mounting pins **50.** The thrust rams **41** are essentially identical to the thrust rams shown by the aforementioned U.S. Pat. No. 3,454,114. Accordingly, further details of these thrust rams **41,** including the means for supplying and exhausting a motive fluid

to and from them, will not be specifically described herein. Rather, reference is made to U.S. Pat. No. 3,454,114, the contents of which are expressly incorporated herein by this reference.

As best shown by FIGS. **1** and **2**, the guide columns **18** and two of the thrust rams **41** are spaced apart in a quadrangular pattern, with the guide columns **18** being relatively close to corner portions of the base frame assembly **10** on one side of such base frame **10** and the two thrust rams **41** being in the corner portions on the other side of base frame assembly **10**. The third thrust ram **41** is located generally between the guide columns **18** and forms a triangular pattern with the other two thrust rams **41**. The drilling axis is located substantially at the center of forces within the triangle. The upper ends of the cylinders **42** are interconnected by a generally triangular shaped traveling head frame **52**.

Herein the term "jack means" is sometimes used to describe the thrust ram assemblies **41**. Indeed, the double acting linear hydraulic motors **41** are a type of "jack means." It is recognized that the "jack means" could possibly take other forms in other installations (e.g., as a mechanical screw).

Reference is now made to FIG. **3** of the drawing. In this figure, and in other figures as well, the motor is designated **38** and the speed reduction gearing is generally designated **40**. Each motor-gear reduction assembly **38, 40** is in the form of an elongated vertical column which is substantially parallel to the guide columns **18** and the thrust rams **41**.

The lower portion of each transmission main shaft **54** is spline connected at **56** to a tubular extension **58**. A combined bearing **60** is located within the lower portion **62** of drive box **64** in surrounding relationship to the upper end of the tubular extension **58**. An annular retaining flange **66**, connected to the drive box member **62** by a plurality of machine bolts (not shown) serves to hold the bearing **60** in place.

The extension **58** is located within a housing part which is bolted at its upper end to the gear box part **62** and at its lower end to the collector gearing housing **30**. The bolts securing the housing part **68** to housing **30** are designated **70** in FIGS. **1** and **2**. In the same figures the bolts which secure the lower mounting flange of the housing **30** to the housing **28** are designated **72**.

Referring specifically to FIG. **3**, the extension **58** includes internal axial splines which mate with external splines on the upper end portion of a shaft **74** which mounts pinion gears **34** for rotation. Each gear member **34** is annular in form and is spline connected to the shaft **74**. The upper end of each shaft **74** is contained within a combination bearing unit **76** and the lower end portion of each shaft **74** is contained within a similar lower combination bearing **78**.

Upper and lower combination bearings **80, 82** serve to mount a central shaft **84** to which the gear **36** is secured, such as by splines. The lower end portion of shaft **84** extends through a bottom opening in housing **30** and downwardly below such housing **30** and includes external splines **86**. The splined lower end portion of shaft **84** extends into an upstanding tubular drive member **86** (FIG. **4**). This drive member **86** includes an enlarged diameter lower end portion **88** which carries peripheral splines **90**. This splined lower end portion **88** of member **86** is contained within a larger diameter tubular drive member **92**. Drive member **92** is shown to be of composite construction, and to comprise upper and lower parts, each of which includes a reduced diameter end portion. The upper end portion of the upper part of member **92** is contained within a combination bearing **94**. The lower end portion of the lower part of member **162** is contained within a larger combination bearing **96**. A socket **98** is formed in the lower portion of housing **28** to receive the bearing **96**. Bearing **94** is supported on a shoulder **100** formed at the upper end of member **92**, and is radially outwardly bounded by an annular member **102**. An annular disc like seal member **104** is secured between the upper surface of bearing **94** and an annular retaining flange **106** which is secured to member **102** by bolts **108**. The seal member **106** makes loose contact with the upper end portion of drive member **86** so that relative movement can occur between the two. A main drive head **110** extends axially through the tubular lower portion **112** of drive member **92**. Drive head **110** includes an enlarged diameter upper end portion **114** on the outer periphery of which are formed axial splines **116**. The splines **116** mate with a set of longer axial splines **118** formed on the inside wall of the intermediate drive member **92**. The splines **116, 118** couple the drive head **110** and the drive member **92** together for conjoint rotation, but permit a limited amount of axial movement of the drive head **110** relative to the drive member **92**.

The lower end portion of the drill head **110** includes a tool joint component, shown in the form of an interiorly threaded socket or box **120**. A complementary pin type tool joint component **121** of an upper section of drill pipe **122** is thread connected to the tool joint component **120**. A tubular center shaft **124** extends from a lower portion of drive head **110**, upwardly through the hollow interior of drive head **110**, then through the hollow interior of drive member **86**, then through the hollow interior of gear shaft **84**, and then upwardly through space to a connection with the lower portion of a fluid transmitting swivel coupler (not shown) positioned below top frame member **52**. The upper portion of the fluid coupler is connected to a source of drilling fluid which is delivered downwardly through the coupler and the tubular shaft **124** to the hollow interior of the drill pipe. The upper portion of the swivel coupler **126** is also connected to a piston rod (not shown) which projects upwardly into a cylinder **128** (FIGS. **1** and **2**) located on top of frame member **52**. The cylinder **128** is a part of a double acting linear hydraulic motor provided for balancing the weight of the drill stem and the drive head **110**. This balancing feature is covered in detail in a copending application Ser. No. 75,020, filed Sept. 24, 1970, entitled Earth Drilling Machine and now U.S. Pat. No. 3,695,364, and assigned to the assignee of this application.

Referring specifically to FIG. **4**, the combination bearings **94, 96** contain tapered roller elements **130, 132**, respectively. The elements **130, 132** are longitudinally curved. The curvature is the same for all elements **130, 132** and falls on an imaginary circle having its center approximately at **134**. Owing to this arrangement, at least the major bending forces transmitted to drive head **110** by the drill stem are not transmitted up to the central drive gear **36**. Instead, the bending forces merely cause the drive head **110** and the drive member **92**, to which it is spline connected, to rotate sideways slightly about the center **124**. The splines **90** are short enough and enough clearance exists where they mate

with splines **91** so that the drive member **86** tilts very little or not at all upon tilting movement of drive head **110** in drive member **92.** Thus, in effect a "hinge" joint exists between drive members **88, 92** which is incapable of transmitting bending forces.

A flexible wall seal member **126** is secured to a lower portion of the traveling cross frame **22,** such as by a plurality of bolts **128,** and is also secured to an annular sleeve **130** which surrounds the lower portion **112** of drive member **92.**

It is to be understood that in most respects the illustrated embodiment is merely one example of many possible hardware forms of the invention, and it is the following claims rather than the drawing and description relating thereto which are to be used for defining and limiting the invention.

What is claimed is:

1. In a drilling mechanism comprising upstanding guide column means, traveling cross frame means mounted for precision up and down travel along said column means, and drilling equipment carried by said traveling cross frame means and including a rotary drill head connectible to drill pipe, motor means and drive transmission means drivingly connecting said motor means to said drill head, the improvement characterized by:

said drill head comprising means mounting it on the traveling cross frame means, including bearing means for carrying both axial and radial loads, said bearing means also serving to mount the drive head for limited pivotal movement relative to said traveling cross frame means so that the drive head can tilt sideways in response to bending forces imposed by the drill pipe;

said drive transmission means including a drive member, and means interconnecting said drive member and said drill head for rotary motion transmission from the former to the latter, said means being capable of transmitting very little or none of the sideways tilting movement of the drill head to said drive member.

2. The drilling mechanism improvement of claim **1,** wherein said bearing means comprises vertically spaced apart upper and lower bearing assemblies, each having fixed and rotatable bearing races, said bearing races having spherically curved race surfaces with one race surface of each bearing facing inwardly towards a center of curvature which is substantially common with the inwardly facing race of the other bearing, with said bearing races serving to mount the drive head for limited pivotal movement substantially about said center of curvature.

3. The drilling mechanism improvement of claim **2,** further comprising a plurality of roller elements between said races, said roller elements being longitudinally curved, and of a curvature and attitude to mate with said race surfaces.

4. The drilling mechanism improvement of claim **1,** wherein said drill head includes an outer portion supported by said bearing means and an inner portion mounted for limited axial movement relative to said outer portion but coupled thereto for conjoint rotation therewith, said inner portion carrying a tool joint component connectible to a complementary tool joint component on a drill pipe member.

5. The drilling mechanism improvement of claim **4,** wherein said drive member includes a portion which projects into the outer portion of said drive head, and connection means between said drive member portion and said drive head outer portion serving to couple them together for conjoint rotation, but permitting said drive head outer member to tilt relative to said drive member portion.

6. The drilling mechanism improvement of claim **5,** wherein said bearing means comprises vertically spaced apart upper and lower bearing assemblies, each having fixed and rotatable bearing races, said bearing races having spherically curved race surfaces with one race surface of each bearing facing inwardly towards a center of curvature which is substantially common with the inwardly facing race of the other bearing, with said bearing races serving to mount the drive head for limited pivotal movement substantially about said center of curvature.

7. The drilling mechanism improvement of claim **6,** further comprising a plurality of roller elements between said races, said roller elements being longitudinally curved, and of a curvature and attitude to mate with said race surfaces.

* * * * *