United States Patent [19]

Schultz

[11] **3,727,611**

[45] **Apr. 17, 1973**

[54] **ALIGNMENT MEANS FOR INSERTING GUIDE WIRE PRIOR TO INSERTING HIP NAIL FOR A FRACTURED HIP**

[76] Inventor: **Robert Jordan Schultz,** 64 Little Brook Road, Wilton, Conn. 06897

[22] Filed: **July 1, 1971**

[21] Appl. No.: **158,808**

[52] **U.S. Cl.** ..... **128/92 EB**
[51] **Int. Cl.** **A61f 5/04**
[58] **Field of Search** ..... 128/92 EB, 92 EA, 128/92 E, 92 R, 92 B, 92 BA, 92 BB, 92 BC

[56] **References Cited**

UNITED STATES PATENTS

2,531,734	11/1950	Hopkins	128/92 BA
2,607,339	8/1952	Price	128/92 EB
2,536,963	1/1951	Stephens	128/92 EB
2,200,120	5/1940	Nauth	128/92 EB
2,362,957	11/1944	Hackett	128/92 EA

OTHER PUBLICATIONS

"Goodwin Bone Clamp with Drill Guide", J. R. Siebrandt Manufacturing Co. Catalogue, Published July, 1939

"Key Dual Bone Plate Outfit", Zimmer Mfg. Co. Catalogue Feb. 1, 1947, p. 32.

"Trochanteric Fractures of the Femur", Journal of Bone & Joint Surgery, Vol. 31B, No. 2, May 1959, P. 201, FIGS. 20–23.

Primary Examiner—Richard A. Gaudet
Assistant Examiner—J. Yasko
Attorney—James M. Heilman

[57] **ABSTRACT**

The alignment means includes three novel structures for correctly placing a hip nail in the rounded head of the femur for fracture of the hip. In the use of these structures, a new method of inserting a guide wire in a bone is disclosed. One of the aids is a specially prepared side plate attached to the movable arm of a modified Lowman clamp which is used to designate the correct position for drilling an entrance hole in the lateral cortex of the femur to accommodate the nail and guide wire. Another aid is a wire guide which directs the exploratory wire across the fractured area. The guide wire is used to direct the nail to its best supporting position, and the third is the use of the lesser trochanter as the reference point for the attachment or contact of the instrument, so that the instrument may be used and the procedure performed.

11 Claims, 11 Drawing Figures

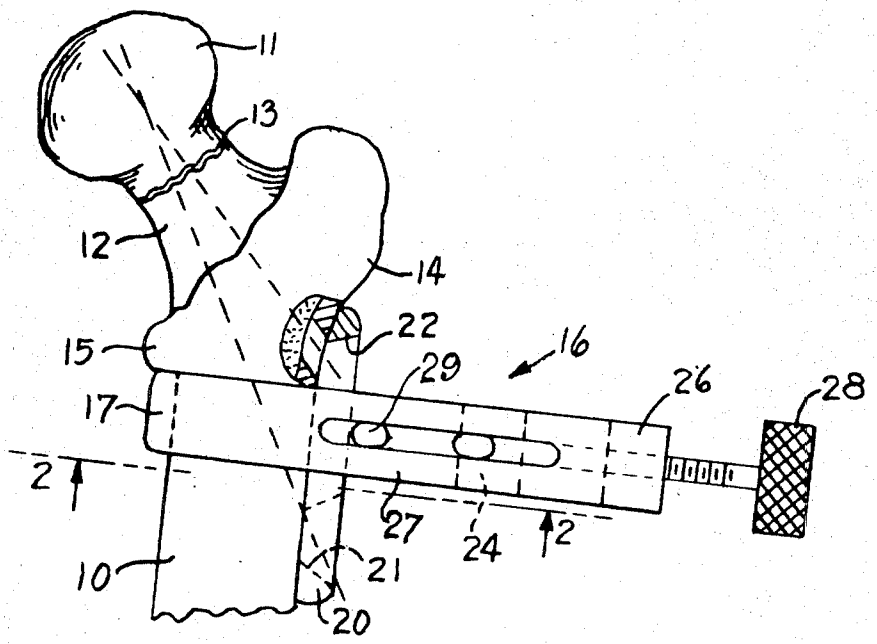

FIG. 1

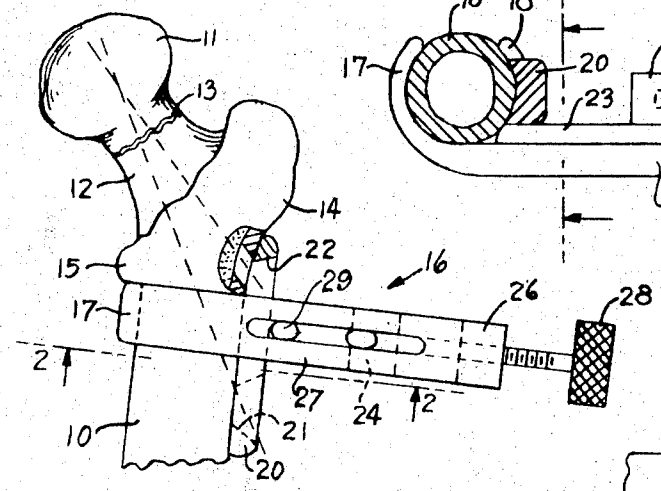

FIG. 2

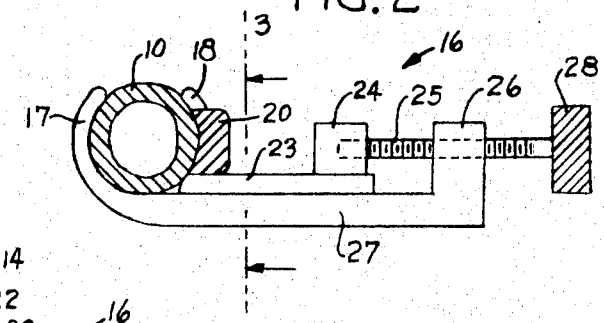

FIG. 3

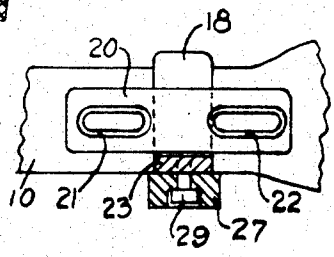

FIG. 4

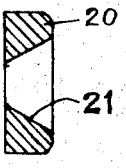

FIG. 5

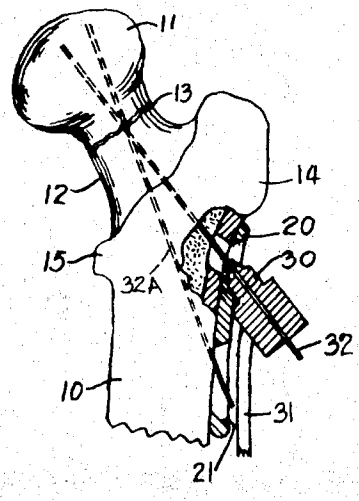

FIG. 6

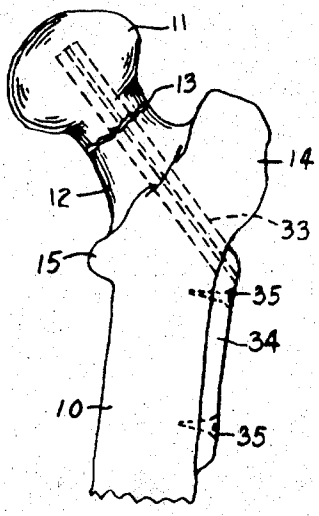

FIG. 7

ROBERT J. SCHULTZ
INVENTOR

BY James R. Heilman
ATTORNEY

FIG. 8

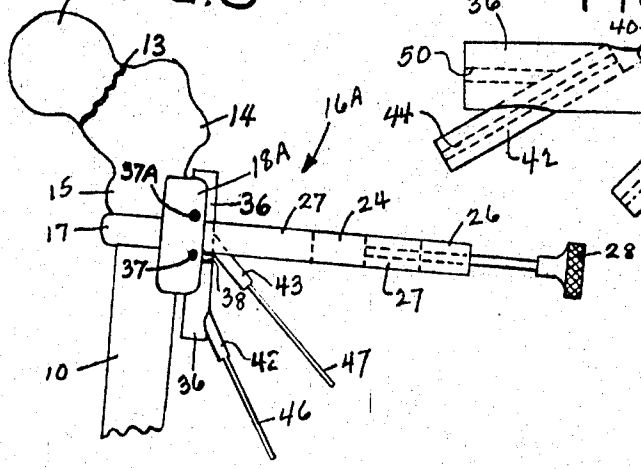

FIG. 9

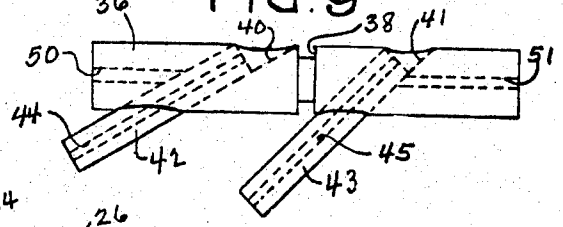

FIG. 10

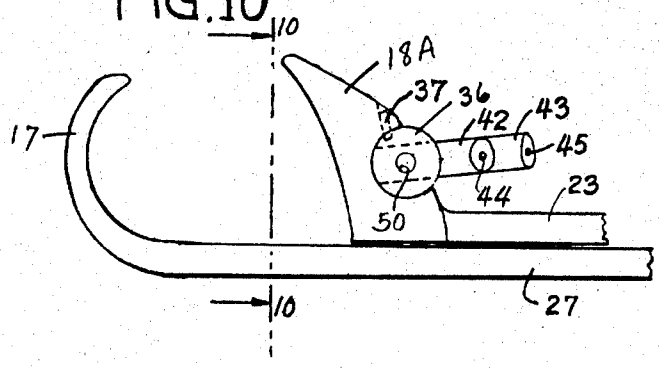

FIG. 11

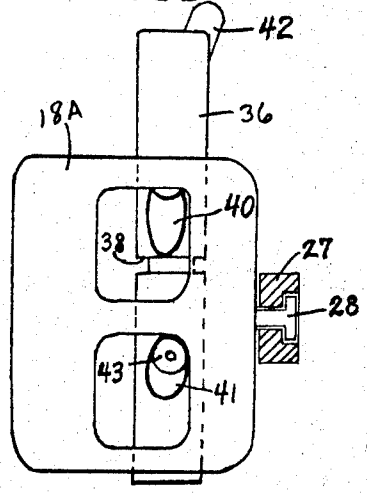

ROBERT J. SCHULTZ
INVENTOR
BY James R. Heilman
ATTORNEY

ALIGNMENT MEANS FOR INSERTING GUIDE WIRE PRIOR TO INSERTING HIP NAIL FOR A FRACTURED HIP

BACKGROUND OF THE INVENTION

The alignment of a metal support nail has always been a problem, especially when the nail used to connect the upper rounded head of the femur bone to the main shaft is of one piece construction with a fixed angle side plate. The surgeon first makes a rough measurement from a large bony prominence of the upper femur (the flare of the greater trochanter) to a point approximately three-quarters to about 1 inch distal on the lateral shaft. Then a hole is drilled through the hard bone cortex of the lateral shaft, following which two to three guide wires are inserted into the hole in varying directions through the soft bone marrow into the neck and head of the femur in an attempt to find the best position for the surgical nail.

X-rays are next taken to determine if any of the wires are in the correct position, and to determine the length of the "nail". If none are correctly placed, the guide wires are removed and reinserted. More X-rays are taken and when the correct position of a guide wire is found, a hip nail with a guide hole in the center is inserted into the bone, guided by the wire which is present in the hollow portion of the nail. Once the hip nail is securely seated, the guide wire is removed, and the side plate portion of the nail is secured to the bone shaft. The above program takes time, often requiring many X-ray pictures. Also, the use of the greater trochanter presents a large irregular prominence from which precise repeatable starting points are difficult to determine and thus multiple points are obtained along the lateral shaft for the starting hole, leading to varying angles in which the nail may be inserted. This then precludes the use of nails, with rigid fixed angle side plates or requires the hospital to have large inventory of nails and side plates of varying angles.

The present invention uses the lesser trochanter as a reference point, to which a clamp is placed in contact, such that the side plate of the instrument allows the surgeon to position and drill the first hole accurately. After the hole is bored, a hollow wire guide, having the correct angle either at 45° for a 135° nail or 30° for a 150° nail, or any angle desired by the surgeon is set into the side plate of the instrument. A guide wire is then inserted into the bone being pushed through the hollow position of the wire guide into the neck and head of the femur at the fixed angle. Although the angle in the AP (frontal) plane is fixed, the side plate allows for variation in the setting in the lateral (sagittal) plane, and thus allows for variation in the anteversion or retroversion of the head or neck. Once the guide wire is in the proper position, the small wire guide and entire instrument are removed and the hip nail inserted using the guide wire in the usual manner.

One of the features of the present invention is the use of a clamp a section of which comes in contact with the lesser trochanter to position the instrument, and a side plate which permits a hole to be drilled into the lateral cortex of the femur so that the guide wire and hip nail are accurately placed.

Another feature of the invention is the use of a wire guide to position the nail properly with the correct angle for a proper fit at 135° and 150° for fixed angle nails or at any other angle for special angle nails as the surgeon desires. Another feature allows for ready correction of mistakes in inserting the nail in the lateral (sagittal) plane as only one variable is now present. Furthermore, it allows for the insertion of only one guide wire, thus increasing speed and reducing confusion when reading the X-rays.

For a better understanding of the present invention, together with other details and features thereof, reference is made to the following description taken in connection with the accompanying drawings.

BRIEF DESCRIPTION OF THE FIGURES

FIG. **1** is a side view of the upper portion of a femur with specially prepared side plate and modified Lowman clamp secured to the bone, the clamp being in contact with the lesser trochanter **15**.

FIG. **2** is a cross sectional view of the clamp taken along line **2—2** of FIG. **1**.

FIG. **3** is a cross sectional view of the clamp shown in FIG. **2** and is taken along line **3—3** of that figure.

FIG. **4** is a cross sectional view of the side plate.

FIG **5** is a side view, with parts in section, of the bone with a guide wire and wire guide in place for 135° fixed angle nail.

FIG. **6** is a side view of the bone with the 135° fixed angle nail in place.

FIG. **7** is a cross sectional view of the nail.

FIG. **8** is a side view of an alternate form of clamp having a rotating cylinder secured to the specially prepared side plate attached to the movable jaw.

FIG. **9** is a detailed view of the rotating cylinder, removed from the clamp containing the angle guide for guide wire.

FIG. **10** is a side view of the clamp and side plate which includes the rotating cylinder, and angle guide for guide wire.

FIG. **11** is a cross sectional view of the specially prepared side plate, rotating cylinder and angle guide for guide wire shown in FIG. **10** and is taken along line **10—10** of that figure.

DESCRIPTION OF THE PREFERRED EMBODIMENT

Referring now to FIGS. **1**, **2**, and **3**, a femur bone **10** is shown with an upper rounded portion (head of femur) **11**, forming part of a ball and socket joint with the hip joint (acetabulum of the pelvis). The rounded portion is connected to the main shank portion (shaft of femur) by bone shaft **12** of lesser diameter (neck of the femur) where a fracture **13** can take place. Fractures may also take place in the intertrochanteric and subtrochanteric regions. The neck **12** is connected to the shaft of the femur which includes several prominences for the attachment of muscles. The greater trochanter **14** is superior to the shaft **12** while the lesser trochanter **15** is just below the neck of the femur and postermedial on the shaft. The greater trochanter **14** is a large rounded knob, the size of which provides too much variation for an exact reference point from which to start measurements. The lesser trochanter **15** is smaller but has a definite base line which forms a good reference point.

The fixed arm of the instrument **16** is placed anteriorly around the proximal shaft of the femur **10**, such

that the fixed arm **17** is positioned on the medial side of the bone and placed in contact with the interior edge of the lesser trochanter. The movable arm **18** has a specially prepared side plate **20** with two reference holes **21** and **22**. Jaw **18** is secured to a slide **23**, having an extension **24**, which forms a socket for the end of a clamping screw **25**. Screw **25** meshes with a thread cut in another extension **26** which is part of the base **27**. A knurled head **28** is secured to the end of screw **25** for manual operation. The slide **23** is secured to the base **27** by means of one or more bolts **29**, permitting relative movement.

The clamp shown in the drawings is an improved modified Lohman clamp since it is convenient to add a cross plate to such a structure. Other types of clamps can be used including clamps that are retained in place by resilient means.

When the clamp is in place, the side plate comes in contact with the lateral cortex of the proximal of the femur so that a hole may be drilled through the solid bone shell in either of the positions designated by holes **21** or **22** in the cross plate **20**. If a nail having an angular separation of nail-to-flange of 135° is to be used, the upper hole **22** serves as a pattern. If the angular separation is 150°, the lower hole **21** is used. These will be reversed when the instrument is placed on the opposite extremity. The dotted lines shown in FIG. **1** indicate the two directions taken by the two nails. In FIG. **6** a nail having a 135° angle is the one used.

Prior to the hole being drilled into the bone, a wire guide **30** of either 135° or 150° is pressed into the hole **21** or **22**, through which the lateral cortex may now be drilled. The wire guide is shown in FIG. **5** and comprises a short hollow metal cylinder **30** secured to a handle **31** and may come in angles of 135° and 150° or any angle the surgeon desires. Once the hole in the cortex Is drilled, the wire guide **30** is held in place so that a guide wire **32** may be placed through the hole in the guide **30** and inserted into the neck and head of the femur. The wire guide is only about 1 inch long but the guide wire **32** is entered for the full distance, past the fracture, and into the rounded portion (head of femur **11**). The guide **30** is now removed, leaving the guide pin **32** in place.

X-rays are then taken to note the position of the guide wire. If this is satisfactory, the clamp **16** is then removed leaving the guide wire. If not, the guide wire is removed and replaced again as previously described with the necessary anteversion or retroversion correction. Next, the nail **33** (See FIG. **6**) is placed over the guide wire **32** and driven into place as shown in the figure. The nail **33** has an outer flange **34** with multiple chamfered screw holes, however, it may come in various shapes. Screws **35** are employed to securely anchor the flange to the bone. Then the guide wire **32** is removed and the operation on the bone is complete.

If the nail is to have an angle of **150** degrees, the wire guide **30** is positioned in hole **21** and the guide wire **32A** positioned as shown in FIG. **5**. The invention is not limited to nails having angles of 135° and 150°. Any nail angle may be used with appropriate change in the clamp.

The alternate form of the invention is shown in FIGS. **8** through **11**. A clamp **16A** is used, made with a thick movable jaw **18A** which has two square holes and a receptacle for a rotatable cylinder **36**. This cylinder is inserted into place by fitting it into its receptacle in the modified side plate **18A**, in such a way that it can be reversed to use for either the right or left femur. The rotating cylinder **36** is held in place by a small set screw **37** which fits into an annular groove **38** in the cylinder **36**. Two angular holes **40** and **41** are drilled into cylinder **36** at different angles and guide cylinders **42** and **43** are placed in holes **40** and **42** as shown in FIGS. **8** and **9**. Each guide cylinder **42, 43** is formed with an axial hole **44, 45** for directing guide wires **46, 47** (FIG. **8**) into the bone and to accurately place the starting hole in the lateral cortex of the femur. When the guide cylinders are in place, they may be secured by set screws which are threaded into axial holes **50, 51** in the cylinder **36**.

FIGS. **1, 5, 6** and **8** show a left femur and the guide instrument shown as used on the left side, with the jaw openings facing the rear (posterior) of the body. If the fracture is on the right side, the clamp is turned upside down with the rotating cylinder reversed and the jaw opening still at the back. The clamp **16** may be turned around and used on the right side without any adjustments. However, in the clamp shown in FIGS. **8** through **11**, the cylinder **36** must be removed, turned end-for-end and inserted into the clamp jaw again, and this time clamped in place by a second set screw **37A**.

The operation of clamp **16A** is as follows: The clamp is first secured to the bone as shown in FIG. **8**. The fixed flange **17** is placed against the lesser trochanter. The rotating cylinder **36** is preset to accommodate the proper amount of neck shaft anteversion or left released if the guide wire is to be inserted free hand into the bone. A decision is made as to which angle the nail is to be inserted, i.e., either 135°, 150°, or any angle the surgeon desires, If the smaller angle is desired, guide cylinder **43** is placed in the superior hole, following which a drill is inserted into the hole and a hole is drilled through the outer shell (cortex) of the bone. A guide wire **47** is then placed into guide cylinder **43** and inserted into the bone until it has moved past the fracture into the head of the femur.

X-rays are taken to determine the proper position of the guide wire. If it is satisfactory, the guide cylinder and the clamp **16A** are removed, leaving the guide wire in place. The bone is now ready for the nail **33** (See FIG. **7**). The hollow nail is placed over the guide wire, pushed into place, secured by screws **34** and the guide wire is removed. If not satisfactory, the guide wire is removed, the necessary correction made, and the guide wire reinserted as set forth above.

The above description relates to the apparatus and method of properly aligning a nail to perform internal fixation for the healing of a fracture of the hip. While this method could possibly be used without taking X-ray pictures, it is assumed that the surgeon will take several X-ray pictures to be sure that the guide wire and nail are properly placed.

For a more complete understanding and a clearer picture of applicant's device and its use, actual size of the various elements, etc., there is attached hereto and made a part hereof Exhibit A comprising eight photographs showing the actual constructed and working device.

The embodiments of the invention in which an exclusive property or privilege is claimed are defined as follows:

1. An alignment means for inserting a metal guide wire into the head and neck of the femur comprising: a clamp including a first jaw for limiting against the lesser trochanter having a spacial relationship with the angle formed by the junction of the neck and shaft, and a second jaw slideably secured to said first jaw for securing the clamp to a portion of the bone, said second jaw fitted with an alignment hole indicating a starting position for a nail; the hole limiting motion in the anterior position (frontal) plane but allowing for motion in the lateral (sagittal) position a guiding wire, for insertion into the alignment hole into the bone and across the fracture at a predetermined angle and position, said guide wire forming a pilot means for inserting the nail after the wire guide has been removed.

2. An alignment means as claimed in claim 1 wherein two alignment holes are formed in the second jaw for indicating starting positions for either one of two nails, said nails having differing angles between the nail flange and the insertion portion.

3. An alignment means as claimed in claim 2 wherein one alignment hole is for a wire guide and nail having an angular separation between nail and flange of 135°.

4. An alignment means as claimed in claim 2 wherein a second alignment hole is for a wire guide and nail having an angular separation between nail and flange of 150°.

5. An alignment means for inserting a metal nail into the head and neck of the femur comprising: a clamp including a first jaw for limiting against the lesser trochanter, a second jaw for securing the clamp to a portion of the bone; and a rockable cylinder supported in a cylindrical recess in said second jaw, said cylinder formed with an alignment hole; a guide wire for insertion through said hole into the bone to thereby indicate a starting position and an angular direction in all planes across the fracture, said guide wire forming a pilot means for inserting the metal nail after the clamp has been removed.

6. An alignment means as claimed in claim 5 wherein said rockable cylinder is formed with two holes for supporting either one of two guide wires, said two holes disposed at differing angles to the bone axis.

7. An alignment means as claimed in claim 6 wherein the holes for supporting the guide wires are disposed at angles of 135° and 150° respectively from the axis of the bone shaft.

8. An alignment means as claimed in claim 5 wherein a hollow cylindrical wire guide is supported in said rockable cylinder for actually accurately guiding the guide wire.

9. An alignment means as claimed in claim 5 wherein said rockable cylinder is removable and reversible for changing the angular disposition of the guide wire when the clamp is secured to a femur on the other side of the body.

10. An alignment means as claimed in claim 5 wherein said rockable cylinder is secured in position by means of a set screw which limits movement by means of an annular groove cut in the outer surface of the cylinder.

11. The method of aligning a metal nail for insertion into a femur bone for fixation of a malformation such as a fracture or slipped femoral capital epiphysis of the femur comprising: securing a clamp to a portion of the femur shaft with one of the edges of the clamp in engagement with the lesser trochanter; drilling a hole in the bone cortex at a point indicated by a hole in the clamp; inserting a hollow cylindrical wire guide into the hole positioned at a predetermined angle to the bone shaft and permitting accommodation for anteversion, neutral or retroversion of the neck or head; inserting a guide wire into the hollow portion of the wire guide; removing the wire guide and the clamp from the bone; inserting a hollow nail over the guide wire; and then removing the guide wire.

* * * * *