United States Patent [19]

Stockstill

[11] **3,720,230**

[45] **March 13, 1973**

[54] **APPARATUS FOR ADMIXING LIQUIDS IN PREDETERMINED RATIO**

[75] Inventors: **Percy H. Miller; Mehdif Sabbaghian; Calvin A. Stockstill,** all of Baton Rouge, La.

[73] Assignee: **Coronet Manufacturing Company, Inc.,** Baton Rouge, La.

[22] Filed: **April 14, 1971**

[21] Appl. No.: **134,005**

[52] **U.S. Cl.** **137/564.5**
[51] **Int. Cl.** **E03b 7/07**
[58] **Field of Search** 137/564.5, 268

[56] **References Cited**

UNITED STATES PATENTS

3,095,892 7/1963 Laing et al. ..... 137/564.5 X

Primary Examiner—Henry T. Klinksiek
Attorney—Llewellyn A. Proctor

[57] **ABSTRACT**

Apparatus for adding measured quantities of concentrates or solutions, e.g., particularly fluoride salt solutions, to a second liquid, e.g., fresh water as supplied by municipalities to ordinary residences. The apparatus is particularly adapted to be fitted into a conduit carrying a supply of fresh water to a source to be supplied with fluorinated water, e.g., a residence. It is constituted generally of an outer vessel within which a tubular flow nozzle is enclosed. The nozzle is provided with high pressure and low pressure sides, and lateral outlets from such high and low pressure sides. A flexible bag containing, e.g., a fluoride solution for injection into the fresh water, can be operatively connected to the low pressure outlet, while the external portion of the bag is placed under the influence of the high pressure outlet such that when fresh water is passed through the nozzle the differential pressure causes solution to be metered via the low pressure outlet into the axial opening within the tubular flow nozzle where it is picked up, admixed or dissolved within the fresh water, and dispensed through the conduit as fluorinated drinking water.

10 Claims, 2 Drawing Figures

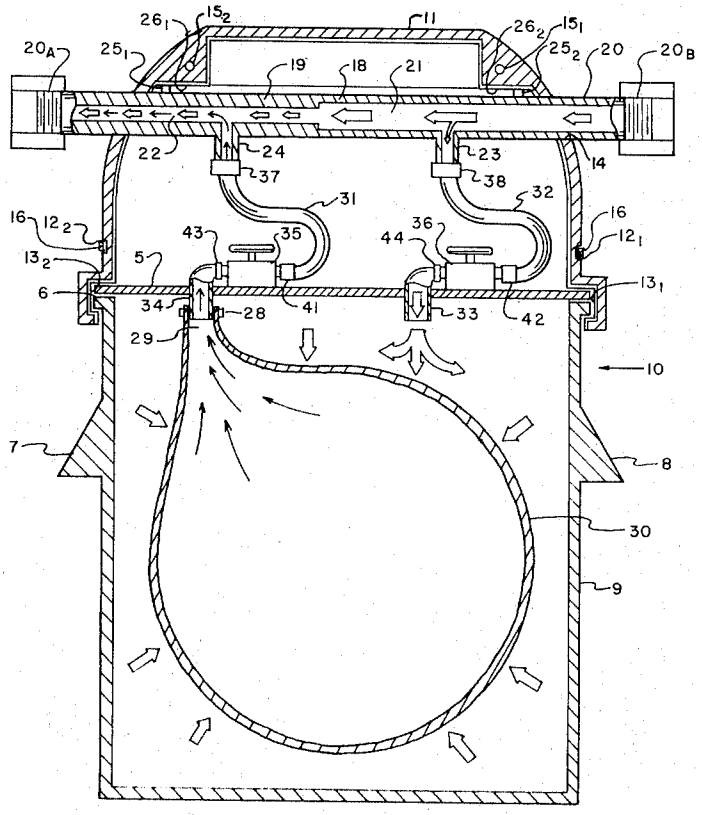

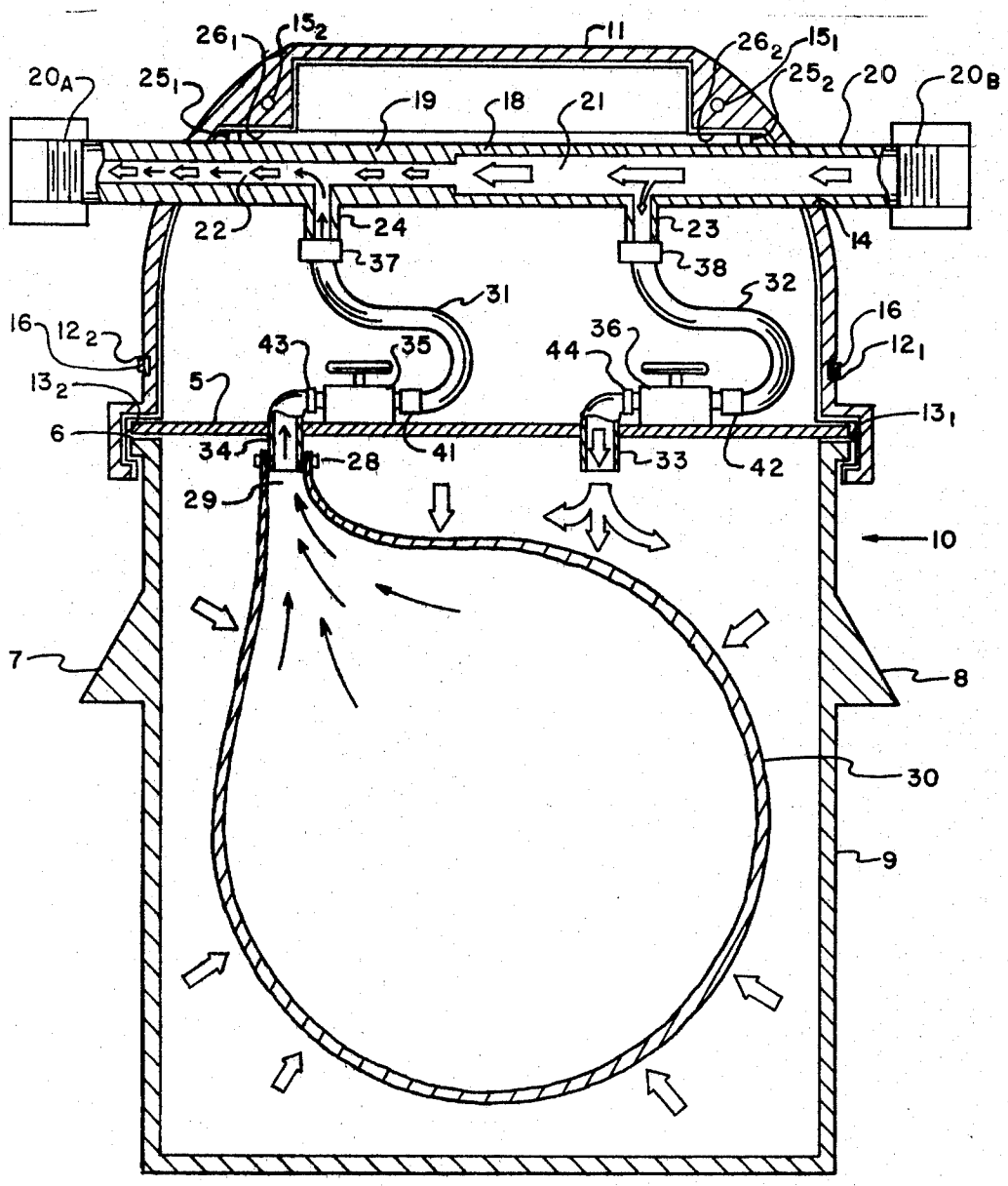

FIGURE I

INVENTOR

CALVIN A. STOCKSTILL

BY

Stewart Ca. Proctor

ATTORNEY

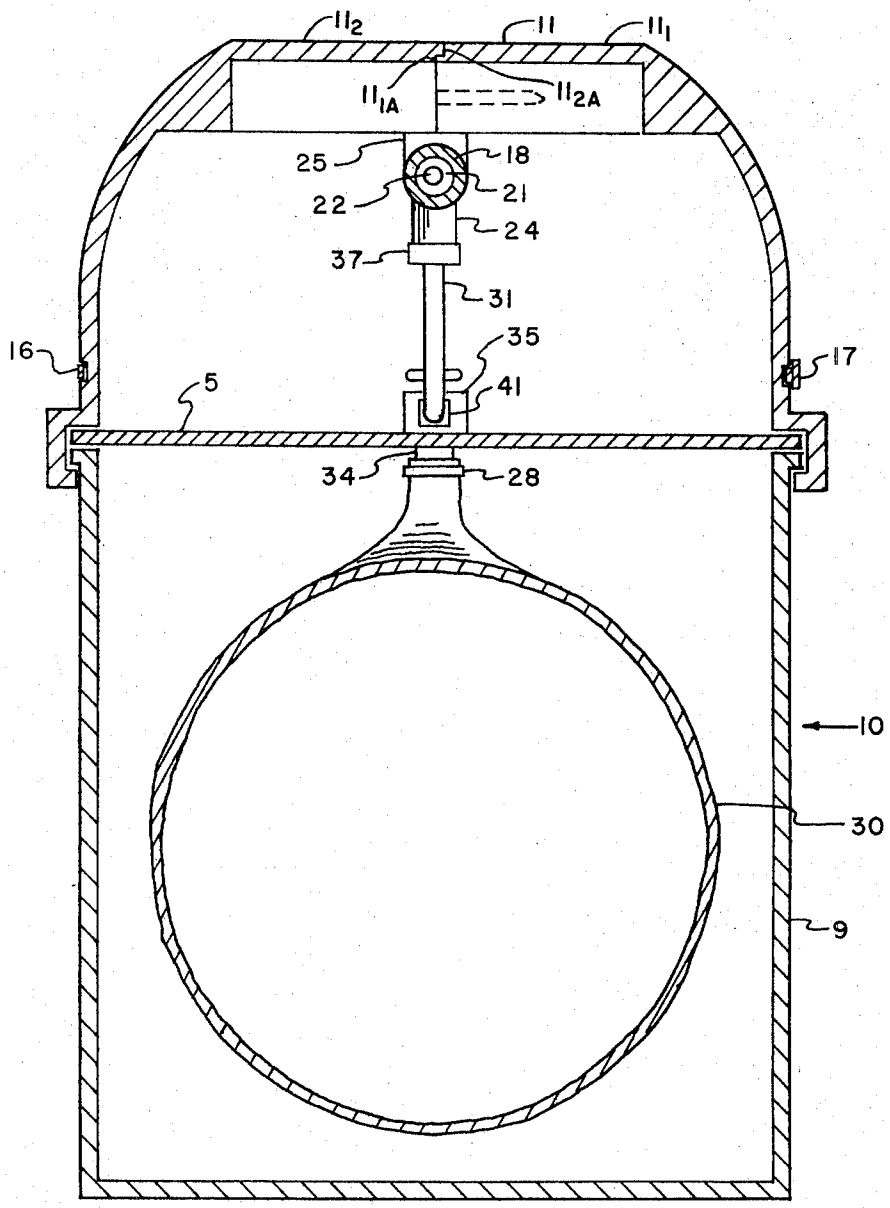

FIGURE II

INVENTOR

CALVIN A. STOCKSTILL

BY

Flewellyn A. Proctor

ATTORNEY

APPARATUS FOR ADMIXING LIQUIDS IN PREDETERMINED RATIO

It is known to employ apparatus of many kinds to dispense concentrates or solutions of various substances, in liquid form, into a second liquid diluent or solution. For example, apparatus of various types are used to dispense fruit juices or sugar syrups, disinfectants, medicinals and the like into a liquid, such as fresh water or carbonated water.

Liquid mixing devices of such types are most often quite complex, and are generally structured to provide means for metering and proportioning the concentrate or solution within a measured amount of diluent. In such devices, the rate of flow of the concentrate, or solution, and the diluent are proportioned one with respect to the other, thoroughly mixed in predetermined ratio, and dispensed.

Apparatus embodied by the present invention provides further improvements over these and prior art devices.

Among the objects of this invention are:

To provide a new and improved apparatus which is capable of mixing liquids in predetermined ratio, one with respect to another and dispensing the mixed liquids with accuracy and precision.

To provide apparatus of simple structure, particularly adaptable for receiving and storing a first liquid concentrate or solution for addition to a second liquid, in predetermined ratios as the mixture of liquids is dispensed on demand.

To provide apparatus particularly adaptable for rapidly metering out a concentrate or solution for addition to a flowing stream, the amount of concentrate or solution added to the stream being directly measured and proportioned in relation to the rate of flow of the flowing stream.

To provide new and durable apparatus of the above-described character for use in addition of concentrates or solutions, particularly fluoride salt solutions, to drinking water as provided by municipalities to individual residences.

These objects and others are achieved in accordance with the present invention which embodies the combination of an outer vessel constituted of a rigid shell, an inner flexible sac or bag with a nozzle outlet, or opening, and a tubular liquid flow nozzle having a high pressure side and a low pressure side with individual outlets, the said outlet of the flexible bag being communicable to the said low pressure side of the said flow nozzle. The axial opening through the flow nozzle is thus provided with a form of restriction to provide a high pressure side and a low pressure side, and lateral outlets are associated with the high pressure side and low pressure side, respectively. The flexible bag is adapted to contain a concentrate, or solution, particularly fluoride salt solution. The nozzle opening of a filled bag can be operatively communicated with, or connected to, the low pressure outlet of the flow nozzle. The external side of the bag, in operation, is in direct communication with the high pressure outlet, and when a stream of fresh water passes through the nozzle it is split, one portion of the stream exerting pressure upon the external peripheral surface of the bag to force water (because of the differential pressure) through the low pressure outlet into the flow nozzle, while the other portion of the stream which passes through the axial opening of the flow nozzle picks up the solution, which is admixed or dissolved therewith, and the mixture dispersed as fluorinated drinking water from the flow nozzle.

The invention, and its principle of operation, will be more fully understood by reference to the following detailed description of a specific and preferred embodiment, and to the attached drawings to which reference is made in the description. In the description, similar whole numbers are used to represent similar parts or components, and when numbers with subscripts are used in common with whole corresponding numbers, the whole numbers are used in the generic sense and subscripts are used where there is a plurality of similar parts or components. Letter subscripts are used to denote a particular part or portion of a component.

In the drawings:

FIG. 1 is a sectional elevation view showing in detail an assembly of the several principal parts of the preferred device for injecting or adding a solution, e.g., a solution of fluoride salt, to drinking water; and

FIG. 2 is an elevation view taken through section 2—2 of the preceding figure, showing in further detail the principal parts of the said device.

Referring to the drawings, the principal parts of the device or apparatus can be characterized generally as an outer vessel **10**, preferably constituted of a lower container portion **9** and an upper enclosing domed cover **11**, conveniently formed in two mating hemi-sections $\mathbf{11_1}$,$\mathbf{11_2}$ of substantially equal size. A liquid flow nozzle **20**, containing a non-uniform diameter axial opening therethrough which provides a high pressure side **21** and a low pressure side **22**, is mounted within the domed cover **11**. Outlets **23**,**24** are connected to the high pressure side **21** and low pressure side **22** of the nozzle **20**, respectively. The inlet portion of a flexible bag **30**, containing a concentrated solution, can be operatively communicated via suitable connections to the low pressure outlet **24** of the nozzle **20** so that the solution within the bag can be dispersed into the nozzle, picked up, admixed with and discharged with a second stream passing through the nozzle. The contents of the bag **30** are discharged through the nozzle **20** in direct response to external pressure exerted on the peripheral external surfaces of the bag by high pressure liquid from outlet **23**.

A container portion **9** of the vessel **10** is of cylindrical shape and is closed at the bottom so that it can contain liquid. Projecting surfaces **7**,**8** with horizontally inclined, downwardly facing bottom surfaces are provided to facilitate mounting of the vessel **10** in upright position. This pair of members forms shoulders upon which the vessel can be conveniently supported. The extreme upper portion of the container **10** is generally provided with a removable cover **5**, for added strength, and with a circumferential outwardly extending lip or flange **6** upon which the dome-shaped cover **11** can be mounted.

The domed cover **11** is conveniently formed from two mating hemi-sections $\mathbf{11_{12}}$ diametrically separable one from another, each section constituting substantially a mirror image of the other. Both of hemi-sections $\mathbf{11_1}$,$\mathbf{11_2}$ are provided with corresponding external circumferential grooves $\mathbf{12_1}$,$\mathbf{12_2}$ and corresponding inter-

nal circumferential grooves $13_1,13_2$ which are continuous one set of grooves with respect to another when the two hemi-sections $11_1,11_2$ are joined. Each hemi-section $11_1,11_2$ is provided with diametrically oriented notched portions which form an opening **14** across the diameter of the cover **11** through which the nozzle **20** can be fitted. The inside diametrical edge of hemi-section 11_1 is provided with a slightly downwardly projected, outwardly extended lip or flange 11_{1A} and the inside diametrical edge of hemi-section 11_2 is provided with an outwardly extended lip or flange 11_{2A}, these edges forming male and female portions, respectively. These hemi-sections $11_1,11_2$ can thus be fitted together, with the nozzle **20** in place, with the lower circumferential groove **13** tightly secured upon the flange **6** to hold the domed cover **11** upon the container **9**, and secured in this position by use of the pens $15_1,15_2$ which snugly fit through small diameter openings in the hemispheres $11_1,11_2$ provided therefor. The hemi-sections $11_1,11_2$ can be further and more securely held in place by means of a tightly fitted band **16** which lies within the circumferential groove **12**, the ends thereof being secured together by a locking device **17**.

The liquid flow nozzle **20** is comprised of a tubular member having two different diameter adjoining axial openings **21,22**. It will thus be observed that the section of enclosing wall **19** which forms one side of the tubular member provides an opening **22** which is of smaller internal diameter than the relatively larger opening **21** formed by the section of enclosing wall **18** at the opposite end of the tubular member. Lateral openings provide high pressure and high pressure nozzle outlets **23,24**, respectively, located within the wall of the liquid flow nozzle **20** and the openings are sized one relative to the other so that a pressure differential exists between the two outlets. The nozzle **20** is maintained in a secure position within the domed cover **11** and it cannot rotate because of the pair of projecting flat-topped lugs $25_1,25_2$ which flush with flat lower edges $26_1,26_2$ of the domed cover **11**. A flexible or expandable bag **30**, provided with a single nozzle opening **29**, capable of containing a solution for injection through the dispensing end 20_A of the nozzle **20**, can be operatively communicated, via suitable means, to the low pressure outlet **24**.

Suitably, the removable cover **5** is provided with a pair of openings, each containing a short nozzle **33,34**. Lines **31,32** are connected through valves **35,36**, respectively, to nozzles **33,34**. Preferably, the lines **31,32** are flexible or semi-flexible an internally threaded screw caps **37,38**, respectively, provide a suitable means of connecting the terminal ends of lines **31,32** to externally threaded nozzles **24,23**. The same kind of connections **41,42** are provided, if desired, between the opposite ends of lines **31,32** and the inlet side of valves **35,36**, respectively. Similar connections **43,44** are also provided, if desired, between the outlet sides of the valves **35,36** and the nozzles **33,34** within the removable cover **5**. The nozzle portion **29** of the flexible bag **30** is suitably attached and held securely in place upon the nozzle **34** by a circumferentially enclosing band **28**.

Prior to loading an end 20_B of the nozzle **20** is operatively connected with a fresh water supply to which a solution is to be added. The opposite end 20_A of the nozzle **20** is operatively connected with a source to be supplied with water to which solution is to be continuously added. At the start of loading, there is no flow of water from nozzles **23, 24** because valves **35,36** are closed, and flow is initiated only on demand as when a tap is opened on the demand side 20_A.

In initiating loading, the flexible or inflatable bag **30** is filled ex situ via its nozzle opening **29** with a solution, e.g., an aqueous fluoride salt solution, to be dispensed and lowered into the container **9**. The cover **5** is then brought near the container **9** and the nozzle opening **29** is then fitted over the nozzle **34**, and secured in place by the circumferential band **28**. The cover **5** is then set in place upon the top of container **9**, and screw cap **43** of the line connected to the top of nozzle **34** secured in position on the outlet side of the closed valve **35**. Connection is then made between nozzle **33** and the outlet side of valve **36** by tightening down the screw cap **44** which connects the flexible line to the valve. The screw caps **42,38** of line **32** are then tightened down on the inlet side of valve **36** and nozzle **23**, respectively. Valves **35,36** are then opened. The hemi-sections $11_1,11_2$ are then fitted together and tightly secured in place about the nozzle **20** and upon the container **9** and tightly secured in place, as described.

In operation, fresh water flows through the axial openings **19,21** of nozzle **20** from a source opposite the direction shown by the open arrows. At outlet **23** the stream of water is split, one portion of the stream flowing through the outlet **23** into the confines of the container **9** while the other portion of the stream flows through the axial opening **22**. The water which flows into the container **9** exerts peripheral pressure upon the outer confines of the bag **30** forcing fluoride solution from the bag. The fluoride solution forced from the bag **30** flows through line **31** into the nozzle opening **22** due to the differential pressure, and is picked up by the fresh water which passes through the axial opening **22** so that the water flowing from the dispensing end 20_A of the nozzle **20** is fluorided.

The inner bag **30** is gradually collapsed and emptied of fluoride solution. As this occurs, the original volume of the filled bag **30** is displaced by the water which enters the container **9** through the outlet **23**. When the bag **30** is empty, it is replaced by another filled bag and the process repeated ad infinitum.

It is apparent that various changes, such as in the absolute or relative dimensions of the component parts, size and shape, materials used, and the like, can be made without departing the spirit and scope of the invention, as will be apparent to those skilled in the art. For example, the specific shape of the axial opening through the tubular flow nozzle to provide the desired pressure differential is subject to considerable variation. Rather than providing two communicating axial openings of differing internal diameters to form high pressure side and low pressure sides, respectively, the axial opening could be in the form of a gradual taper to provide the desired pressure differential. Or, e.g., a restriction such as a perforated plate may be provided within an axial opening of uniform diameter to provide a high pressure side and low pressure side, respectively. What is essential is that a restriction of some sort be provided to create the desired pressure differential. The desired differential pressure per se, on the other

hand, is readily determined and provided by well known principles, in connection with water flow rate, to meter the desired amount of solution into the fresh water.

The outer vessel is generally constructed of a rigid material such as plastic or metal, e.g., iron, steel, aluminum or the like. The vessel is generally built to withstand a moderately low pressure, e.g., 150 psig. The flexible bag is constituted of a relatively inert or non-reactive material which can be readily filled with a desired volume of solution, and then readily collapsed and emptied by the differential pressure provided. Various plastics and plastic-like materials which form staple articles of commerce are suitable for such purpose, e.g., polyethylene, polyvinyl acetate, ethylene terephthalate resin, nylon and the like.

It is apparent that various other changes can be made without departing the spirit and scope of the invention.

Having described the invention, what is claimed is:

1. In apparatus for adding a measured quantity of solution, such as a fluoride salt solution, to a conduit connecting a supply of liquid, such as fresh water, with a source to be supplied with water to which a measured quantity of the solution has been added, the combination comprising

a closed outer vessel formed by enclosing rigid walls,

a tubular flow nozzle having a nonuniform axial opening therethrough, an inlet side of large cross-sectional diameter and an outlet side, contiguous with said inlet side, of small cross-sectional diameter providing a high pressure side and a low pressure side, respectively, mounted within the conduit between the supply and the source to be supplied, said nozzle extending through the walls of, and being enclosed within, the said outer vessel, said tubular flow nozzle having lateral outlets located within the high pressure side and the low pressure side thereof, respectively, and

a flexible bag, provided with a nozzle opening, which can be filled with solution to be dispensed, located within the said closed outer vessel, the nozzle thereof being communicated with the low pressure outlet of the tubular flow nozzle

wherein a stream of fresh water can be flowed through the conduit from the supply source, through the axial opening of the nozzle, and then split at the high pressure outlet, a part of the stream passed into the container and a part thereof passed through the axial opening to the low pressure side of the axial opening, to exert a peripheral pressure upon the external portion of the flexible bag to force solution out of the nozzle of the bag through the said low pressure outlet and into the axial opening of the nozzle wherein it can be picked up, admixed with, and dispersed through the nozzle with the fresh water and then passed on through the conduit to the source to be supplied.

2. The apparatus of claim **1** wherein the closed outer vessel is formed from a lower container portion, including an enclosing side wall and a sealing bottom, and the upper portion of the container is provided with an enclosing domed cover.

3. The apparatus of claim **2** wherein the upper portion of the lower container is flanged, the domed cover is formed of two diametrically separable mating hemi-sections of substantially equal size, matching diametrically opposed notches which fit together to form a diametrically opposed opening through the domed cover, the inner lower edge of each hemi-section being provided with circumferential corresponding grooves and diametrical edges which mate together to contain the tubular flow nozzle within the diametrical opening through the domed cover.

4. The apparatus of claim **3** wherein the hemi-sections are provided with openings through which pins can be passed to secure the said sections together, and corresponding external circumferential grooves within which a flexible band can be placed and the ends secured together to further secure the hemi-sections in place about the tubular flow nozzle and upon the top of the container.

5. The apparatus of claim **3** wherein the upper portion of the container is provided with a removable cover containing a pair of openings with nozzle portions projected therethrough, and the high pressure and low pressure outlets of the tubular flow nozzle are connected via conduits through valves to the nozzle portions, respectively, within the removable cover.

6. The apparatus of claim **5** wherein the high pressure and low pressure side, respectively, of the tubular flow nozzle is constituted of communicating axial openings, the high pressure side being of greater internal diameter than that forming the low pressure side of the flow nozzle.

7. The apparatus of claim **6** wherein the terminal ends of the tubular member constituting the flow nozzle are externally threaded to provide means for threadable engagement with the ends of lines forming a conduit.

8. The apparatus of claim **7** wherein the outlets from the high pressure and low pressure sides of the flow nozzle are externally threaded nozzle portions, this providing means for threadable engagement with screw caps which can be used to secure conduits thereto.

9. The apparatus of claim **5** wherein the valves are mounted upon the removable cover of the container, flexible conduits are used to communicate the nozzle portions through the cover with the outlet sides of the valves and to connect the outlets of the tubular flow nozzle with the inlet side of the valves.

10. The apparatus of claim **9** wherein the top of the tubular flow nozzle is provided with projecting members with contact and flush with impinging lower edges of the hemi-sections to stabilize the said nozzle against rotation.

* * * * *