United States Patent [19]

Pax et al.

[11] **3,710,289**

[45] **Jan. 9, 1973**

[54] **DEFLECTION COIL**

[75] Inventors: **Wilhelmus Petrus Johannes Franciscus Pax; Henricus Johannes Van Rooy,** both of Emmasingel, Eindhoven, Netherlands

[73] Assignee: **U.S. Philips Corp.,** New York, N.Y.

[22] Filed: **Nov. 16, 1970**

[21] Appl. No.: **89,785**

[30] **Foreign Application Priority Data**

Dec. 4, 1969 Netherlands 6918204

[52] **U.S. Cl.** **335/213,** 336/205

[51] **Int. Cl.** **H01f 5/00**

[58] **Field of Search** 336/186, 206, 205; 335/213, 335/210; 29/605, 606; 313/75, 76; 219/149

[56] **References Cited**

UNITED STATES PATENTS

2,167,379	7/1939	Tolson	313/76
3,412,354	11/1968	Sattler	336/205
3,423,706	1/1969	Sampson et al.	335/213
2,949,593	8/1960	Staley et al.	336/186
3,488,541	1/1970	Barbin	335/213
3,396,356	8/1968	Whipple	336/206
3,007,087	10/1961	Corpew	335/213
3,088,200	5/1963	Birdsall et al.	219/149
3,234,632	2/1966	Marley	336/200

Primary Examiner—George Harris
Attorney—Frank R. Trifari

[57] **ABSTRACT**

Deflection coil, obtained by bending into a part-cylindrical shape a coil comprising a plurality of glue-coated insulated wires simultaneously wound side by side without insulating intermediate layers, each wire forming a flat spiral.

3 Claims, 3 Drawing Figures

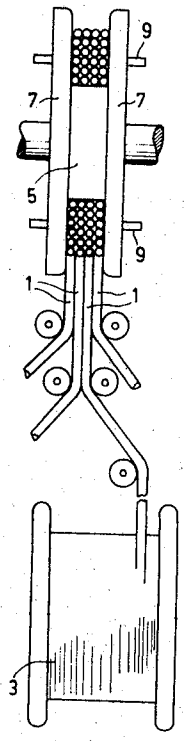

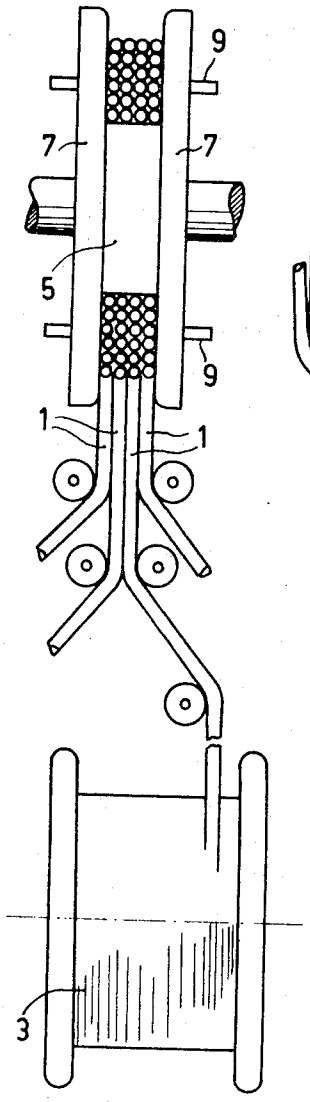

Fig.1

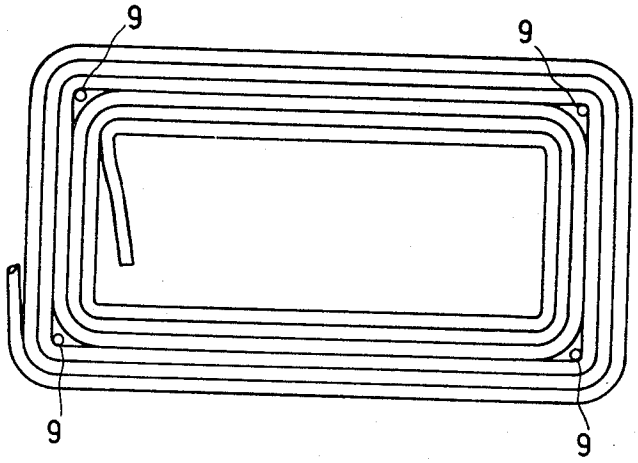

Fig.2

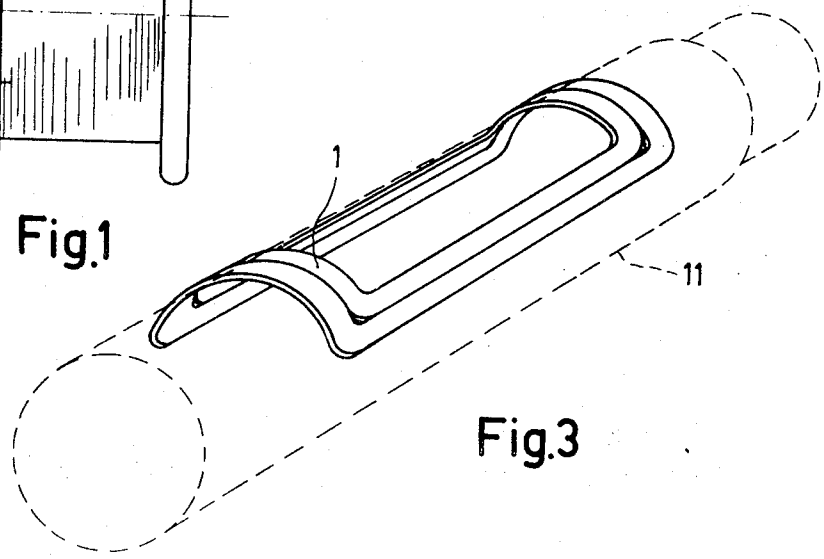

Fig.3

INVENTORS
WILHELMUS P.J.F. PAX
HENRICUS J. VAN ROOY
BY

Frank A. Trafani AGENT

DEFLECTION COIL

This invention relates to a deflection coil, more particularly, to a flat coil bent over, subsequent to winding, at least partly into the form of a cylindrical plane for producing a magnetic deflection field in a cathode-ray tube, around the tubular envelope of which usually two coils of said kind for the horizontal deflection and two coils for the vertical deflection are arranged in pairs diametrically opposite each other. By winding the coil in a flat shape and by subsequently bending it into the cylindrical shape the winding operation is simplified.

Deflection coils for use on color television camera tubes in which a separate cathode-ray tube is used for each of the three fundamental colors, have to satisfy stringent requirements as to identity of the coils to be employed in one and the same apparatus, for example, for horizontal deflection, in order to avoid imaging defects. It is known to form a flat deflection coil from a plurality of relatively fitting rectangular coil portions of progressing size and to bend the set of coils, baked together to a slightly rigid unit, into the required semi-cylindrical shape. Without prohibitively high costs it has hitherto not been possible to wind the coil portions of normal wire with such complete regularity that subsequent bending of the coil does not disturb this regularity so that in this way the three accurately identical coil pairs cannot be obtained.

An object of the invention is to provide a structure which does permit of doing so.

The coil in accordance with the invention is characterized in that the coil to be bent comprises a plurality of glue-coated, insulated wires simultaneously wound side by side without intermediate insulating layers, the turns of each wire each forming a flat spiral. The spirals are connected outside the coil in known manner either in series, in parallel or in series-parallel. Winding is completely regular since it does not comprise crossing winding portions and by using wire of uniform thickness accurately identical coils can be obtained at a low cost. It also has been found that the regularity of the coils will not be disturbed by subsequent bending thereof.

It should be noted that the bifilar winding of saddle-shaped and toroidal deflection coils is known. However, the coils concerned there assume the fairly complicated, final shape during the winding operation itself so that they are not first wound in a simple flat form. The regularity of winding of these coils cannot be improved by multifilar winding and the purposes aimed at are quite different.

There is furthermore known a coil for other purposes than deflection which is wound from an insulating strip having a plurality of parallel printed conductors. The width of the strip is comparatively large and this structure is intended for use in coils having a comparatively large axial size, which coils need not be bent after winding.

The invention will be described more fully with reference to the accompanying drawing, in which:

FIG. 1 illustrates the winding of a deflection coil in accordance with the invention,

FIG. 2 is a side elevation of such a coil, and

FIG. 3 shows the final shape of the coil.

FIG. 1 shows somewhat simplified the winding of a flat, rectangular coil (see also FIG. 2) comprising a number, in this case four, of insulated wires 1 wound side by side without insulating intermediate layers. The wires, provided with a preferably thermoplastic glue layer which is solid at room temperature, are wound from four supply reels 3 (one of them is shown in FIG. 1) in a jig formed by a rectangular winding mandril 5 and two detachable flanges 7. The distance between the flanges (for example, about 2 mms) is equal to four times the wire thickness inclusive of insulation and glue layer. The four wires (shown in a sectional view in FIG. 1 in the winding jig) coil up to form four flat spirals, which, provided the wire thickness is constant, are completely regular even with a fairly large number of "layers." Furthermore, there is no need to take special precautions because the wires do not cross each other at any place and the position of each turn is determined by the winding jig and the adjacent windings. It is preferred to wind one or more portions, in this case the second half of the coil,about four auxiliary pins 9 passed through the winding jig, shown in in FIG. 2. The coil then more nearly approaches the rectangular shape which provides an optimum magnetic field.

After baking the coil into a single unit, which may be performed in a conventional manner by passing a current pulse through each of the four spirals in the winding jig, the coil can be bent in a second jig into the desired cylindrical shape (see FIG. 3) for matching a camera tube 11. The four spirals may be connected in series or in parallel, or they may be electrically interconnected in a different way.

The secondary deformations involved in bending the coil into the cylindrical shape, for example, by relative shift of the spirals appear to remain within the tolerances of accuracy acceptable for the purpose concerned in the form of winding described with the small coil thickness required for the kind of deflection coils concerned.

What is claimed is:

1. A CRT deflection coil having a partially cylindrical shape comprising, a plurality of glue-coated insulated wires that are located side by side without an intermediate insulating layer therebetween so that each wire forms a flat spiral winding with an aperture and a plurality of turns, each of said apertures being substantially identical, said windings being mounted together with the apertures in alignment to form an integral deflection coil unit having a plurality of identical concentric flat spirals disposed side by side, and wherein the flat coil composed of the flat spiral windings has the shape of a partial cylinder.

2. A deflection coil as claimed in claim 1 wherein each of the wires that make up a spiral winding have a cylindrical cross-section, said wires being adapted to be connected together in a plurality of configurations.

3. A deflection coil as claimed in claim 1 wherein each of the wires that make up a spiral winding have a substantially identical cylindrical cross-section.

* * * * *