United States Patent [19]

Cook

[11] **3,707,804**

[45] **Jan. 2, 1973**

[54] **GROOVED TRACK FOR TOY VEHICLES**

[75] Inventor: **John S. Cook,** Sunnyvale, Calif.

[73] Assignee: **Mattel, Inc.,** Hawthorne, Calif.

[22] Filed: **Aug. 25, 1970**

[21] Appl. No.: **66,757**

[52] **U.S. Cl.** .....**46/202,** 46/1 K, 238/10 E

[51] **Int. Cl.** **A63h 19/30**

[58] **Field of Search** .....104/60, 149; 46/26, 202; 238/10 E, F; 272/4; 46/1 K

[56] **References Cited**

UNITED STATES PATENTS

2,862,333	12/1958	Gardiol	238/10 E
375,422	12/1887	Leinwather	238/10 R
3,445,063	5/1969	Ferentinos	238/10 F
3,480,210	11/1919	Perrinjaquet	238/10 E

Primary Examiner—Drayton E. Hoffman
Assistant Examiner—Richard A. Bertsch
Attorney—Seymour A. Scholnick

[57] **ABSTRACT**

A track for self-powered or coasting type toy vehicles which allows passing of slower vehicles by faster ones by encourgaging lane changing when vehicles bump one another prior to passing, while thereafter reducing the tendency of vehicles to wander from one side of the track to the other. The track has several low ridges extending along its length for urging vehicles to run straight along the track, the ridges being low enough and being rounded to enable a vehicle to easily climb over them to another section of the track. The ridged track section is used along banked curves to reduce the tendency for vehicles to climb the curve and is used along straight-away sections to enable passing while reducing wandering tendencies.

6 Claims, 7 Drawing Figures

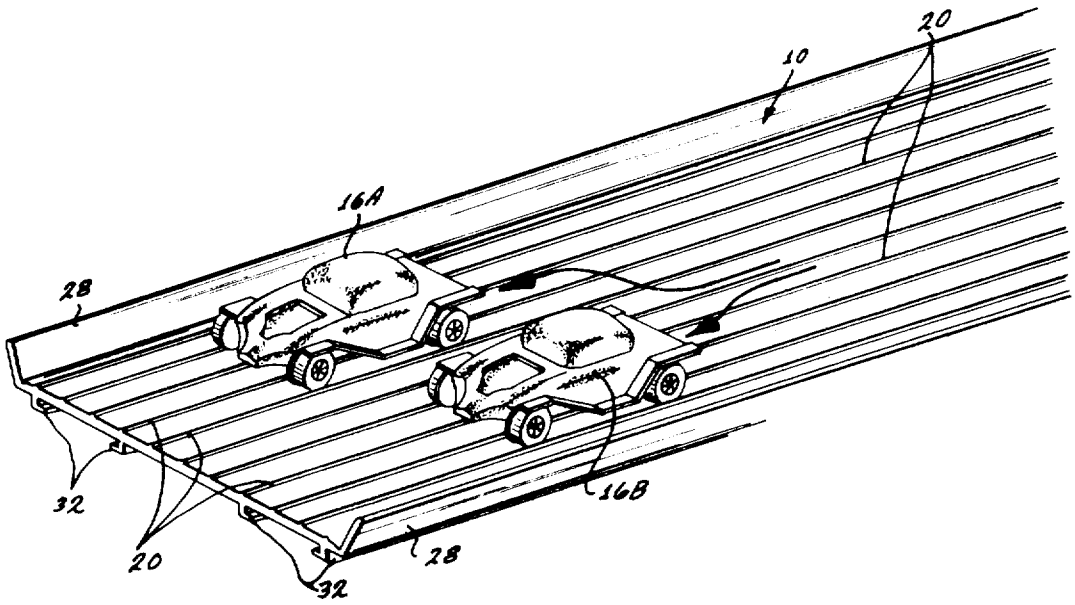

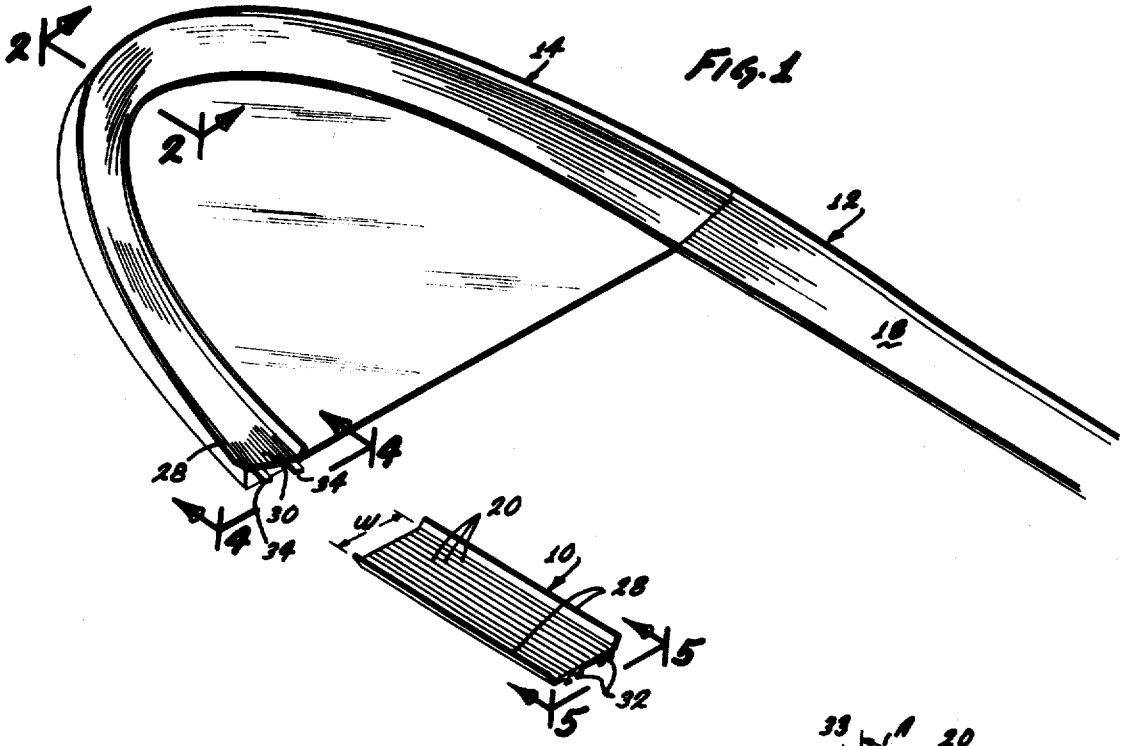

FIG. 1

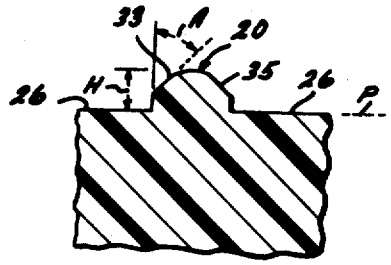

FIG. 3

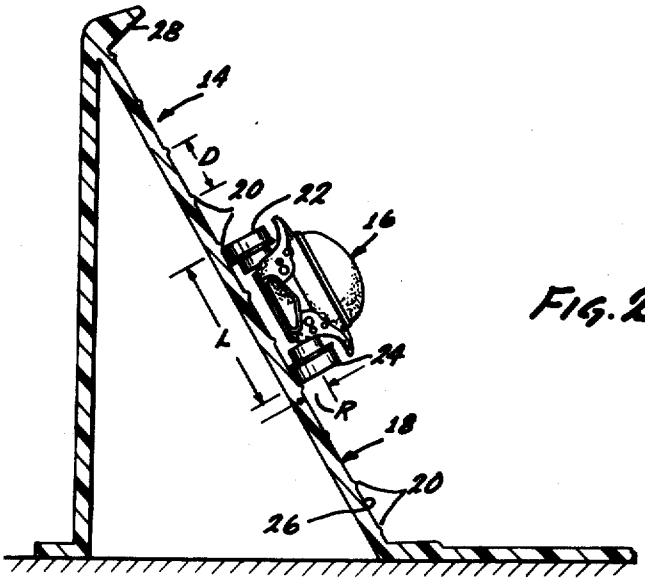

FIG. 2

INVENTOR
JOHN S. COOK

BY Harold H. Crain
ATTORNEY

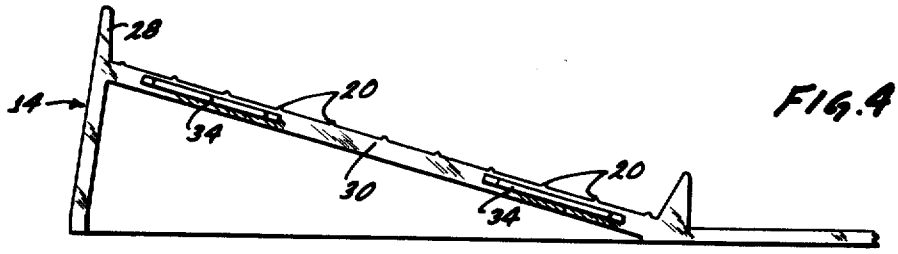

FIG. 4

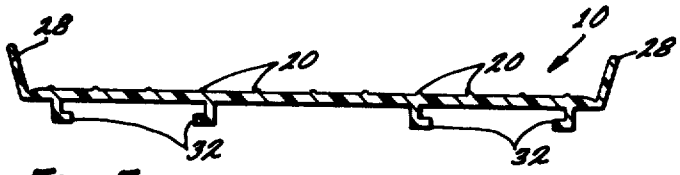

FIG. 5

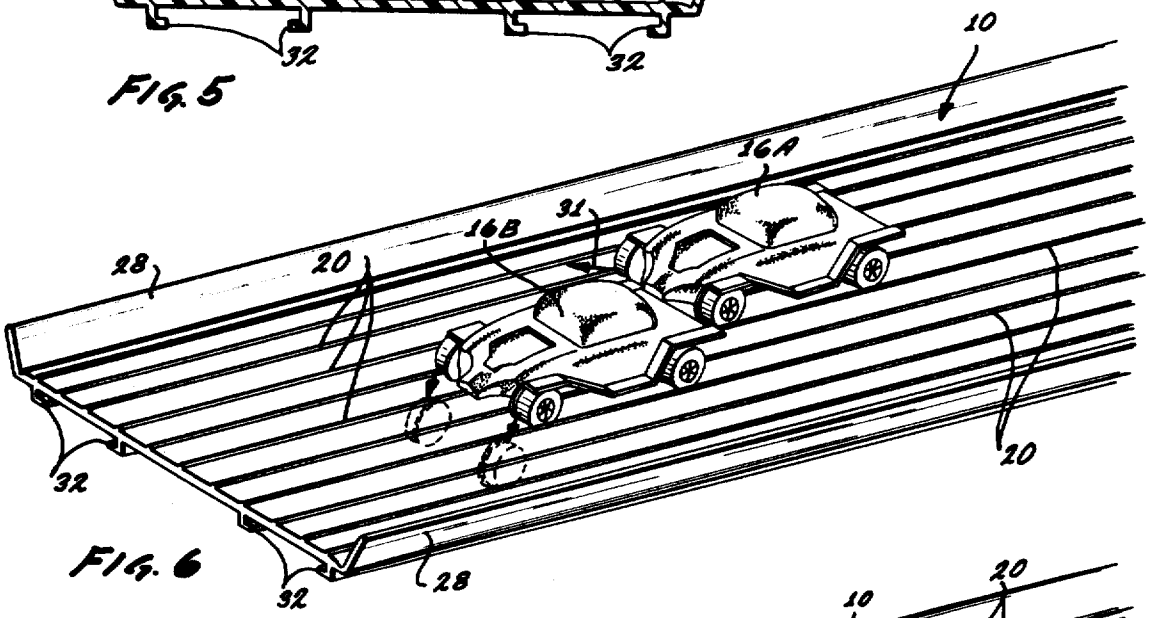

FIG. 6

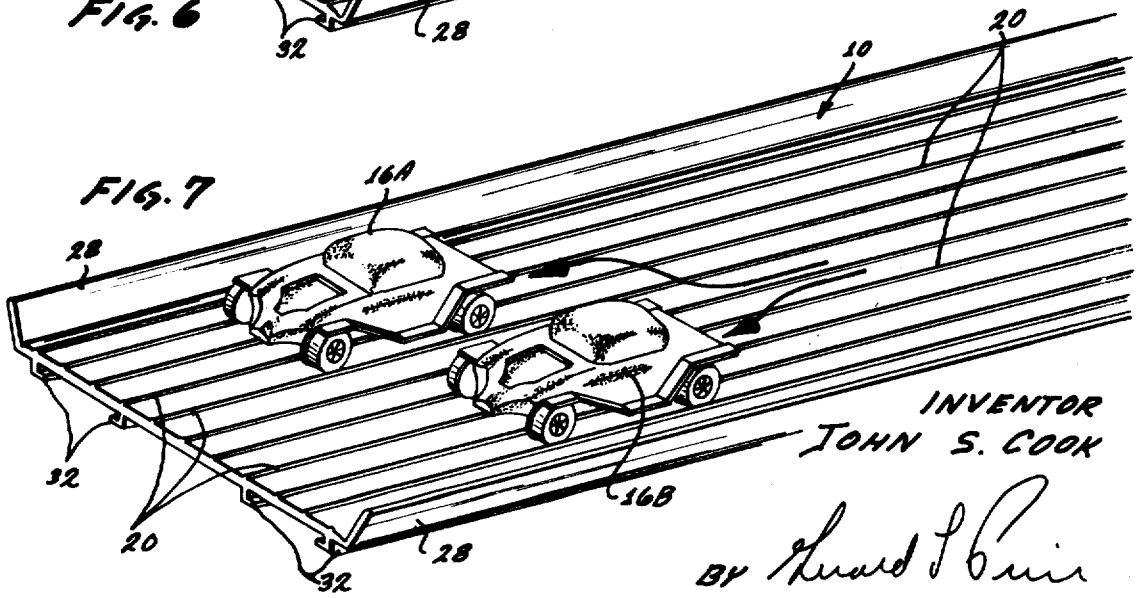

FIG. 7

INVENTOR
JOHN S. COOK

BY Richard S. Sciascia
ATTORNEY

GROOVED TRACK FOR TOY VEHICLES

BACKGROUND OF THE INVENTION

1. Field of the Invention

This invention relates to toy vehicles, and more particularly, to a track for use with such vehicles.

2. Description of the Prior Art

Toy vehicles that are free from electrical or other connections to a track can engage in races along the track wherein they pass one another by changing lanes, in the same manner as actual racing drivers pass one another. If a wide track is used which is smooth and flat, the vehicles can readily change lanes to pass. However, the vehicles then tend to repeatedly carom from one side wall to the other on a long straight run. The caroming vehicles may approach the side walls at a great enough angle to spin out of control, or may crash sideways into one another with enough force to overturn. A track which urged vehicles to move along even straight sections in a stable manner while allowing vehicles to readily pass one another, and which increased stability on curves, could make such vehicle races even more entertaining.

OBJECTS AND SUMMARY OF THE INVENTION

An object of the present invention is to provide a track for toy vehicles, which encourages stable vehicle motion along them while encouraging the passing of slower vehicles by faster ones.

Another object of the present invention is to provide a banked curve section for toy vehicles, which promotes stability of the vehicles therealong.

In accordance with one embodiment of the present invention, a track for toy vehicles is provided which maintains the vehicles in a stable path to prevent wandering, yet which enables the vehicles to change lane position. The track has a vehicle-supporting surface which contains several parallel ridges that tend to confine the vehicle wheels to movement along the length of the track. The ridges, having a very low height, are rounded to allow the vehicle to move over them in a stable manner to change lane position when the vehicle is subjected to small lateral forces. Accordingly, when a faster moving vehicle bumps into a slower vehicle ahead of and slightly to one side of it, the vehicles tend to change position on the track so that the faster vehicle can pass the slower one. The ridges are spaced from one another by a distance which is much less than the lateral spacing of the vehicle wheels, so that there are many stable positions of the vehicle on the track. The track with ridges can be utilized on a banked curve to tend to turn the vehicle into the curve for stable motion therealong.

The novel features of the invention are set forth with particularity in the appended claims. The invention will be best understood from the following description when read in conjunction with the accompanying drawings.

BRIEF DESCRIPTION OF THE DRAWINGS

FIG. 1 is a partial perspective view of a track layout utilizing track sections constructed in accordance with the invention;

FIG. 2 is a view taken on the line 2—2 of the track of FIG. 1, with a toy vehicle thereon;

FIG. 3 is an enlarged end view of a ridge of the track of FIG. 1;

FIG. 4 is a view taken on the line 4—4 of the track of FIG. 1;

FIG. 5 is a view taken on the line 5—5 of the track of FIG. 1;

FIG. 6 is a perspective view of a straight section of the track of FIG. 1, showing the manner in which cars change lines to pass; and

FIG. 7 is a view similar to FIG. 6, showing the vehicles during passing.

DESCRIPTION OF THE PREFERRED EMBODIMENTS

FIG. 1 illustrates a track constructed in accordance with the invention, which includes straight track sections **10**, **12** and a curve section **14**, the various track sections being connected in series to form a track layout. The layout is typically formed in a closed loop and can be used to race toy vehicles of the type shown at **16** in FIG. **2**. The width W of the track is sufficient to carry at least two vehicles side-by-side so that they can pass one another. Although unpowered vehicles can be used which are given a boost of speed by an accelerating device positioned along the layout, self-propelled cars can be used of the type which carry a rechargeable battery and electric motor. The track has a vehicle-supporting surface **18** that maintains the vehicle in stable motion along both straight-aways and curves, but which also enables a faster vehicle to pass a slower vehicle even if the faster vehicle initially approaches the slower one from behind it instead of in a different lane.

The vehicle-supporting surface **18** has several parallel ridges **20** extending along the length of the track, which provide the required amount of stability for encouraging a vehicle to remain in its lane position while allowing it to change lane position for passing. The wheels **22**, **24** of the vehicle generally move along grooves **26** that are formed between the ridges, while one of the wheels such as wheel **22** shown in FIG. **2** engages a ridge. The ridge **20** urges the wheel to remain in its lane position. The front wheels of many types of vehicles are fixed in steering orientation, so they tend to roll the vehicle straight ahead. When the vehicle enters the curved track section **14**, it tends to continue in a straight line and strike the outer rail **28** at the side of the track. Of course, this is undesirable because the vehicle may fly over the rail or carom off it in an unstable manner that may cause spinout or upsetting, particularly if the vehicle strikes another one. The ridges **20** at the beginning region **30** of the curve section tend to steer the wheel around the curve and prevent it from hitting the outer side rail. The ridges also aid in stable motion for a slow moving car that traverses a highly banked curve. The ridges not only produce better performance in travel about a curve, but allow a vehicle within a wider speed range to traverse a curve of predetermined banking and curvature.

The nominally straight track sections best shown in FIGS. **5**, **6** and **7** are designed to reduce the tendency of toy vehicles to wander on a long straight region of track. When a car wanders in this manner, it may carom from one side wall to the other, resulting in loss of speed, the possibility of climbing the walls and leav-

ing the track, and crashing into another vehicle so hard that they turn over. However, the ridges are low enough to enable vehicles to pass one another in a stable and entertaining manner. FIG. 6 illustrates the situation where one vehicle **16A** moves faster and approaches another vehicle **16B**, the slower vehicle **16B** partially blocking the path of the other. When the faster vehicle **16A** bumps into the other vehicle **16B**, some instability is established which causes the vehicles to veer to one side. If both vehicles veer to the same side, a second bump will take place. If one vehicle **16A** veers to the right as shown by arrow **31** while the other veers to the left, then the path of the faster vehicle will not be blocked. The faster vehicle **16A** can then pass the other one in the manner shown in FIG. 7.

After one vehicle bumps the other and they change lane position, there is a tendency for both of them to move at an angle to the track length until they hit the side rails **28**. However, the ridges **20** tend to stabilize the paths of the vehicles, to urge them to thereafter travel straight along the length of the track. A proper height and configuration of the ridges **20** is important in allowing vehicles to ride over them in a stable manner while allowing the ridges to generally maintain a straight vehicle path. Referring again to FIGS. **2** and **3**, each ridge **20** has a height H which is much less than the radius R of the wheel of a toy vehicle which runs along the track. In addition, the walls **33**, **35** of the ridge are rounded. These walls form troughs **26** in which at least some of the vehicles lie. It is desirable that the height H of the ridges be less than about one-fifth the radius R of the smallest wheels to run along the track, in order to facilitate climbing of the wheels over the ridges. Generally, a ridge height of less than one-tenth R is preferred. It is also desirable that a majority of the height of each ridge wall extend at an angle A of more than a few degrees from the vertical. In the case of a banked track whose width does not extend horizontally, the angle A may be taken with respect to an imaginary line P extending across the width of the track. The ridges **20** do not have to be round, but can instead have sloping sides, extending at an angle A of more than several degrees to facilitate wheels rolling over them. It is preferable to employ vehicle wheels with sharp corners, to minimize any tendency to climb the ridges prior to a disturbance of the vehicle.

As previously mentioned, the width W of the track should be great enough to accommodate at least two vehicles that are side-by-side. Generally, a width somewhat greater than this, such as one which is about three to four times the width of the vehicle **16** is utilized to provide substantial clearance between passing vehicles. The distance D between adjacent ridges **20** is substantially less than the distance L between the outsides of the wheels **22**, **24** of the vehicle. A major reason for this is to provide a stabilizing ridge before a vehicle has wandered far from a straight path. Thus, in order for a vehicle to carom from one side rail to the other, it must pass over several ridges, each of which tends to return it to a straight path. The distance D between adjacent ridges is made large enough so that the trough **26** can accommodate at least the front or rear wheels of the widest tread vehicle wheels which are likely to be used. The use of several closely spaced ridges also provides many lane positions to increase the number of relative positions at which cars bump one another, to add realism. In a typical vehicle set, the track will have a width W sufficient to accommodate about three vehicles, and each vehicle will have tires with a radius R about one-sixth the width of the vehicle, so that the track has a width W equal to about **18R**. For a ridge height H less than about one-fifth the radius R of a vehicle wheel, the ridge height H is therefore less than about one-hundredth the width W of the track. Thus, the tracks typically have ridge heights less than about one-hundredth the width of the track.

The straight track sections **10**, **12** are generally formed of a flexible plastic material in an extrusion process, so that the tracks have a constant cross-section along their length. As shown in FIG. **5**, the straight track sections have brackets **32** formed along their lower surfaces. These brackets can receive tongues **34** formed in the curved section **14** to enable the straight and curved sections to be held together. The curved section **14** typically has a first portion **30**, where it connects to the straight track section, which is already banked, though at a small angle. The flexible straight track section can readily twist so that the track defines a vehicle-supporting surface which smoothly increases in banking angle from zero to the maximum. The generally flat configuration of the track makes it easy to produce, and the use of ridges assures stability even if the track warps slightly into a somewhat convex or concave shape in cross-section.

Although ridges **20** are shown which appear as rounded bumps protruding from an otherwise flat track surface, a variety of other types of groove-forming means can be utilized to provide grooves along which vehicle wheels can move. For example, a track can be formed whose cross-section displays numerous scallops into which vehicle wheels are received. Another alternative, which can be utilized with vehicles wherein the front wheels have a narrower tread than the rear wheels, employs grooves which are just wide enough to receive the front wheels. The back wheels then ride on the top of the track so they do not scrape along any ridges or the like. The walls of the ridges can be more steeply inclined on one side than on the other to encourage vehicles to move towards one side of the track or to maintain them in the middle of the track. It is also possible to provide short track sections which are free of ridges, to encourage wandering therealong, and to provide other track sections with substantially higher ridges.

Although particular embodiments of the invention have been described and illustrated herein, it is recognized that modifications and variations may readily occur to those skilled in the art and, consequently, it is intended that the claims be interpreted to cover such modifications and equivalents.

What is claimed is:

1. Toy vehicle apparatus comprising:

a toy vehicle which has at least one pair of wheels that are laterally spaced by at least a predetermined distance; and

an elongated track with a generally flat vehicle supporting surface which is wider than said predetermined distance at which said wheels are laterally spaced, by at least twice said distance; a plurality of substantially parallel narrow spaced ridges ex-

tending upwardly from and longitudinally of said surface and defining vehicle lanes for engaging said wheels to guide them for movement along the length of the track, said ridges being spaced apart a distance less than said predetermined distance and of a height which is low enough to allow said wheels of said toy vehicle to stably move over said ridges to different lane positions on said track when said vehicle is subjected to lateral forces.

2. The apparatus described in claim 1 wherein:

said ridges are laterally spaced by distances greater than the thickness of said vehicle wheels, and said ridges have side walls which are rounded at least at their tops to encourage said vehicles to climb over said ridges when said vehicles are urged to move sidewardly.

3. The apparatus described in claim 1 wherein:

said ridges have a height of less than one-fifth the radius of each of said wheels.

4. The apparatus described in claim 1 wherein:

said ridges are laterally spaced from each other by a distance which is less than said predetermined distance at which said wheels are laterally spaced, but which is more than the thickness of the wheels.

5. Toy vehicle track apparatus comprising:

an elongated track a vehicle supporting surface defining a plurality of substantially parallel ridges extending in a direction along the length of the track and defining wheel-supporting grooves between said ridges, said track surface being substantially flat between said ridges and said ridges being rounded at their tops.

6. The toy vehicle track apparatus described in claim 5 including:

first and second toy vehicles, each having a pair of laterally spaced front wheels; and wherein

said track is wider than the combined width of both of said toy vehicles, said ridges are laterally spaced by less than the lateral spacing of the front pair of wheels on either of said vehicles, and said ridges have heights less than one-fifth the radius of any of said wheels on said toy vehicles.

* * * * *