United States Patent

Pisarek

[15] **3,703,977**

[45] **Nov. 28, 1972**

[54] **COTTON EXTRACTOR**

[72] Inventor: **Bernadette M. Pisarek,** 811 Main Street, East Pittsburgh, Pa. 15112

[22] Filed: **April 14, 1971**

[21] Appl. No.: **133,891**

[52] **U.S. Cl.** **221/213,** 206/63.5

[51] **Int. Cl.** **B65h 3/22**

[58] **Field of Search** 206/56, 63.5; 221/312, 213; 294/1; 19/145.3

[56] **References Cited**

UNITED STATES PATENTS

2,443,520 6/1948 Schwartz et al. .....206/56 AC

Primary Examiner—Stanley H. Tollberg

[57] **ABSTRACT**

A device for removing cotton from containers, the device including a shaft with a serrated ball for gripping the cotton so to remove it from the container.

1 Claim, 4 Drawing Figures

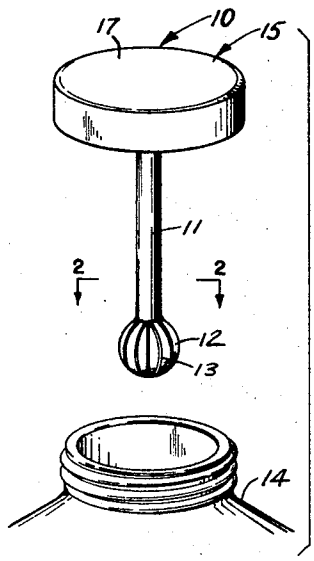

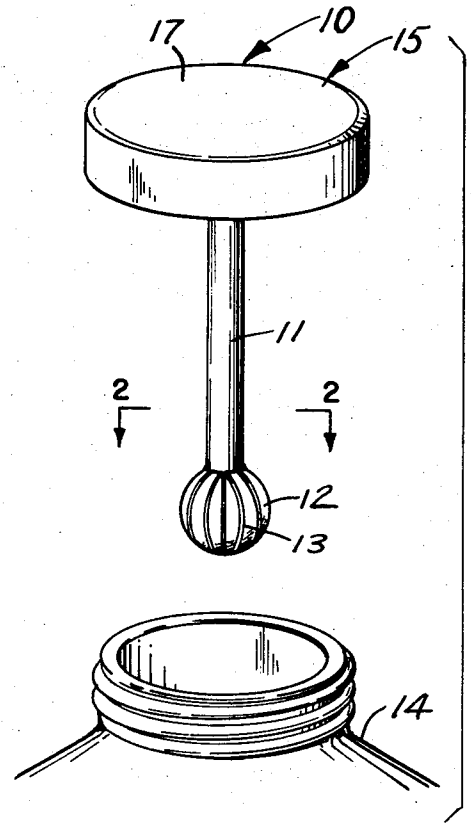

FIG. 1

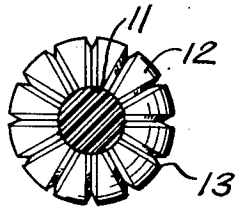

FIG. 2

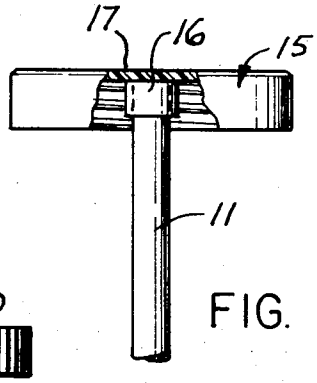

FIG. 3

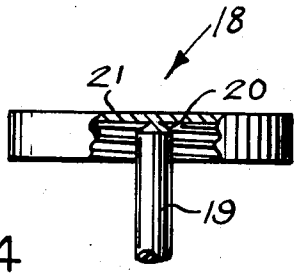

FIG. 4

INVENTOR.
BERNADETTE M. PISAREK

COTTON EXTRACTOR

This invention relates to devices for handling cotton, and more particularly to a cotton extractor device.

It is therefore the primary purpose of this invention to provide a cotton extractor device which will be removably attached to the cap of a container.

Another object of this invention is to provide a cotton extractor device which may be used while it is attached to the cap or may be removed therefrom for more ease of manipulation in extracting the cotton from the container.

A further object of this invention is to provide a device of the type described which may be of plastic throughout its entirety, the stem portion being easily seperatible from the cap portion which is also plastic.

Other objects of the present invention are to provide a cotton extractor which is simple in design, inexpensive to manufacture, rugged in construction, easy to use and efficient in operation.

These and other objects will become readily evident upon a study of the following specification, together with the accompanying drawing wherein:

FIG. 1 is a perspective view of the present invention shown removed from the container; the container being shown fragmentated;

FIG. 2 is an enlarged transverse view taken along the line 2—2 of FIG. 1;

FIG. 3 is a fragmentary vertical view of the present invention shown in elevation; and

FIG. 4 is similar to FIG. 3 but showing a modified form of the invention.

According to this invention, a cotton extractor device **10** is shown to include a stem **11** having an attached serrated ball **12**, the serrated edges **13** serving to grip the fibers of the cotton by rotating the device **10**, thus lifting them from within the container **14**.

It shall be noted that cap **15** of container **14** has a centrally positioned sleeve member **16** which projects away from the end wall **17**, the sleeve **16** frictionally receiving the stem **11** so that stem **11** may be removed

therefrom if desired for easy manipulation to grip the fibers of the cotton.

It will be noted further that the stem **11** and its attached serrated ball **12** are of plastic material and the cap **15** may also be of plastic material if desired.

Looking now at FIG. **4** of the drawing, one will see a modified cap **18** which is secured to a stem **19** by the tapered end **20**, the tapered end **20** being easily separatible from the end wall **21** of cap **18** by moving it back and forth until it ruptures at the tapered end **20**.

It shall be further noted that stem **19** and cap **18** are of similar plastic material.

What I claim is:

1. A cotton extractor device, comprising in combination, a removable stem, a serrated spherical ball carried by said stem for engaging the cotton fibers so to remove the cotton from within a container, cap means for said container including a sleeve portion for holding said stem of said device, one end of said stem being frictionally received within said sleeve of said cap and said sleeve being fixedly secured to a center of the underside of said cap so that said device will be insertable within said container and said stem of said device is slided out of said sleeve of said cap when desired so as to more easily manipulate said device in removing the cotton from within said container, the opposite end of said stem including said spherical ball, said serrated spherical ball being provided with grooved serrations on the surface thereof, said balled grooved serrations having edges that serve to ensnare the said cotton fibers so that said cotton will cling to said device when lifted from within said container, said serrations being arranged in longitudinal configuration between opposite poles of said ball and wherein said poles are along an axis of said stem, whereby said serrations are on all sides of said ball except where said ball enjoins said stem so that all sides of said ball will ensnare cotton whether said ball is positioned above said cotton, along the same or therebelow.

* * * * *