United States Patent

Gorinas et al.

[15] 3,702,500

[45] Nov. 14, 1972

[54] **METHOD FOR OBTAINING ELECTRICAL CONNECTIONS, ESPECIALLY FOR MICROCIRCUITS**

[72] Inventors: **Guy G. Gorinas,** Saint Michel-sur-orge; **Jean C. A. Regal,** Montlucon, both of France

[73] Assignee: **Societe Alsacienne De Constructions Atomiques De Telecommunications Et D'Electronique "Alcatel",** Paris, France

[22] Filed: **July 30, 1970**

[21] Appl. No.: **59,397**

[30] **Foreign Application Priority Data**

July 31, 1969 France.....6926367

[52] **U.S. Cl.** .....**29/628,** 29/589, 174/68.5, 317/101, 339/118 R, 339/278 C

[51] **Int. Cl.**.....**H01r 43/00,** H05k

[58] **Field of Search**.....29/504, 589, 502, 628; 339/118 R, 118 RY, 278 C; 174/68.5; 317/101 CC

[56] **References Cited**

UNITED STATES PATENTS

2,354,081	7/1944	Weder	29/504 X
2,735,050	2/1956	Armstrong	29/504 X
2,737,711	3/1956	Smith	29/504 X
2,846,762	8/1958	Walker	29/504 X
3,110,089	11/1963	Hill	29/504 X
3,165,403	1/1965	Treaftis et al.	29/504 X
1,170,388	2/1916	Anschutz	339/118 RY X
1,792,973	2/1931	Frenz	339/118 R
2,655,641	10/1953	Asoff	339/278 X
2,947,939	8/1960	Horwig	339/118 R X
3,622,944	11/1971	Tsuchiya et al.	339/118 R X

Primary Examiner—John F. Campbell
Assistant Examiner—Ronald J. Shore
Attorney—Sughrue, Rothwell, Mion, Zinn & Macpeak

[57] **ABSTRACT**

An electrical connection is formed by coating two conductors with a metal capable of forming an amalgam with mercury, forming an amalgam by immersing the coated conductors in a mercury bath, withdrawing them thereby leaving a small meniscus of excess mercury on each amalgam, and placing the meniscuses of mercury in contact with each other.

1 Claim, 2 Drawing Figures

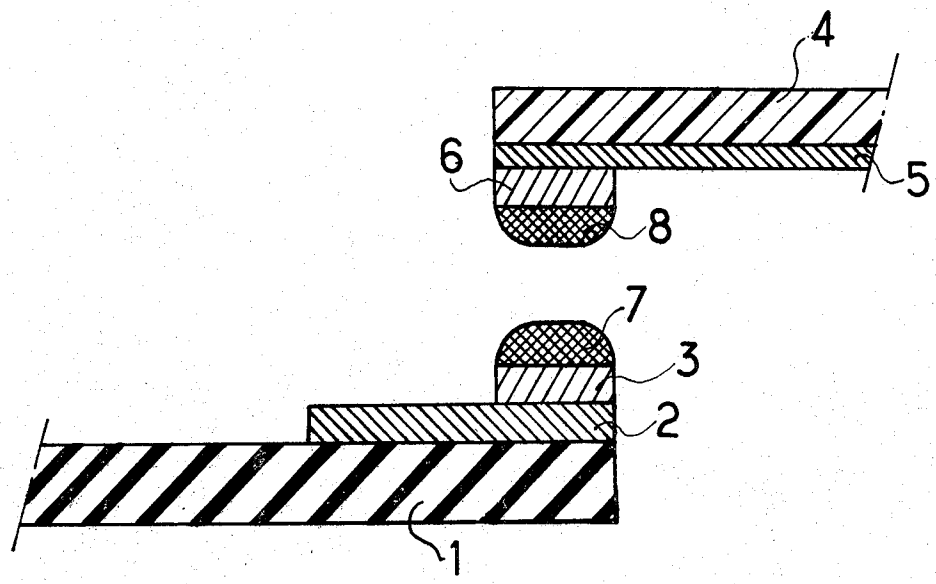

FIG.1

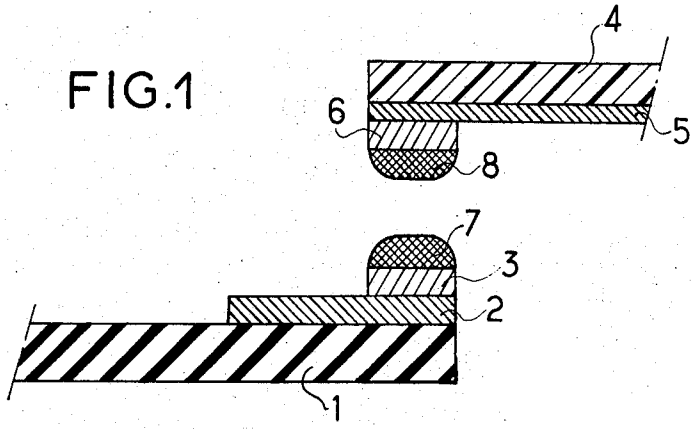

FIG.2

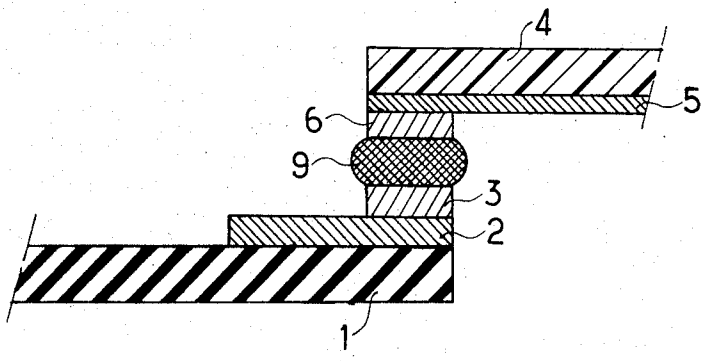

METHOD FOR OBTAINING ELECTRICAL CONNECTIONS, ESPECIALLY FOR MICROCIRCUITS

This invention concerns the field of connections and members used for this purpose, for example, for microcircuits.

We know that we can establish contact or connection between the output terminal lugs of a microcircuit, for example, and of exterior conductors, either by means of welding, using heat compression or ultrasound, or by mechanical means, especially by means of pressure connectors.

These earlier methods however, entail a certain number of inconveniences:

First of all, they do not enable us to obtain sufficient connection density per unit of microcircuit length, which leads to a noteworthy increase in the size of the devices in which these microcircuits are incorporated.

Besides, the connections thus made offer mediocre reliability beyond two or three connections per millimeter, so that their use cannot be contemplated in certain electronic devices where very great operational reliability must be guaranteed.

Furthermore, the accomplishment of such connections requires the use of important technical means which sometimes considerably increases the overall operating cost.

To eliminate these inconveniences and, in particular, for the purpose of increasing the density of connections, engineers in this field have already proposed that the terminal lug as well as the conductor be tin-plated in advance, that the two elements be juxtaposed, and that these tin coatings be finally fused together.

Although such a technique may sometimes lead to rather good results, it nevertheless requires a large welding apparatus and it follows from this that the connections thus made lead to a particularly high cost.

Moreover, the fusing of such weldings requires the use of high temperatures which are capable of leading to the deterioration of the substrate or of the components of the microcircuits on which they are made.

This invention is intended to provide a method for obtaining electrical connection members enabling us to achieve considerable connection density, something which is particularly desirable in microcircuits, while guaranteeing a high degree of reliability, even at low temperatures.

The method involved in this invention is characterized by the fact that we cover each of the conducting members to be connected with a thin layer of at least one metal capable of constituting an amalgam with mercury and that we then establish, on each of said members, an amalgam covered by a thin film of mercury in the form of a meniscus with a small curvature, obtained by placing each of these members in contact with a surplus of mercury with respect to the quantity strictly necessary for the establishment of the amalgam, the connection being then accomplished by the simple juxtaposition of the mercury meniscuses formed, respectively, on the members to be connected.

The invention also, by way of a new industrial product, concerns an electrical connection member characterized by the fact that it essentially involves a conducting body on which is deposed an amalgam formed between the mercury and at least one coating metal, said amalgam being topped by a thin film of mercury in the form of a meniscus with a small curvature.

The process of the invention may be applied advantageously to the connection of microcircuit members, such as the terminal lugs and the conductors, making the establishment of contacts between them and their disconnection particularly easy.

The coating metal selected here is gold, silver, or any other metal capable of forming a stable and solid amalgam with mercury, under the conditions under which the connection members are used.

The formation of the amalgam and the mercury meniscus on the members may be accomplished by simple immersion of these members in a bath of mercury for a very short period of time.

In practice, it was found that a thin layer of coating metal was sufficient to obtain an amalgam that would stick to the conductor. For example, for a cylindrical conducting wire with a certain diameter, it is advisable to deposit metal with a thickness in excess of 0.1 mu.

The quantity of mercury constituting the meniscus surrounding the amalgam as such must be just sufficient to permit the connection of the two connecting members involving such meniscuses. By way of indication and without any limitations, it was found that, for a flat conductor wire with width d, meniscuses having a deflection ranging from $0.05d$ to $0.2d$ could be suitably formed.

The invention offers the following advantages, among others:

As a result of the liquid junction accomplished by the mercury meniscuses, the connections thus performed can be very easily and rapidly mounted or dismounted. In addition, the terminal lug and the conductor each retain their mercury meniscus as a result of the surface tension between the mercury and the subjacent amalgam; such an assembly or disassembly can therefore be accomplished as desired, without any need for proceeding to a new immersion, in connection with each operation;

When the mercury meniscuses are superposed, their union accomplishes the self-alignment of each of the conductors with the corresponding terminal lug, which makes it possible to avoid the use of a high-precision positioning system;

As a result of the adherence of the mercury meniscuses to the subjacent amalgam, said mercury cannot come into contact with the mercury of the neighboring meniscuses, which leads to the possibility of obtaining a great connection density, on the one hand, and high reliability, on the other hand;

In the particular case where such connections are intended to be brought to very low temperatures, the contacts thus accomplished offer the noteworthy advantage of being supraconductors, which makes it possible to integrate them into cryoelectrical devices.

Below we will illustrate the implementation of the method according to the invention with reference to the attached figures where:

FIG. 1 represents a cross-section of two conductors in accordance with the invention prior to being placed in contact with each other;

FIG. 2 shows the two bare conductors in a cross-section after the connection has been established.

Referring now to FIG. 1, we can see, in a cross-section, a microcircuit which includes a substrate 1, on which are arranged the terminal lugs, such as 2, made up of a layer of chrome. We cover this deposit of chrome with a thin layer of gold 3, particularly through evaporation or pulverization in a vacuum. In the case shown in FIG. 1, the outside conductor is made up of a layer of copper 4, covered successively by a layer of copper 5 and a thin layer of gold 6. The outside conductors can also be made up of wires consisting of gold, gold-plated copper, or any other support covered with gold or silver.

We first of all submerge, in a mercury bath, the terminal lugs of the microcircuit and the ends of the outside conductors for a very short time on the order of only a few seconds. This immersion leads to the formation of a gold-mercury amalgam which is strongly linked to each of the terminal lugs as well as to each of the outside conductors.

After withdrawing the microcircuit and the outside conductors from the mercury bath, a slight surplus of mercury wets the previously formed amalgams and constitutes meniscuses 7 and 8 on these surfaces; each meniscus adheres very strongly to the amalgam because of the surface tensions and, furthermore, it does not protrude beyond the exterior of the terminal lug or of the conductor on which it is formed.

We then proceed to the connection operation as such as shown in FIG. 2. For this purpose it suffices purely and simply to unite the meniscus 8, formed on each of the outside conductors, with the meniscus 7, connected to the terminal lug of the microcircuit corresponding to said conductor. In the course of this operation, the outside conductors by themselves line up with the terminal lugs due to the action of the surface tensions between the mercury meniscuses, so that we thus accomplish excellent electrical contact and so that we can avoid any risk of a short circuit with the neighboring terminal lugs, the two meniscuses 7 and 8 then being fused into a single meniscus 9.

Conversely, if we want to disconnect the outside connectors from the microcircuit, it suffices purely and simply to withdraw said conductors each of which, as well as the terminal lugs, retains the previously formed mercury meniscus.

It is thus possible, as desired, to proceed in a particularly simple fashion to the accomplishment or to the rupture of contacts between the microcircuit on the one hand, and the outside conductors, on the other hand.

We note that, in the case where the microcircuits thus obtained are intended to function at ambient temperature in an industrial environment which generates shocks, vibrations, or miscellaneous forces, the outside conductors can advantageously be maintained in the desired position relative to the terminal lugs by a very simple mechanical mounting or by any other suitable means.

On the other hand, in the case where such microcircuits are intended to function at very low temperatures, lower than the solidification temperature of mercury (−39°C), the use of the above-mentioned mechanical mounting proves pointless. Besides, in the particular case where the microcircuits are made to function at very low temperatures on the order of 4.15°K, the contacts accomplished by the mercury and the amalgam become supraconductors, which offers a considerable advantage in the case where the microcircuits are incorporated in cryoelectrical devices.

What is claimed is:

1. Method for obtaining non-permanent electrical connections at ambient temperatures comprising coating each of the conducting members to be connected together with a thin layer of a metal capable of constituting an amalgam with mercury, forming, on each of said members, an amalgam topped with a thin film of mercury in the form of a meniscus with a small curvature by placing each of said members in contact with a surplus of mercury with respect to the quantity that is stoichiometrically necessary for the constitution of the amalgam, and juxtaposing the mercury meniscuses formed, respectively, on the members to be connected adjacent each other without applying pressure therebetween.

* * * * *