United States Patent

Gartner

[15] **3,702,070**

[45] **Nov. 7, 1972**

[54] **SEQUENTIAL SIGNAL PRODUCING MEANS**

[72] Inventor: **Klaus W. Gartner,** Palos Verdes Peninsula, Calif.

[73] Assignee: **Peter Phillips,** Gardena, Calif. ; a part interest

[22] Filed: **Feb. 19, 1971**

[21] Appl. No.: **116,909**

[52] **U.S. Cl.**.....**70/278,** 70/DIG. 51, 200/4, 250/219 DD, 250/229, 317/134, 340/149

[51] **Int. Cl.** **E05b 47/00**

[58] **Field of Search**..70/277, 278, DIG. 51; 317/134; 340/147, 149; 200/4; 250/229, 219 DD

[56] **References Cited**

UNITED STATES PATENTS

1,323,716	12/1919	Nelson	200/16 A
977,337	11/1910	Soley	70/332 X
3,286,096	11/1966	Finlay	250/229 X
3,582,890	6/1971	Rivers	340/149

Primary Examiner—Albert G. Craig, Jr.
Attorney—Miketta, Glenny, Poms & Smith

[57] **ABSTRACT**

The means has a housing with a cover and mating two portion back wall, with one portion mounting a light and a plurality of photo-electric cells, each in a distinct position around the light, with a dial member rotatably and slidably mounted to the housing, extending between the light and photo-electric cells to block the passage of light therebetween except through a single port in the dial member which is rotatable to each distinct portion and slidable into and out of alignment with the light and a respective cell to product a sequential signal, and with the other portion mounting a light centrally located in a reflector member to direct the light rays to each of a plurality of photo-electric cells, with a patterned card being insertable between the reflector member and cells to pass light, only to preselected cells to produce the sequential signal, with such signal from either portion being sent to a means discriminately receiving a sequential signal. Mating ratchet teeth may be provided on the housing and dial member to insure the positioning of the port in a distinct position, to prevent rotation in the aligned position, and to cam the dial to the non-aligned position upon attempted rotation in the aligned position. Each portion of the back wall may be mounted to a separate cover to provide only the combination portion or card portion of the means.

20 Claims, 9 Drawing Figures

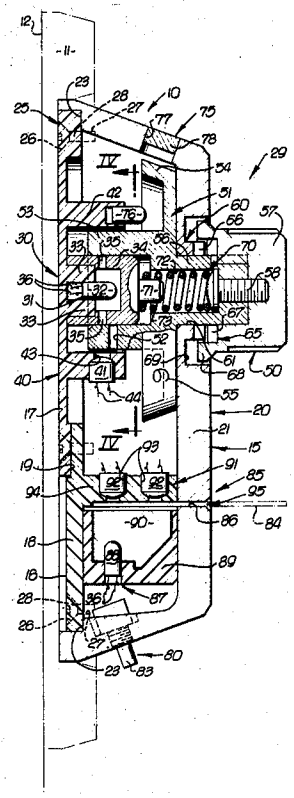

FIG. 1.

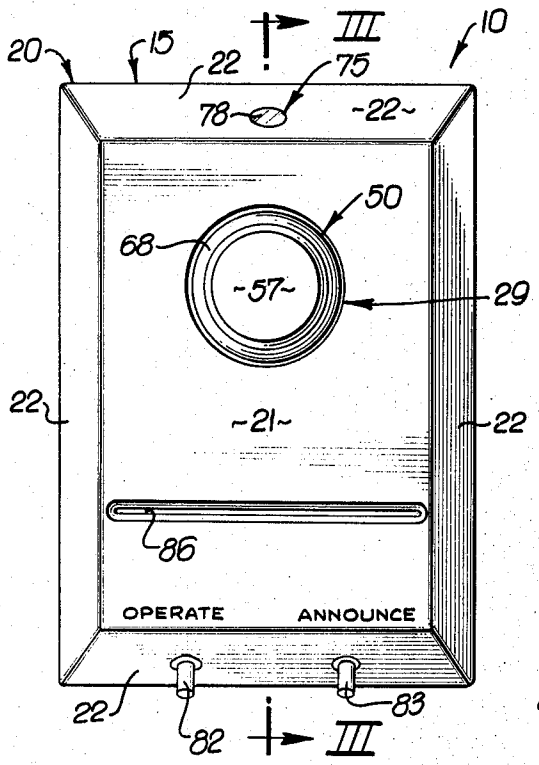

FIG. 2.

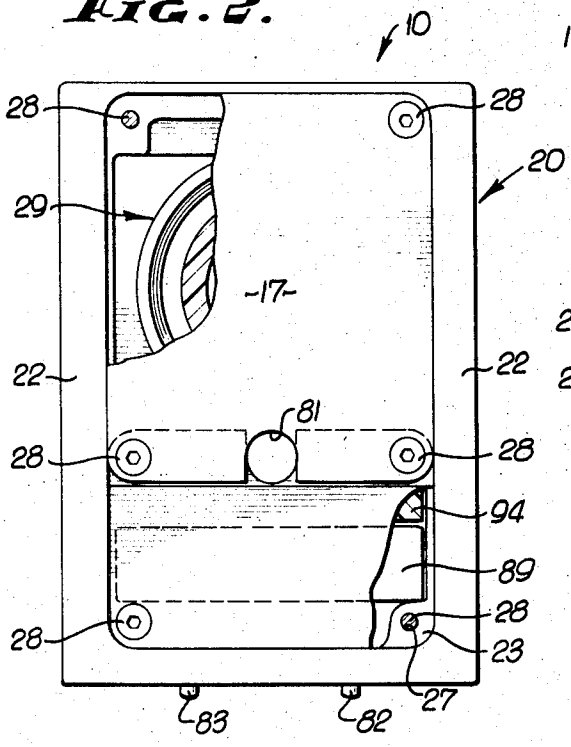

FIG. 3.

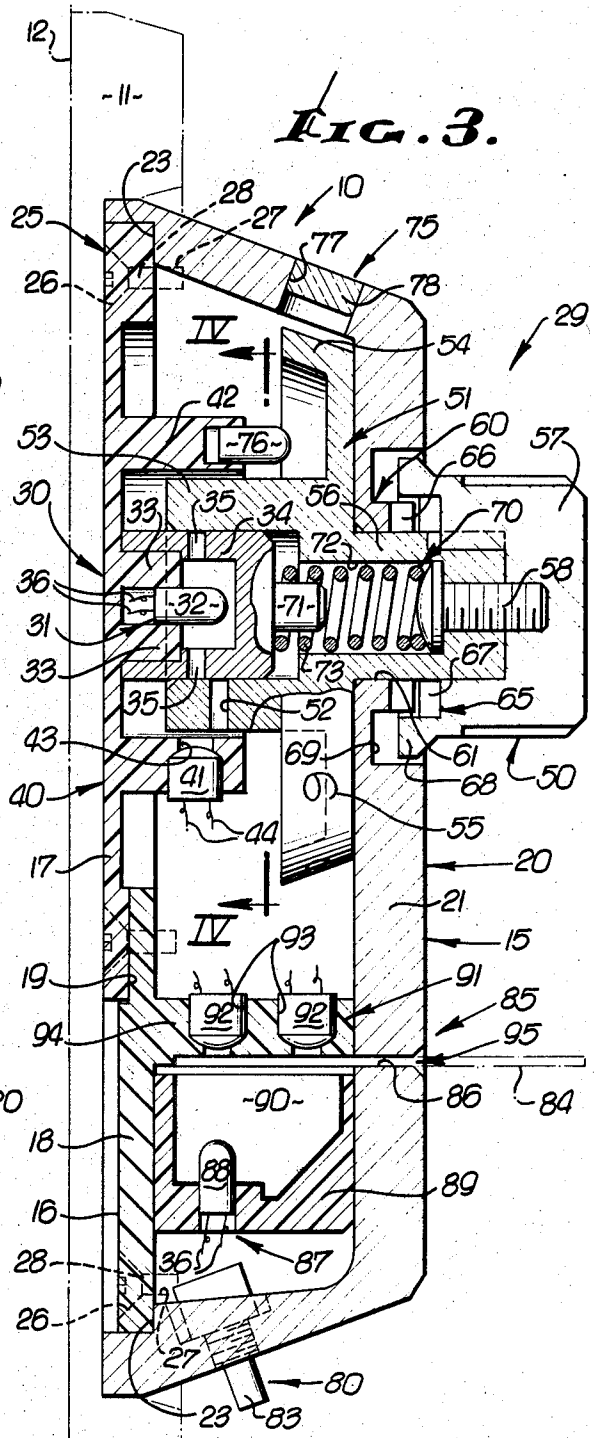

INVENTOR.
KLAUS W. GARTNER
BY
Miketta, Glenny, Pons & Smith
ATTORNEYS.

FIG. 4.

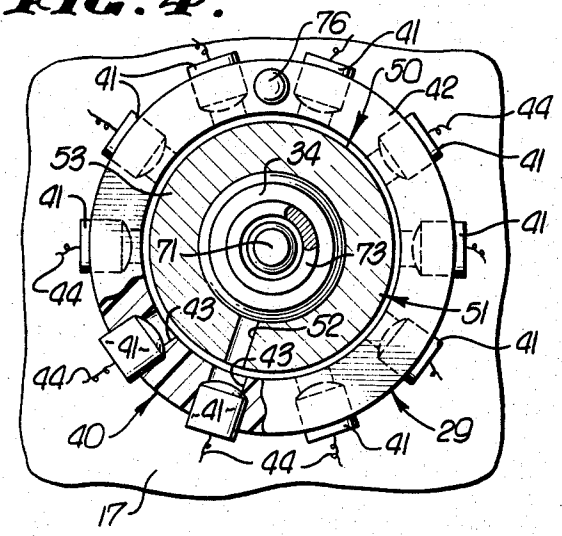

FIG. 5.

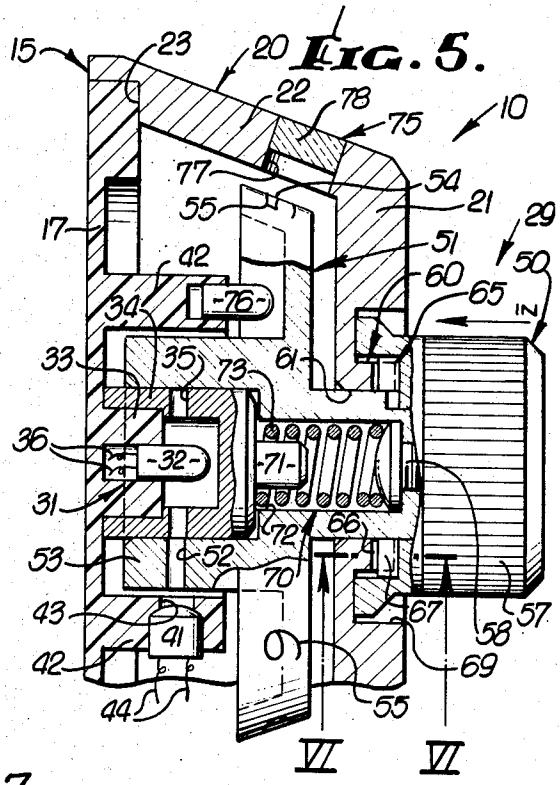

FIG. 7.

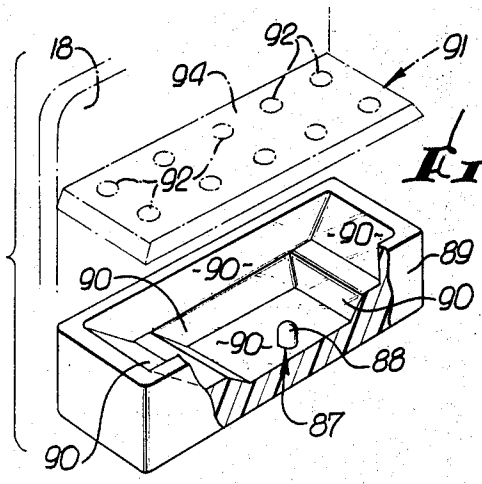

FIG. 6.

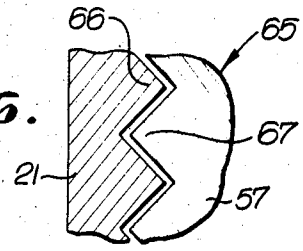

FIG. 9.

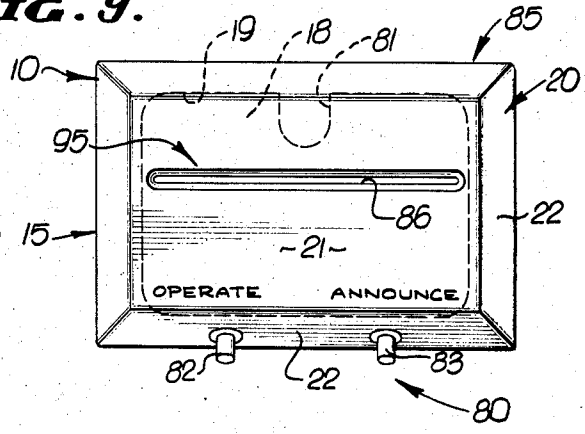

FIG. 8.

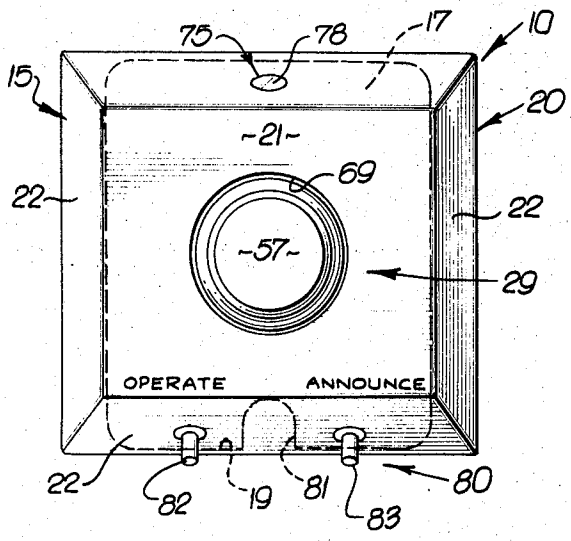

INVENTOR.
KLAUS W. GARTNER
BY
Miketta, Glenny, Pone & Smith
ATTORNEYS.

SEQUENTIAL SIGNAL PRODUCING MEANS

BACKGROUND OF THE INVENTION

This invention relates to an actuator means for producing a sequential signal to open an electrically controlled lock and more particularly to such an actuator means which requires movement in two separate modes to produce the sequential signal.

There has long been a need for an easily operated actuator for controlling electrically operated locks used with safes, doors, and the like. An example of such a need would be in high security office buildings, wherein the doors to high security areas are kept locked by electrical sequential signal controlled locks, except when the doors are opened to permit passage of personnel, and then upon closing, the doors are relocked. The personnel who have access to these high security areas, will pass through these doors many times a day and each time must unlock the door. To ease the burden of unlocking such doors, key or card actuators are used, but these actuators are not particularly secure as the key or card can be forcibly or otherwise taken from an authorized person.

A combination actuator is not subject to such a theft, for the "key" is kept in the mind of the authorized personnel. However, the heretofore used mechanical combination actuators have been subject to being picked by feeling the tumblers drop, hearing the tumblers drop or by disassembling the lock to observe the wear pattern or tumbler opening locations. A combination actuator for use in a high security area should not be able to be picked by any of the above techniques.

BRIEF DESCRIPTION OF THE INVENTION

It is therefore the primary object of this invention to disclose and provide a novel actuator means for producing a sequential electronic signal which can not be "picked" by heretofore known methods, which cannot be discovered by merely disassembling the lock and which can be operated only on a preselected number and motion sequence.

Other and additional objects of this invention are to provide such a means which can be opened by combination but which gives no indication of what the combination is, and which will, upon being manipulated to other than the proper combination, provide a warning that the means is been tampered with, to provide such a means which can be operated by a patterned member such as a card, to provide such a means which can be completely removed and yet will not indicate the combination or produce the sequential signal, to provide such a means which is economical to produce, easy to install, easy to operate and virtually impossible for an unauthorized person to open.

Generally the means for generating a preselected sequential signal to be sent to a means for discriminately receiving a sequential signal includes a manually movable actuator control means for movement between distinctive positions and for association with a housing having sensing means mounted thereto for sensing respective distinct positions of the actuator control means when in such a respective distinct position and aligned with the sensing means, with a mounting means mounting the actuator control means to the housing in association with the sensing means for movement in at least two modes, the control means

moving in one mode between distinct positions and in the other mode between a non-aligned position out of exact alignment with the sensing means, the actuator control means being movable in the one mode to a preselected distinct position and then being movable in the other mode from the non-aligned position to the aligned position for actuating the sensing means, the actuator control means then being movable in the other mode back to the non-aligned position for movement to a second preselected sequential signal. The means may include means for sensing the presence of a properly patterned member and for producing the preselected sequential signal in response thereto.

The housing may include a cover and a two-portion back wall. The sensing means may include a source of energy, such as a light, and receivers of energy, such as photo-electric cells, with the actuator control means including a dial member with a single energy path such as a port therethrough. A guide means may be provided to insure the location of the control means in one of the distinct positions, to prevent movement of the control means in the aligned position in the one mode, and to cammingly move the control means to the non-aligned position upon attempted movement thereof in the one mode in the aligned position. Biasing means may be provided for biasing the control means to the non-aligned position. Illuminating means may be provided for illuminating the indicia on the control means. Switch means may be provided for energizing the sensing means.

BRIEF DESCRIPTION OF THE DRAWINGS

FIG. 1 is a front elevational view of the sequential signal producing means, according to this invention.

FIG. 2 is a fragmentary back elevational view of the means of FIG. 1.

FIG. 3 is a side-cross sectional view taken along the plane III—III of FIG. 1, showing the internal construction of the means, with the dial member thereof located in the non-aligned position.

FIG. 4 is a fragmentary cross-sectional view taken along the plane IV—IV of FIG. 3, showing the light, the photo-electric cells, and the cylindrical wall of the dial member with a single port therethrough.

FIG. 5 is a fragmentary cross-sectional view of a portion of FIG. 3, but showing the dial member located in the aligned position.

FIG. 6 is a fragmentary view taken along the plane VI—VI of FIG. 5, showing the cooperation of the mating ratchet teeth on the housing and dial member.

FIG. 7 is an exploded perspective view of the reflector member of the patterned member sensing means, with the back wall and ledge thereof shown in phantom lines.

FIG. 8 is a front elevational view similar to FIG. 1, but showing an alternative embodiment of the means having the combination portion only; and

FIG. 9 is a front elevational view similar to FIG. 1, but showing another alternative embodiment of the means having the patterned member portion only.

DETAILED DESCRIPTION OF THE PREFERRED EMBODIMENT

Referring now to the drawings, and particularly to FIG. 1, the means according to this invention for

generating a preselected sequential signal to be sent to a means for discriminately receiving a sequential signal (not shown) is generally denoted by the number **10**.

As seen in FIG. **3**, the means **10** may be mounted to a frame **11** on a wall or other flat surface **12**. The means **10** is for electrical connection to a means for discriminately receiving a sequential signal, preferably in accordance with the teachings such as is illustrated in Swannick U.S. Pat. No. 3,411,046, entitled "Electronic Combination Lock System," and Curry U.S. Pat. No. 2,562,176, entitled "Electrical Selective Control Apparatus." The means for discriminately receiving a sequential signal, upon receipt of such a signal will perfom a desired function such as unlock a door, turn on a machine, etc.

Generally, the means **10** according to this invention includes a hollow housing **15** with a back wall **16** and a mating cover **17**, a combination portion **29** with a sensing means **30** including a source **31**, a plurality of receivers **40**, an actuator control means **50** for movement between distinct positions, with the sensing means **30** sensing respective distinct positions of the control means **50** when the control means **50** is aligned with the sensing means **30**, and mounting means **60** for mounting the control means **50** to the housing **15** for movement in at least two modes, with the control means **50** moving in one mode between distinct positions, and in the other mode between an aligned position, aligned with the sensing means **30**, and a non-aligned position, out of alignment with the sensing means **30**.

The means **10** may include guide means **65** for insuring that the control means **50** is in one of the distinct positions when in the aligned position, for blocking movement in the one mode when in the aligned position and for cammingly moving the control means **50** in the other mode when movement is attempted in the one mode in the aligned position. The means **10** may also include biasing means **70** for biasing the control means to the non-aligned position, illuminating means **75** for illuminating indicia **55** on the control means **50**, energizing means **80** for energizing the source **31** of the sensing means **30**.

A patterned member portion **84** may be provided in the housing **15** of a patterned member presence sensing means **85** including a source **87**, a plurality of receivers **91** and a card receiving space **95** therebetween for sensing the presence of a properly patterned member (not shown) to generate the signal.

The hollow housing **15** for mounting the sensing means **30** and the actuator control means **50** in association with each other, is best seen in FIGS. **1**, **2** and **3**.

Referring now to FIG. **3**, the hollow housing **15** has a back wall **16** made up of an upper portion **17** and a lower portion **18**. Each portion **17** and **18** have, as seen in FIG. **3**, a mating notch **19** along the adjacent edges thereof to permit the joining of these two portions. The open-backed cover **20** has a front wall **21** and integral therewith four sloping sidewalls **22**, which together form a rearwardly opening cavity closed by the upper and lower portions **17** and **18** of the back wall **16**, when seated on shoulders **23**, formed in the sidewalls **22** adjacent the rear edge thereof.

Attaching means **25** is provided for attaching the two portions **17** and **18** of the back wall **16** to the cover **20**. In the preferred embodiment, the attaching means **25** includes countersunk holes **26** in the upper and lower portions **17** and **18**, and tapped holes **27** in the sloping sidewalls **22**, opening to the shoulders **23** with the flat Allen-head screws **28** extending therethrough to secure the back wall **16** to the cover **20** to form the hollow housing **15**.

The combination portion **29** of the means **10** includes the sensing means **30**, control means **50**, mounting means **60**, guide means **65**, biasing means **70**, illuminating means **75**, and energizing means **80** which will now be described in detail.

The sensing means **30** for sensing a respective distinct position of the actuator control means **50** when the actuator control means **50** is in such a respective distinct position and aligned with the sensing means **30**, includes a source **31** of energy for being operatively joined to a respective receiver **40** of energy by the actuator control means **50**.

As best seen in FIGS. **3**, **4** and **5**, the source **31** of the preferred embodiment includes a central light **32** mounted in the centrally located cavity of a boss **33** in the upper portion **17** to protrude forwardly therefrom. A cover **34** is located over the central light **32**, and frictionally secured to the boss **33**. The cover **34** is provided with a plurality of circumferential equally spaced holes **35** therethrough, one for each of the distinct positions of the control means **50**. The source **31** is completed by the provision of wires **36** extending from the central light **32**.

The sensing means **30** also includes a plurality of receivers **40**, which in the preferred embodiment are photo-electric cells **41**. The upper portion **17** of the back wall **16** has around the boss **33**, a cylindrical wall **42** which has a plurality of radial holes **43** into each of which a photo-electric cell **41** is mounted, with the wires **44** from the photo-electric cell extending outwardly. The holes **43** are circumferentially equally spaced and equal in number to the number of holes **35** so that when the holes **35** and **43** are radially aligned, the light rays from the central light **32** may pass through each of the holes **35** to be received by the photo-electric cell in the hole **43** aligned therewith. The passage of these light rays will be regulated by the actuator control means **50**.

The actuator control means **50** in association with the sensing means **30** is best seen in FIGS. **3** and **5**. In the preferred embodiment, the actuator control means **50** includes a dial member **51** having a cylindrical lower wall **53** sized for location between the cylindrical wall **42** and the centrally located boss **33** with the cover **40** thereon. The cylindrical wall **53** has a single port **52** therethrough for a purpose which will appear later. Extending radially outwardly from the upper end of the cylindrical wall **53** is a skirt **54** which is provided with a plurality of indicia **55**, typically numbers, one for each of the distinct positions. Extending from the upper surface of the skirt **54**, forwardly along the axis of the cylindrical wall **53** is an axle **56** on the outer end of which a knob **57** is received and secured thereto by a screw **58**.

The means **60** for movably mounting the actuator control means **50** to the housing **15** in association with the sensing means **30** for movement in at least two modes, includes an aperture **61** in the front wall **21** of

the hollow housing 15. The aperture 61 is sized so as to slidably and rotatably mount around the axle 56 of the dial member 51. The dial member 51, when located in the housing 15, is free to rotate in one mode between a plurality of distinct positions and to slide in another mode between an aligned position as shown in FIG. 5, wherein the port 52 is aligned in the plane of the holes 43 and 35 of the sensing means 30 and a non-aligned position as shown in FIG. 3, wherein the port 52 is out of alignment with the plane of the holes 43 and 35 of the sensing means 30.

The dial member 51 of the actuator control means 50 is for being manually rotated to a preselected distinct position, while in the non-aligned position, by observing the indicia 55 on the skirt 54 thereof and then for being slid from the non-aligned position as shown in FIG. 3 to the aligned position as shown in FIG. 5, wherein the port 54 is located between the respective hole 35 and the respective hole 43 so that light rays may pass from the central light 32 through the respective hole 35, through the port 52, to be received by the respective photo-electric cell 41 which generates a signal in response thereto. Then, the dial member 51 is returned from the aligned position, as shown in FIG. 5, to the non-aligned position, as shown in FIG. 3, for being rotated to another preselected position and again for being moved to the aligned position, for actuating another photo-electric cell 41. These movements are repeated as many times as may be necessary to produce the preselected sequential signal.

Guide means 65 is provided in the preferred embodiment for moving the dial member 51 to the closest distinct position upon movement thereof to the aligned position, for preventing rotation of the dial member 51 when in the aligned position, and for cammingly moving the dial member 51 from the aligned position to the non-aligned position upon attempted rotation of the dial member 50 in the aligned position.

As best seen in FIGS. 3, 5 and 7, the guide means 65 of the preferred embodiment include ratchet teeth 66 cut in the front wall 21 around the aperture 61 and mating ratchet teeth 67 cut in the inner face of knob 57. It is contemplated that a like member of ratchet teeth 66 and 67 will be provided, with this number equal to the number of distinct positions of the sensing and control means 30 and 50 to provide positive alignment of the port 52 of the dial member 51 between the holes 35 and 43 of the source 31 and receiver 40, while at the same time, not causing a wear pattern on the teeth 66 and 67, which would indicate these selected distinct positions. The guide means is completed by the provision of a skirt 68 on the knob 57 which extends into an annular groove 69 around the aperture 61 to hide the ratchet teeth 66 and 67 and thereby prevent dirt or other contaminants from lodging therebetween.

As best seen by comparing FIGS. 3 and 5, upon movement of the dial member 51 from the non-aligned position to the aligned position, the ratchet teeth 67 will move rearwardly with the knob 57 into engagement with the ratchet teeth 66, to rotate the dial member 51, if required, slightly, until the ratchet teeth mate, as shown as in FIG. 6. This slight rotational movement will move the dial member 51 to the closest distinct position. The mating of the ratchet teeth 66 and 67, as seen in FIG. 6, prevents rotation of the dial member 51 in the aligned position, and upon attempted rotation thereof in the aligned position, the sloping surfaces of ratchet teeth 66 will cam the ratchet teeth 67, forwardly to slide the dial member 51 from the aligned position to the non-aligned position. Thus the guide means 65 presents rotation of the dial member 51 in the inwardly aligned position, and cams the dial member 50 upon such rotation to the non-aligned position.

The preferred embodiment of the means 10 is also provided with biasing means 70 for biasing the control means 50 to the non-aligned position. As best seen in FIGS. 3 and 5, the biasing means 70 includes a forwardly extending pin 71 on cover 34 and a rearwardly opening cavity 72 in the axle 56, with a spring 73 having one end seated on the pin 71 and the other end seated in the forward end of the cavity 72. The spring 73 biases the dial member 51 forwardly so that, the action of the spring 73 must be overcome to move the dial member 51 from the non-aligned position to the aligned position, and upon release of the dial member 51 in the aligned position, the spring 73 will return the dial member 51 to the non-aligned position.

The means 10 in the preferred embodiment is also provided with illuminating means 75 for illuminating the indicia 55 on the skirt 54. Illuminating means 75 of the preferred embodiment includes a forwardly protruding light 76 mounted in the forward facing annular surface of the cylindrical wall 42 along the vertical radius thereof. A hole 77 is provided in the upper sidewall 22 and contains a transparent window 78 so that the light rays from the light 76 pass through the skirt 54 of the dial member 51 to outline the aligned indicia 55 enabling it to be seen through window 78.

The means 10 also includes energizing means 80 for energizing the source of energy of the sensing means 30 and for energizing the light 76 of the illuminating means. As best seen in FIGS. 1 and 3, the energizing means 80 includes a hole 81 in the back wall 16 at the juncture of the upper and lower portions 17 and 18, through which electrical wires, such as wires 36 and 44 extend. One of the light wires 36 is connected to a switch 82 mounted in the lower sloping sidewall 22 of the housing 15. Another switch 83 is also located in the lower sloping sidewall 22 for operating a speaker or other device to announce the presence of a person. By operating the switch 82, the sensing means 30 and the illuminating means 75 are turned on, to permit the rotation of the dial member 51 to the preselected distinct positions and the sliding of the dial member 51 to the aligned positions to generate the sequential signal for transmission to a means for discriminatingly receiving a sequential signal.

The preferred embodiment of the means 10 also includes the provision of a pattern member portion 84 with a patterned member presence sensing means 85. The pattern member (not shown) could be any type of a pattern member. A card has been selected as an illustration of a properly patterned member which could be easily used for actuating the patterned member sensing means 85. The addition of the patterned member portion 84 to the combination portion 29 of the means 10 brings with it all of the problems associated with such a patterned member portion such as the possibility of theft of the pattern member, etc. However, by provid-

ing an actuator **10** which has both the combination portion **29** and the patterned member portion **84**, the possession of the card which opens the means **10**, may be restricted to a limited number of persons, who pass into and out of the restricted or secure area frequently so that the speed and convenience card entry is worth the risks. All other persons who are permitted to enter the area, would use the combination portion **29**, thereby keeping the possibility of theft of the card to a minimum.

As best seen in FIGS. **1** and **3**, the sensing means **85** includes a slot **86** in the lower portion of a front wall **21** suitable for the passage of a properly patterned card to the interior of the housing **15**. The member presence sensing means **85** includes a source **87** of energy which in the preferred embodiment is a light **88** mounted in a reflector member **89** having reflective surfaces **90** which reflect the light rays from the light **87**, in a multiplicity of distinct vertical paths. The reflector member **89** is mounted to the lower portion **18** of the back wall **16** below the location of the slot **86**.

As best seen in FIGS. **3** and **7**, the receiver **91** of the sensing means **85** for receiving energy from the source **87** includes a plurality of photo-electric cells **92** mounted in holes **93** in a forwardly protruding ledge **94** of the lower portion **18** of the back wall **16**. A card receiving space **95** separates the receiver **91** from the source **87** so that the insertion of a properly patterned card through the slot **86** and into the card receiving space **95** interrupts the passage of vertical light rays except for those in preselected locations, which operate preselected photo-electric cells to generate the preselected signal for sending to the means for discriminately receiving a sequential signal.

Thus the means **10** according to this invention can either be operated by rotating of the dial member **51** to preselected distinct positions and sliding the dial member **51** to the aligned position in the proper combination of steps or can be operated by the insertion of a properly patterned card. In either event, some or all of the photo-electric cells, not in the preselected positions, could be attached to an alarm system, so that anyone not knowing the combination or not having the proper card, will sound an alarm. This will help prevent random discovery of the patter required to operate the means **10**.

Another advantage of the construction according to this invention, is shown in FIGS. **8** and **9**. If extreme security requirements dictate the provision of the means **10** with only the combination portion **29**, a cover **20** is provided which mounts only the upper portion **17** of the back wall **16** utilizing the sensing means **30**, actuator control means **50**, mounting means **60**, guide means **65**, biasing means **70**, illuminating means **75**, and energizing means **80** without any changes in the construction of these means.

Likewise, the means **10** may be provided only with the member presence sensing means **85** only. In such a construction, the lower portion **18** of the back wall **16** is combined with a cover **20** of a slightly smaller size and which has a slot **86** in the front wall **21** thereof with the energizing means **80**, the source **87**, and the receivers **91** all being of identical construction to that used in the combined means **10**.

In the preferred embodiment, the sensing means **30** include a light **32** and photo-electric cells **41** with the dial member **51** of the control means **50** selectively passing light rays therebetween to generate the preselected sequential signal. It is certainly within the contemplation of this invention to use other types of sensing means **30** and control means **50** such as, for example, mechanical elements or electrical switches closed or opened by the two mode operations of a suitable control means **30**.

Thus, the means **10** according to this invention meets all of the objects of this invention to provide a preselected sequential signal to be sent to a means for discriminately receiving this signal.

I claim:

1. In a means for generating a preselected sequential signal to be sent to a means for discriminately receiving a sequential signal, said mechanism including a manually movable actuator control means for movement between distinct positions and for association with a housing having a sensing means mounted thereto for sensing a respective distinct position of the actuator control means when the actuator control means is in such a respective distinct position and aligned with the sensing means, the improvement comprising:

means for movably mounting the actuator control means to the housing in association with the sensing means for movement in at least two modes, the actuator control means moving in one mode between distinct positions, and in the other mode between an aligned position, aligned with the sensing means, and a non-aligned position, out of alignment with the sensing means, said actuator control means being movable in the one mode to a preselected distinct position while in the non-aligned position and then being movable in the other mode from the non-aligned position to the aligned position for actuating the sensing means, said actuator control means then being movable in the other mode, back to the non-aligned position and being movable in the one mode to another preselected position for actuating the sensing means again, these movements being repeated as many times as necessary, to produce the preselected sequential signal.

2. The means as in claim **1** additionally comprising:

means mounted in the housing for sensing the presence of a properly patterned member and for producing the preselected sequential signal in response to the presence of the properly patterned member.

3. The means as in claim **1** wherein the housing includes a back wall mounting the sensing means and a mating open-backed cover for mounting the actuating means.

4. The means as in claim **3** wherein the back wall is divided into a first and second portion for mating with the cover and with each other to close the open backed cover, said first back wall portion mounting the sensing means and said second back wall portion mounting a means for sensing the presence of a properly patterned member.

5. The means of claim **4** wherein the back wall portions are matingly notched along the adjoining edges.

6. The means as in claim **1** wherein the sensing means includes:

a receiver of energy for each distinct position of the actuating means,

a source of energy at each distinct position of the actuating means,

said source and said receiver for each respective distinct position being operatively joined by the alignment of the actuator control means therewith, when in said respective distinct position.

7. The means as in claim 1 wherein the source is light, each receiver is a photo-electric cell and the actuator control means includes a wall between the light and the cell, said wall having a port therethrough which is aligned between a respective light and cell when the actuator control means is in the respective distinct position and aligned with the sensing means.

8. The means as in claim 7 wherein a single light is provided, wherein the wall is cylindrical about said single light, and wherein a photo-electric cell is provided for each distinct position to receive light from the single source when the port in the wall is aligned therebetween.

9. The means as in claim 8 wherein the actuator control means includes a dial member with the wall extending therefrom, and wherein the mounting means mounts the dial member for rotative movement in the one mode and for axial movement in the other mode.

10. The means as in claim 1 additionally comprising guide means for guiding the movement of the actuator control means in the one mode to the closest distinct position, while being moved in the other mode to the aligned position, to insure that the control means is in one of the distinct positions when in the aligned position.

11. The means as in claim 10 wherein the guide means is additionally adopted for preventing movement of the control means in the one mode while in the aligned position.

12. The means as in claim 10 wherein the guide means is additionally adopted for moving the control means in the other mode to the non-aligned position, upon attempted movement of the control means in the one mode while in the aligned position.

13. The means as in claim 10 wherein the blocking means includes mating ratchet teeth on the housing and on the actuator control means, the number of said mating ratchet teeth equally the member of the distinct positions.

14. The means as in claim 1 wherein the mounting means mounts the actuator control means to the housing for rotative movement in the one mode and for axial movement in the other mode.

15. The means as in claim 14 wherein the actuator control means includes a dial member having indicia associated therewith indicating the distinct positions and wherein illuminating means is additionally provided for illuminating the indicia.

16. The means as in claim 15 wherein the mounting means includes an aperture in the housing, surrounded by an annular groove, the dial member includes a protruding axle for extension through the aperture in the wall and a knob on the end of the axle to provide for rotating and sliding movement of the dial member relative the housing.

17. The means as in claim 2 wherein the means for sensing the presence of a properly patterned member includes:

a source of energy mounted in the housing;

a plurality of receivers mounted in the housing;

a reflector mounted in the housing for reflecting energy from the source to the receivers along individual paths, said patterned member interrupting these paths in a preselected pattern to produce the signal.

18. In a means for generating a preselected sequential signal to be sent to a means for discriminately receiving a sequential signal, said mechanism including a housing, a dial control member associated with the housing, and a sensing means mounted to the housing for association with the dial control member and for sensing when the dial control member is aligned therewith to generate a signal, the improvement comprising:

means mounting the dial control member for rotation in a plane between a plurality of distinct positions and for movement normal to said plane between an aligned position, aligned with the sensing means, and a non-aligned position out of alignment with said sensing means, said dial control means being rotatable to a preselected distinct position while in the non-aligned position and movable to the aligned position to actuate the sensing means, these movements being repeated to produce the preselected signal.

19. A means for generating a preselected sequential signal to be sent to a means for discriminately receiving a sequential signal, comprising:

a hollow housing for mounting on a wall or other structure, said housing having a back wall and an open-backed cover for matingly receiving said back wall, said back wall being secured to said cover to form said housing,

a source of energy mounted to the back wall,

switch means mounted to the housing and operatively connected to the source of energy for energizing the source in response to operation of the switch means,

a plurality of receivers of energy mounted to the back wall, each of said receivers being located in a distinct position for receiving energy from the source and for producing a signal in response to the receipt of energy,

a dial member for location between the source and each receiver, said dial having a unitary energy path for operatively connecting the source to a respective receiver when the path is located in the respective distinct position and is operatively aligned between the source and the respective receiver, said dial member having indicia for indicating each of the distinct positions,

means mounting the dial member to the housing between the source and the receivers for rotational movement of the dial member and therefore the path thereof, in a plane between the distinct positions and for sliding movement between an aligned position where the path is aligned between the source and the receivers, and a non-aligned position wherein the path is out of alignment between the source and the receivers,

biasing means between the dial member and the housing for biasing the dial member to the non-aligned position,

guide means on said dial member and on the housing for guiding the dial member to the closest distinct

position as the dial is slid to the aligned position, for preventing rotation of the dial member between distinct positions when in the aligned position and for cammingly sliding the dial member to the non-aligned position upon attempted rotation of the dial member in the aligned position, and

illuminating means on the housing and energized by the switch means for illuminating the respective indicia corresponding to the distinct position of the dial member,

said switch means being manually operated to energize the source and the illuminating means,

said dial member being manually rotated to a preselected distinct position, and being manually slid to the aligned position against the biasing of the biasing means, to align the path between the source and the respective receiver to produce a signal whereupon the biasing means slides the dial member back to the non-aligned position and so on until the preselected sequential signal has been produced.

20. The means as in claim **19** wherein the back wall includes two portions matingly joined to form the back wall, one of said portions mounting the source and receivers, and wherein the cover has an opening therethrough for receiving a properly patterned member, and additionally comprising:

a second source of energy mounted on the other of said portions and energized by the switch means;

a second plurality of receivers mounted on the other of said portions, each of said receivers being located in an individual position for receiving energy from the source and for producing a signal in response to the receipt of energy;

a reflector member over said second source for reflecting energy from the second source to the receivers;

means mounting the receivers and the reflector to the back wall for receiving the properly patterned member between the reflector member and the receivers when inserted in the opening, said properly patterned member passing energy from said source to preselected receivers to produce the sequential signal independently of the dial member.

* * * * *