United States Patent

Black et al.

[15] **3,697,933**

[45] **Oct. 10, 1972**

[54] **CONNECTOR BLOCK**

[72] Inventors: **Richard W. Black,** Manchester; **Robert F. Evans,** Harrisburg, both of Pa.

[73] Assignee: **Berg Electronics, Inc.,** New Cumberland, Pa.

[22] Filed: **April 5, 1971**

[21] Appl. No.: **131,349**

[52] **U.S. Cl.**.....**339/192 R,** 339/17 C, 339/217 R

[51] **Int. Cl.** **H01r 23/24,** H05k 1/12

[58] **Field of Search**.....339/17 C, 17 D, 17 LC, 32, 339/33, 176, 191 M, 192, 154, 156, 198, 275 R, 275 B, 275 T, 206 R, 206 P

[56] **References Cited**

UNITED STATES PATENTS

3,601,781	8/1971	Mullin	339/192 R
2,938,187	5/1960	Brodrick et al.	339/31 M
3,384,864	5/1968	Schwartz	339/17 LC
3,487,355	12/1969	Cairns	339/191 M

Primary Examiner—Marvin A. Champion
Assistant Examiner—Lawrence J. Staab
Attorney—Thomas Hooker

[57] **ABSTRACT**

A two row connector block for mounting on a circuit board with two rows of female terminals extending parallel to the circuit board and with a contact tail of each terminal in electrical connection with the circuit board. The terminal cavities in different rows are located one above the other. An insulating spacer is provided to prevent accidental short circuit connections from occurring when contact pins are inserted into the terminals in the row immediately adjacent the circuit board.

7 Claims, 12 Drawing Figures

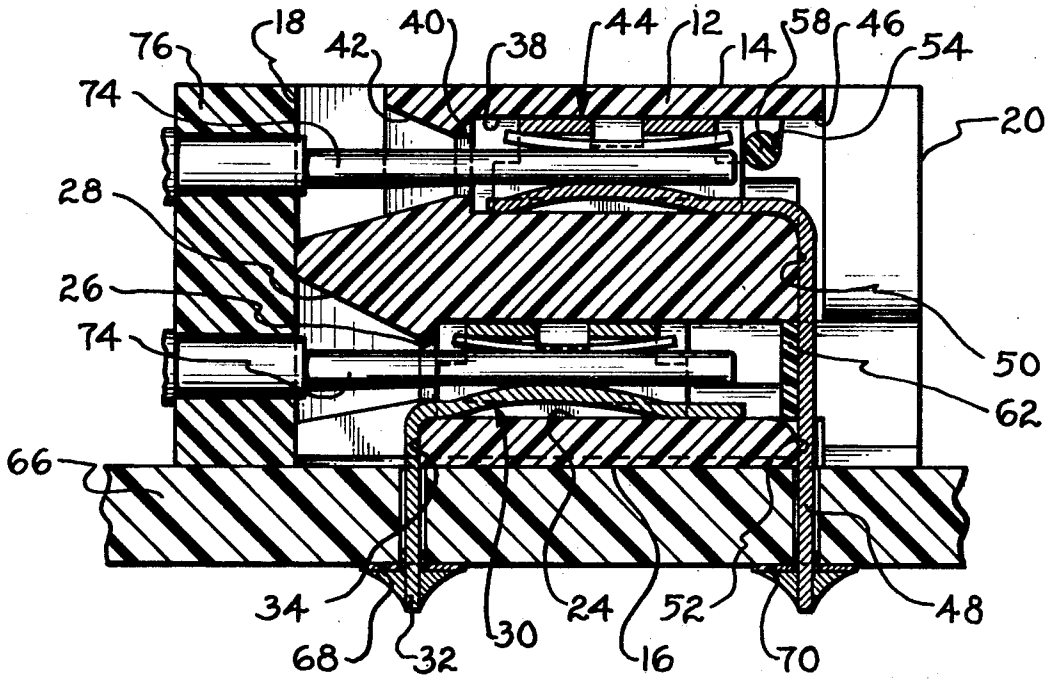

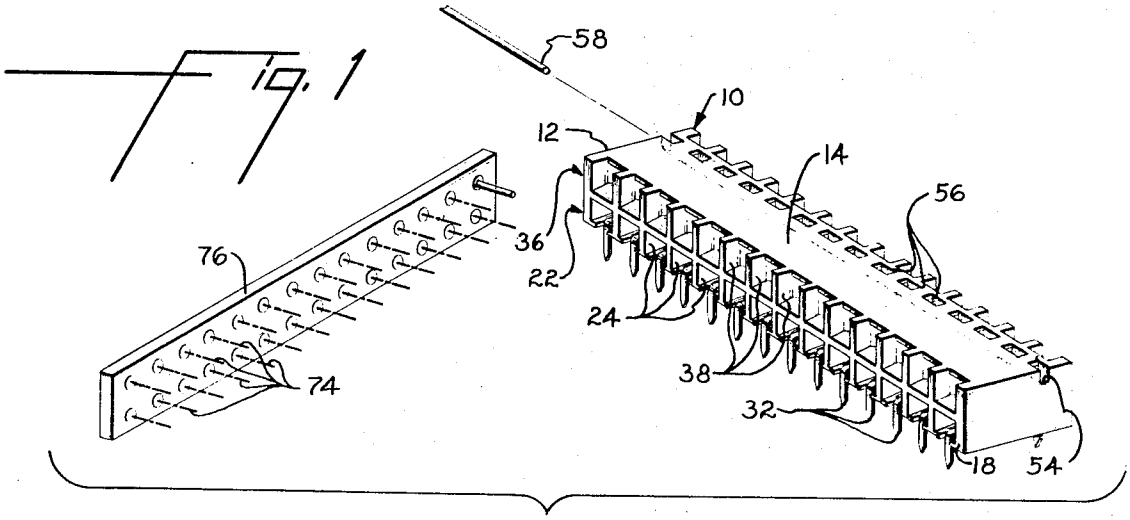

Fig. 1

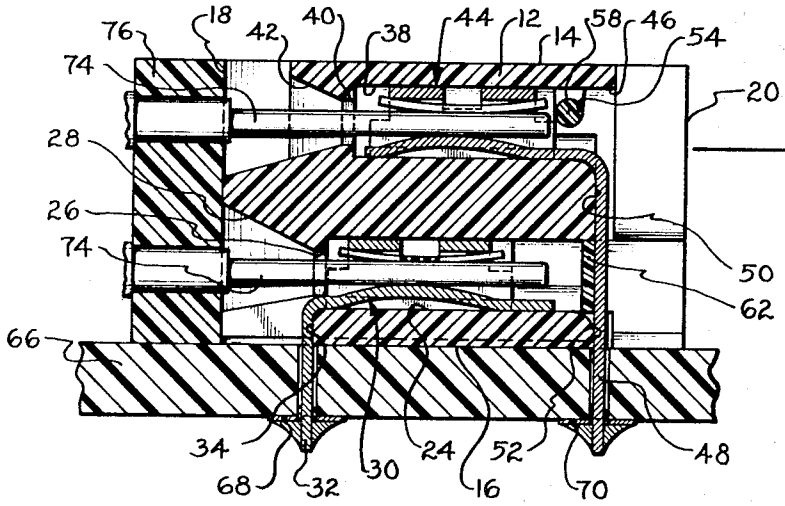

Fig. 2

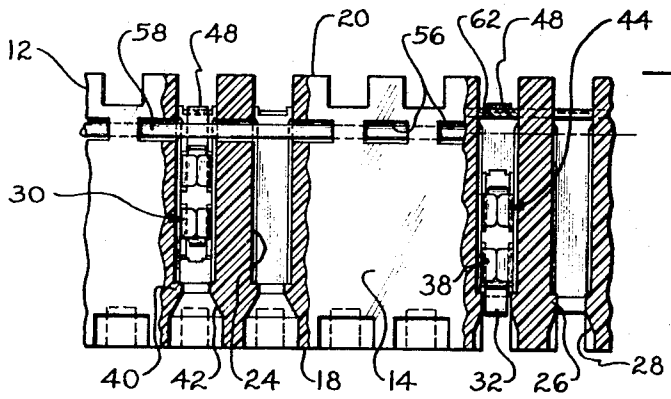

Fig. 3

INVENTOR.
Richard W. Black &
BY Robert F. Evans

THOMAS Hooker,
Their Attorney

Fig. 4

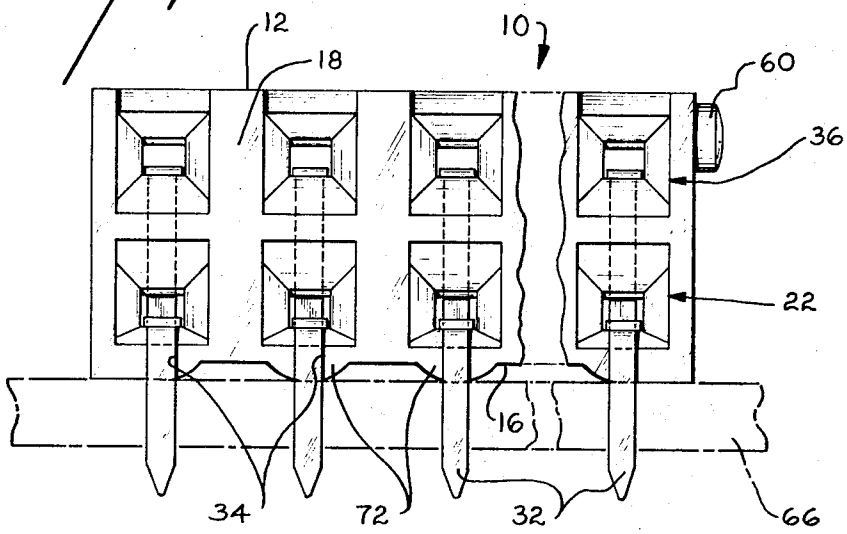

Fig. 5

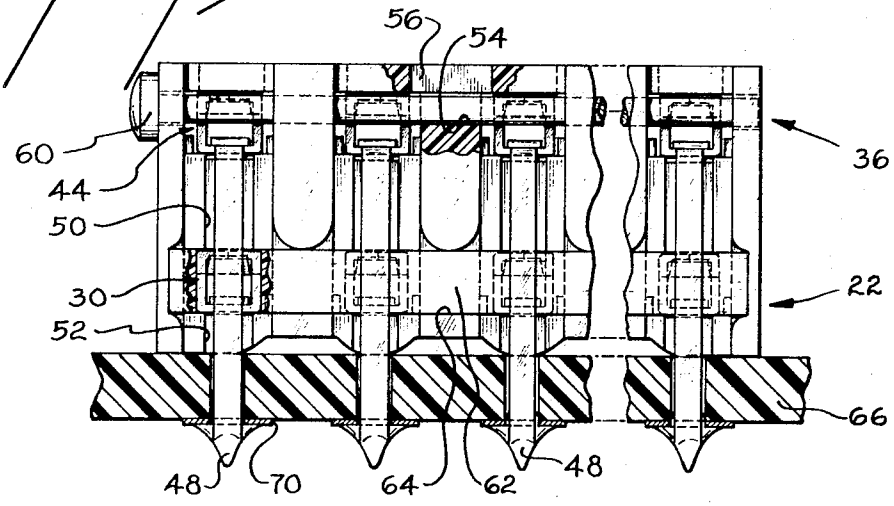

INVENTOR.
Richard W. Black &
Robert F. Evans
BY
THOMAS Hooker,
Their Attorney

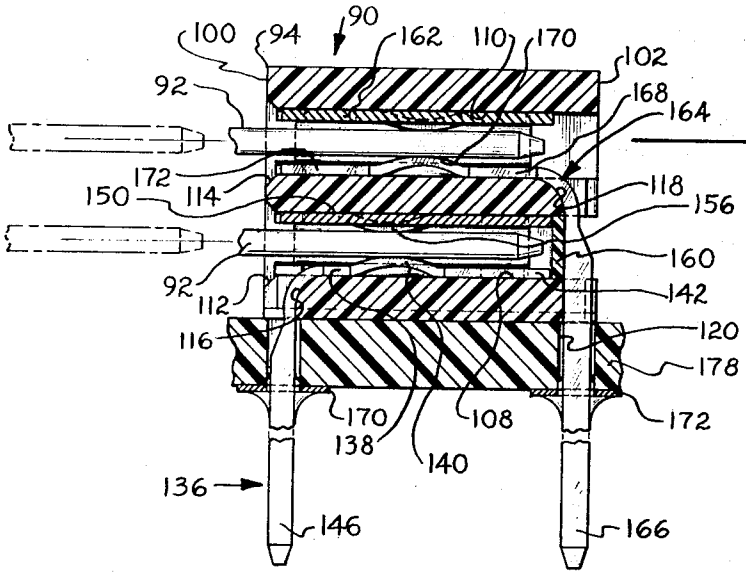

Fig. 8

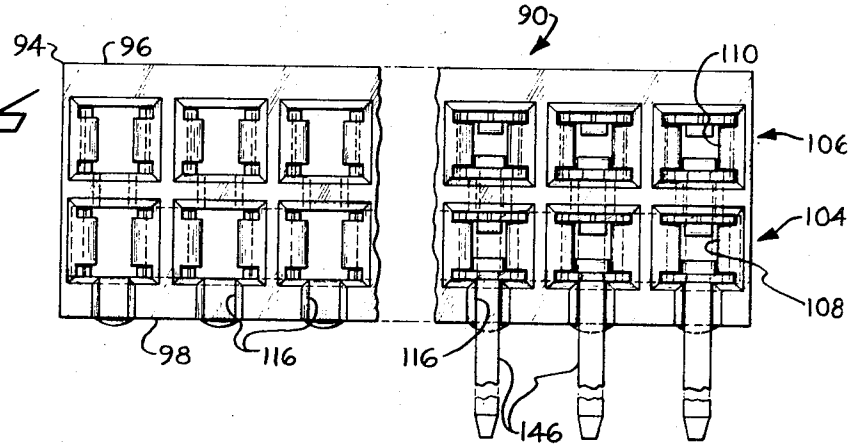

Fig. 6

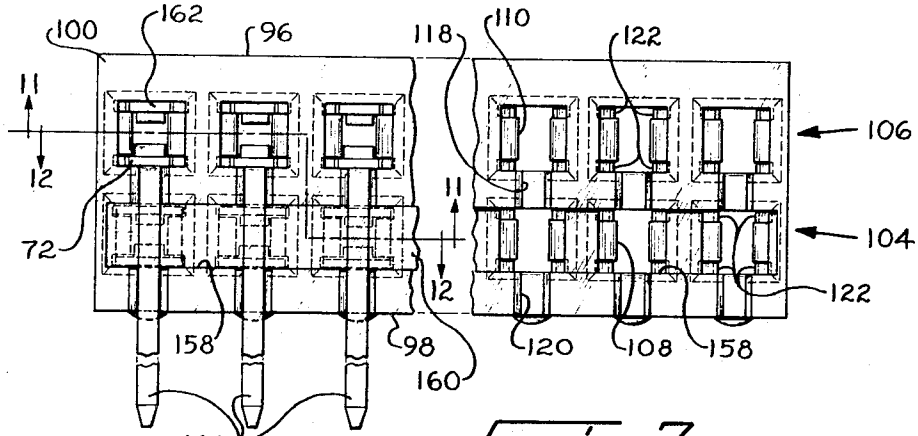

Fig. 7

INVENTOR.
Richard W. Black &
BY Robert F. Evans

THOMAS Hooker,
Their Attorney

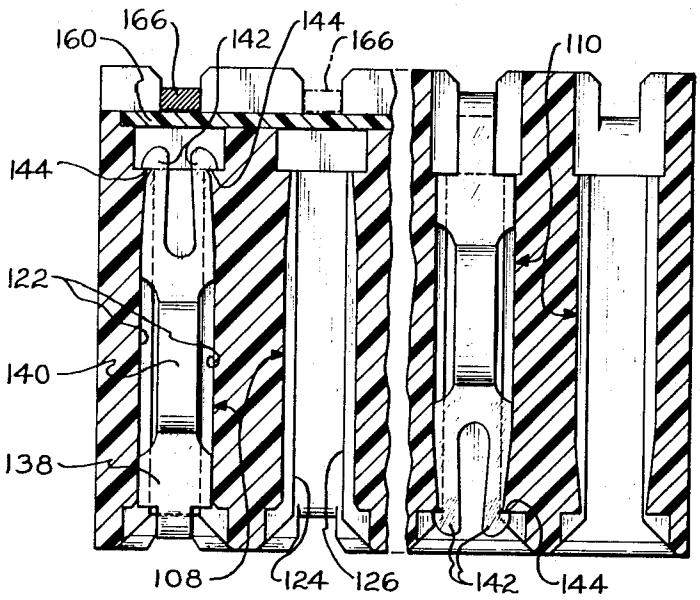

Fig. 9

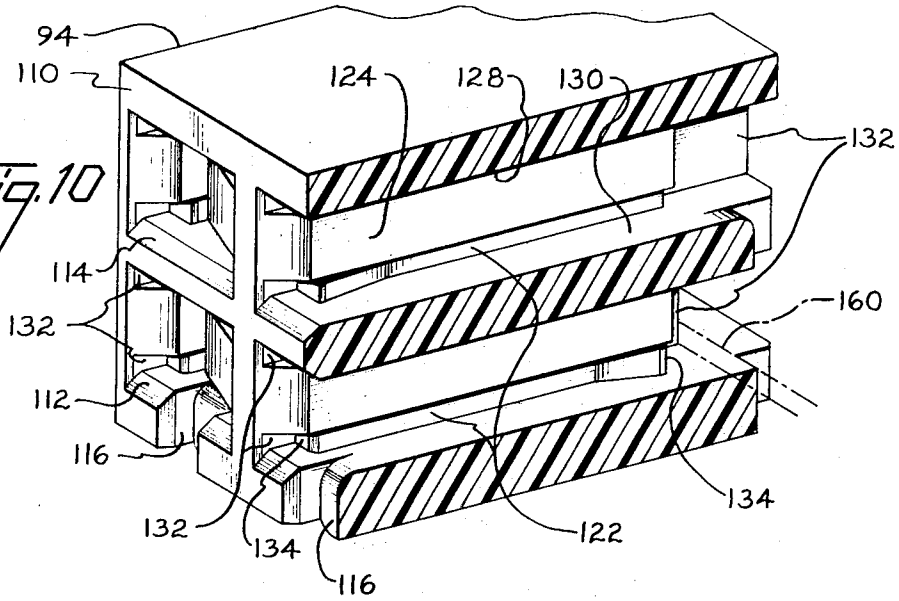

Fig. 10

INVENTOR.
Richard W. Black &
BY Robert F. Evans

THOMAS Hooker,
Their Attorney

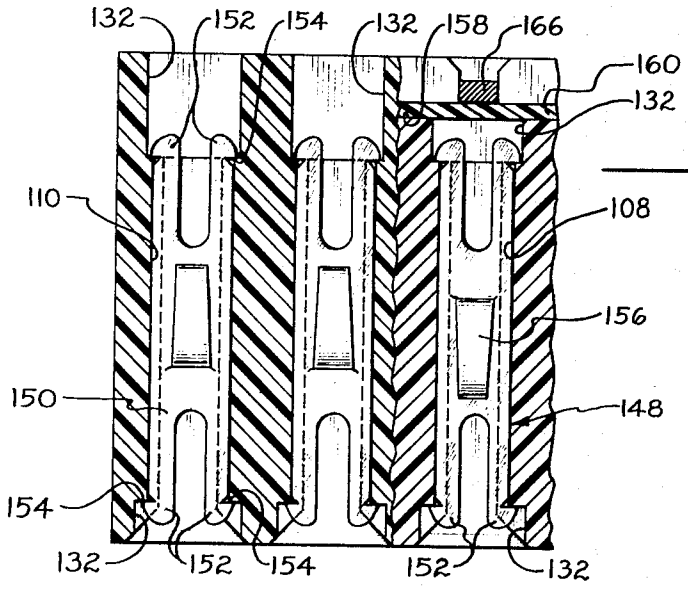

Fig. 11

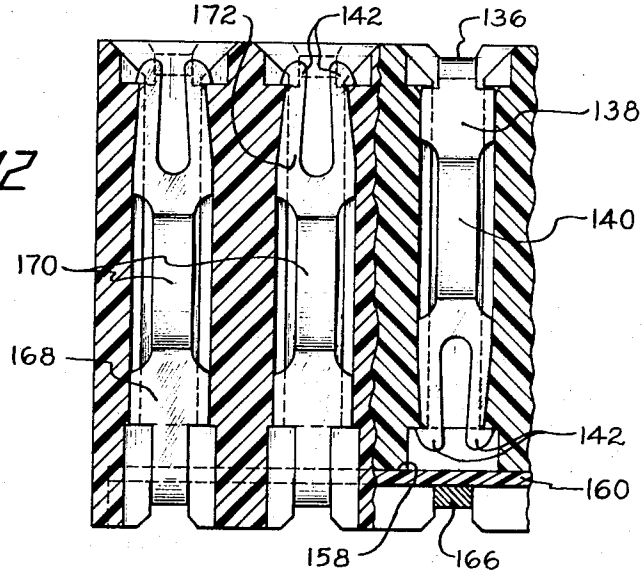

Fig. 12

INVENTOR.
Richard W. Black &
BY Robert F. Evans
THOMAS Hooker,
Their Attorney

CONNECTOR BLOCK

The invention relates to a connector block having female disconnect terminals confined in two rows of cavities formed in the block for establishing electrical connections with contact pins which are inserted into the cavities. One row of cavities is above the other row of cavities. The block is mounted on a circuit board or like support with the rows of cavities parallel to the top circuit board surface. Contact or tail portions of the terminals in the row of cavities adjacent the circuit board extend from the block and into the board at the end of the cavities through which the pins are inserted. The contact portions or tails of the terminals in the second row of cavities located further away from the circuit board than the first row of cavities, extend from the ends of the cavities away from the ends through which the pins are inserted past the first row of cavities and into the circuit board. An insulating strip is provided between the contact portions of the terminals in the second row of cavities and the terminals in the first row of cavities to prevent short circuit electrical connections from being formed between the terminals in the different rows by pins inserted into the first cavities.

In one embodiment of the invention preformed disconnect terminals are confined within the cavities. A locking pin is used to hold the preformed terminals in the row of cavities in the connector block. In another embodiment disconnect contact portions are confined within the cavities together with separate springs which are used to bias male contacts inserted within the cavities against the disconnect contact portions. The use of integral preformed terminals has certain advantages where the mating male pins are relatively small in cross section and the use of the two part spring and contact is advantageous where the male contacts are relatively large in cross section. In either embodiment of the invention, the bottom surface of the connector block may be provided with rounded ridges to space the same from the circuit board and permit cleaning of flux from the circuit board subsequent to soldering.

Other objects and features of the invention will become apparent as the description proceeds, especially when taken in conjunction with the accompanying drawings illustrating the invention, of which there are five sheets.

IN THE DRAWINGS

FIG. 1 is a perspective view of a connector block and a pin board which is inserted into the block;

FIG. 2 is a sectional view taken through the connector block with the pin board inserted into the block;

FIG. 3 is a top view of FIG. 2;

FIGS. 4 and 5 are front and rear views respectively of the connector block;

FIGS. 6 and 7 are front and rear views respectively of a modification of the connector block;

FIG. 8 is a sectional view taken through the connector block of FIGS. 6 and 7;

FIG. 9 is a sectional view taken along line 9—9 of FIG. 6;

FIG. 10 is a perspective view of the insulating block of the embodiment of FIG. 6 and 7; and

FIGS. 11 and 12 are sectional views taken along lines 11—11 and 12—12 of FIG. 7.

A connector block 10 includes an elongate molded plastic insulating housing 12 having a rectangular cross section and top face 14, bottom face 16 and front face 18 and back face 20. A first row 22 of terminal receiving cavities 24 extends along the bottom of body 12 adjacent face 16. The cavities 24 run between the front and back faces 18 and 20. Each cavity includes a terminal stop 26 adjacent face 18 for limiting insertion of the terminal in the cavity. The cavity mouth 28 adjacent stop 26 is bevelled to provide a leadin for a male contact pin which is inserted into the cavity. A female disconnect terminal 30, which may be of the type disclosed in U.S. Pat. No. 3,370,265, is inserted into each cavity 24 from the opening at rear face 20 so that the terminal abuts stop 26 and terminal contact tang 32 extends past the stop and outwardly of body 12. The tang 32 is then bent down through an angle of approximately 90° so that it is confined in a groove 34 formed in the bottom of the cavity 24 adjacent front face 18. Tang 32 extends outwardly past bottom surface 16. With the tang 32 bent down as described, the terminal 30 is confined within cavity 24.

The body 12 is provided with a second row 36 of terminal cavities 38 located above row 22 and adjacent to top surface 14. Each cavity 38 is located immediately above a cavity 24 and is provided with a terminal stop 40 similar to stop 26. Stop 40 is bevelled adjacent the lead receiving end of cavity 38 to provide a contact pin leadin 42. A disconnect terminal 44, which again may be of the type disclosed in U.S. Pat. No. 3,370,265, is inserted into each cavity 38 through opening 46 thereof in wall 20 until the lead end of the terminal abuts stop 40. Terminals 44 are provided with contact tails 48 which project from the end of the terminal adjacent opening 46. After the terminals have been inserted, the tails 48 are bent down through an angle of 90° so that they are positioned in grooves 50 formed in back face 20. Each groove 50 extends from a terminal recess 38 to the top of recess 24 located beneath the recess 38. An extension 52 of groove 50 extends from the bottom of each recess 24 to bottom wall 16.

Pin bore 54 extends the length of body 12 and intersects the top of each terminal cavity 38 adjacent end 46 thereof. Windows 56 communicate the bore with the body top 14 between adjacent terminal cavities 38 and extend longitudinally into the cavities to a slight extent. Thus, the entire longitudinal extent of the bore 54 communicates with either the top 14 of body 12 through windows 56 or with the interior of cavities 38. Body 14 is preferably formed of a plastic by a molding operation. Bore 54 is formed by mold parts which extend through windows and into the bore during molding.

After the terminals 44 have been inserted into the cavities 38, plastic locking pin 58 is inserted through bore 54 behind the edge of the terminals adjacent cavity end 46 so as to lock the terminals within the cavities 38. Locking pin 58 may be provided with a head 60 which rests flush on one end of the block when the pin is fully inserted. The pin 58 is visible from the top of the block through windows 56 when inserted.

An elongate flat insulating bar 62 is positioned in a groove 64 formed in back face 20 along the openings of recesses 24. The insulating strip 62 is held in place in groove 64 by the tangs 48 of terminals 44 which are located outwardly of the strip. Strip 62 is provided to insulate tangs 48 from pins which may be overinserted into cavities 24 to establish electrical connections with

terminals 30. The strip prevent the leads from contacting tangs 48 and thus prevents short circuit connections with terminals 44.

Block 10 may be mounted on circuit board 66 with tangs 32 and 48 extending through holes in the board so that they may be solder connected to contact pads 68 and 70 on the bottom of the board. The bottom surface 16 of the block is spaced from the board by crosswise extending curved ridges 72 to facilitate removal of flux from between the board and the block after soldering.

Block 10 is used for forming disconnect electrical connections between circuitry on board 66 and two rows of contact pins 74 carried on board 76. The electrical connections are formed by inserting lead ends of pins 74 within the open ends 78 and 80 of cavities 24 and 38 and then pushing the board 76 toward the block 10 so that the pins 74 are guided along leadins 28 and 42 into electrical connection with terminals 30 and 44.

Connector block 10 is particularly adapted for mounting on a circuit board to receive miniature contact pins 74. In contrast thereto, similar connector block 90 illustrated in FIGS. 6 thru 10, is adapted to mate with larger wire wrap contact pins 92 each being conventionally square with a cross section of 0.025 inches on a side.

The block 90 includes a molded plastic body 94 similar to body 12 having a top face 96, a bottom face 98 and front and rear faces 100 and 102. Two rows 104 and 106 of terminal cavities 108 and 110 extend longitudinally along body 94 with each cavity 108 and 110 communicating the front and rear body faces 100 and 102. The openings of the cavities 108 and 110 in front face 100 are provided with bevelled leadins 112 and 114. As in body 12, a groove 116 extends from the end of the lower cavities 108 adjacent front face 100 to bottom face 98 and a groove 118 extends from the opening of each upper cavity 110 with rear face 102 along the face to the junction with the cavity 108 located beneath the cavity 110. A continuation 120 of groove 118 extends from each cavity 108 to the bottom face 98.

Grooves 122 are formed in the side walls 124, 126 of each cavity 108 and 110 adjacent the top and bottom cavity walls 128 and 130. Locking recesses 132 are located at each end of each groove 122 and are joined to the grooves by locking shoulders 134.

An electrical contact 136 comprises a flat contact body 138 with an upwardly bowed contact ridge 140 formed in the median portion thereof and a pair of flexible latch fingers 142 formed on the free end thereof. Each finger 142 includes a latch surface 144 which faces away from the free end of the terminal. A square wire wrap tail 146 extends away from the other end of the contact body at an angle of 90° therefrom. The contacts 136 are mounted in the bottom of cavities 108 by inserting bodies 136 into the cavities through the openings at faces 100 with the edges of the bodies confined within the bottom grooves 122. During insertion the latch fingers 142 are bent inwardly toward each other until the contact is fully inserted at which time the latch surface 144 snaps back past the shoulders 134 and into recesses 132 to confine the contacts within the cavities 108. When fully inserted the portion of the contact joining the body and tail 146 is seated within groove 116 and the tail projects perpendicularly away from bottom surface 98.

Spring member 148 is provided with flat body portion 150 having a pair of latch fingers 152 at each end. Each finger has a latch surface 154 at the free end thereof. The fingers and latch surfaces 152 and 154 may be identical to the fingers and surfaces 142 and 144 of contact 136. A curved cantilever spring 156 is formed from the central portion of body 150 and projects to one side of the body. The spring member 148 is inserted into cavity 108 through either end thereof by positioning it within grooves 122 at the top of the cavity and then inserting it so that the fingers 152 at the lead end are flexed inwardly and when fully inserted snap back into recess 132 behind latch surface 134. When fully inserted the latch surface 154 at each end of the spring are locked behind latch surfaces 134 at each end of the cavity to confine the spring therein. The spring is inserted into the cavity so that the free end of the cantilever spring 156 extends away from front surface 100. A groove 158 extends along the lower face 102 of block 94 at the mouths of cavities 108, and elongate insulating strip 160 is confined within groove 158.

The upper cavities 110 are each provided with a spring 162 in the top of the cavity identical to the spring 148 in cavities 108. A contact 164 includes a wire wrap tail 166 and a flat body portion 168 having a contact ridge 170 formed in the median portion thereof and a pair of resilient latching fingers 172 formed at the free end of the body. The contacts 164 are inserted into cavities 110 through the cavity opening at the rear face 102 by positioning the contact fingers 172 in the grooves 122 at the bottom of the cavity and then moving the contacts 164 into the cavity so that when fully inserted the latch surface 174 on fingers 172 have snapped back behind the latch surfaces 134 at the ends of grooves 122 adjacent the front face 100 to confine the contacts within the cavities. When fully inserted the portion of the contacts 164 joining body 168 and the wire wrap tails 166 are seated in grooves 118 and the tails 166 are seated in the grooves 120 so that the insulating strip 160 is confined within the groove 158 and the contacts 164 are insulated from the interior of cavities 108.

As indicated in the drawings, the cantilever springs 156 in each cavity 108, 110 are located immediately opposite the contact ridges 140, 170 so that when the rows of wire wrap pins 92 are inserted into the cavities, the springs are deflected to hold the contact pins 92 in electrical engagement with the contact ridges. As indicated the block 90 may be mounted on a circuit board 178 and solder connections may be formed between the wire wrap pins 146 and 168 and printed circuitry 170, 172 on the board. Wire wrap connections or disconnect terminals may be used to form electrical connections with the free ends of tails 146 and 166 as desired.

In connector block 90 it is desirable to form the contacts and springs from separate pieces of metal. In this way the manufacturing processes required for each member can be more accurately controlled and both members need not be subjected to a manufacturing process required for a single member. For instance, it is desirable to heat treat the springs thereby assuring that the cantilever springs provide a high pressure contact between the inserted pin and the contact ridge. Heat treating of contacts would increase the brittleness thereof and render it difficult to perform any sub-

sequent forming operations on the contacts. By utilizing independent springs and contacts, it is possible to alter the geometry and performance characteristics of a spring or contact without changing the other and thus reducing the cost of modifying the block to accommodate different types of male contacts and to meet different requirements.

Connector block **90** may be provided with spacing ridges in the bottom faces **98** thereof in order to space the block from a circuit board to facilitate flux removal. In either of the blocks **10** or **90** the contact portions which extend below the connector block for establishing electrical connection with circuit elements may be solder tangs as disclosed in block **10**, wire wrap tails as disclosed in block **90** or other forms of contacts depending upon the requirement for the block.

While we have illustrated and described preferred embodiments of our invention, it is understood that these are capable of modification, and we therefore do not wish to be limited to the precise details set forth, but desire to avail ourselves of such changes and alterations as fall within the purview of the following claims.

What we claim as our invention is:

1. A connector block comprising an elongate insulating body having a top surface, a bottom surface and front and back surfaces, a first row of terminal cavities communicating said front and back surfaces adjacent said bottom surface, a second row of terminal cavities communicating said front and back surfaces adjacent said top surface with each cavity of said second row being located immediately above a cavity of said first row, first disconnect terminal means confined in each of said cavities in said first row including a contact tail extending from the end of a cavity adjacent said front surface toward and past said bottom surface, second disconnect terminal means confined in each cavity of said second row of cavities including a contact tail extending from the end of a cavity adjacent said back surface past said first row of cavities and beyond said bottom surface whereby each terminal means may be secured to a circuit element adjacent said bottom surface, and insulating means separating said terminal means in said first row of cavities from said tails of said terminal means in said second row of cavities.

2. A connector block as in claim **1** including a groove extending along said back face intersecting each cavity of said first row of cavities, said insulating means comprising an insulating strip confined between the bottom of said groove and the contact tails of said second terminal means.

3. A connector block as in claim **1** including a bore extending longitudinally along said block and intersecting said second row of cavities and a locking pin insertable within said second row of cavities to confine said second terminal means within such cavities.

4. A connector block as in claim **3** wherein the entire longitudinal length of said bore is exposed to either the cavities of said second row of cavities or a surface of the body.

5. A connector block as in claim **1** including rounded ribs formed on the bottom surface for spacing said connector block from a circuit board.

6. A connector block comprising an insulating housing, a first row of cavities in said housing communicating front and back surfaces thereof, a second row of cavities in said housing communicating said surfaces and located above said first row of cavities, first circuit elements confined within the cavities of said first row of cavities and second circuit elements confined within the cavities of said second row of cavities, first contact means adjacent said front surface extending from said first circuit elements outwardly of the housing for establishing electrical connections with circuit members, second contact means extending along said back surface past said first circuit elements and outwardly of the housing for establishing electrical connections with circuit members, and an elongate insulating strip extending along said back surface and separating said first circuit elements from said second contact means.

7. A connector block comprising an insulating housing, a first row of cavities within said housing communicating with opposite exterior surfaces thereof, a second row of cavities in said housing communicating said surfaces and spaced from said first row of cavities, first circuit elements confined within the cavities of said first row of cavities and second circuit elements confined within the cavities of said second row of cavities, first contact means extending from said first circuit elements outwardly of the housing for establishing electrical connections with circuit members, second contact means extending from said second circuit elements along one of said surfaces past said first row of circuit elements and outwardly of the housing for establishing electrical connections with circuit members, and en elongate insulating strip extending along said one surface and separating said first circuit elements from said second circuit means.

* * * * *