United States Patent

Reid et al.

[15] **3,693,314**

[45] **Sept. 26, 1972**

[54] **CLOSING SYSTEM FOR BAGS AND THE LIKE**

[72] Inventors: **Philip L. Reid**, Lyman; **Edward L. Holcombe**, Taylors, both of S.C.

[73] Assignee: **W. R, Grace & Co.**, Duncan, S.C.

[22] Filed: **Dec. 14, 1970**

[21] Appl. No.: **97,747**

[52] **U.S. Cl.** .....**53/22 B**, 53/86, 53/112 B, 53/138

[51] **Int. Cl.** **B65b 31/02**

[58] **Field of Search** .....53/22 B, 112 B, 86, 89–95, 53/138; 141/8

[56] **References Cited**

UNITED STATES PATENTS

2,924,924 2/1960 Garapolo et al.....53/112 B

3,516,222 6/1970 Klenz .....53/112 B X

Primary Examiner—Travis S. McGehee

Attorney—John J. Toney, William D. Lee, Jr. and Edward J. Hanson, Jr.

[57] **ABSTRACT**

Disclosed is an apparatus and method for closing containers and especially useful for closing bags containing vacuum packaged products. The following features are included: means for straddling the bag's neck, means for positioning the bag's neck, means for pressure closing a clip, means for sensing that the pressure applied to close the clip is sufficient and associated apparatus for vacuumizing the bag.

8 Claims, 9 Drawing Figures

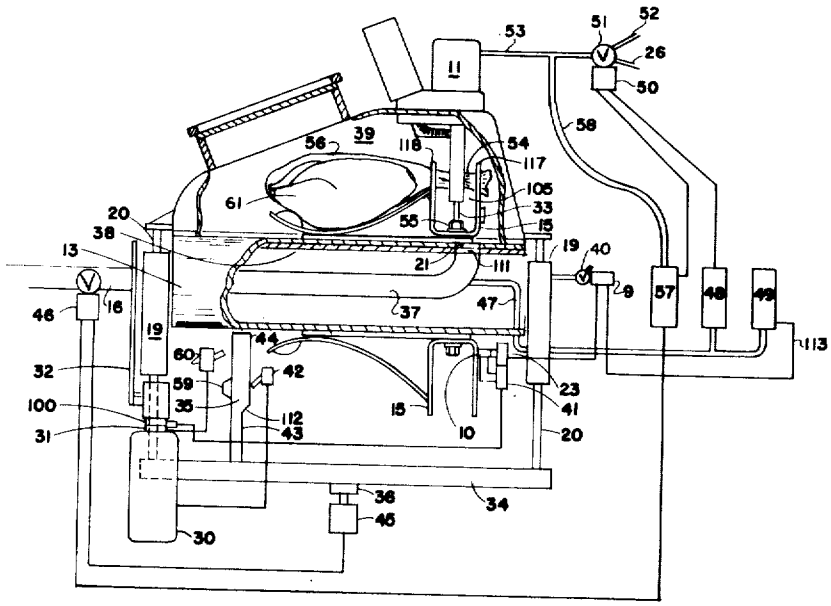

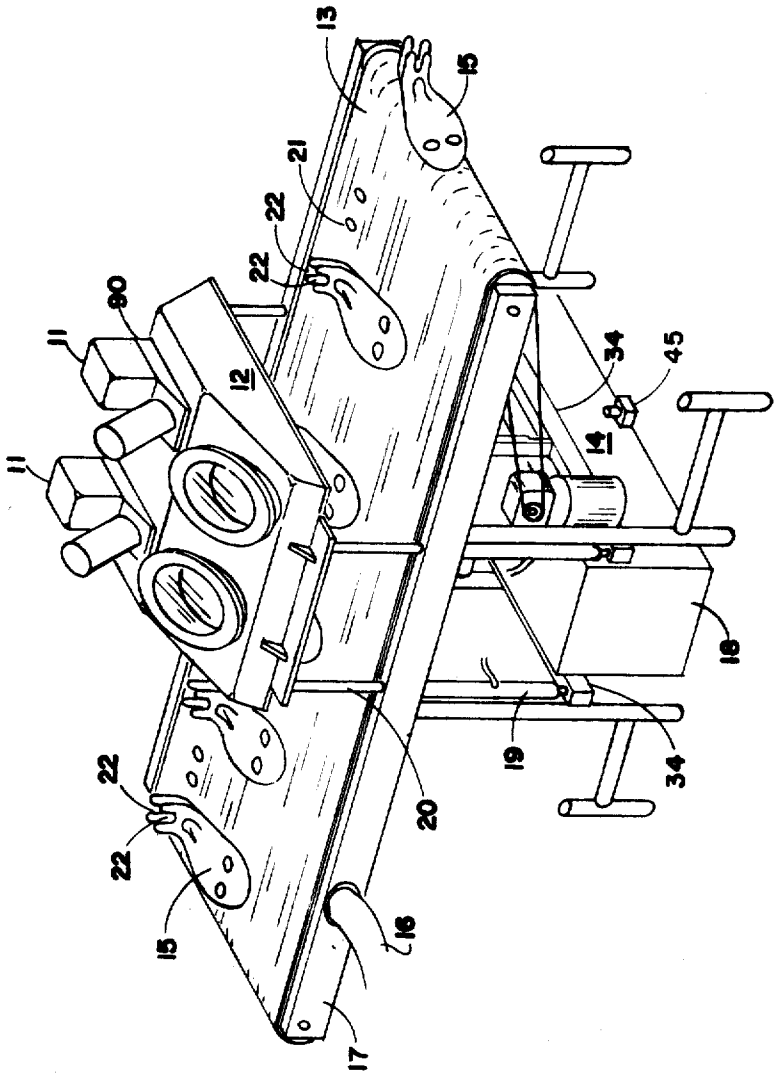

FIG. 1

INVENTORS
PHILIP L. REID
E. L. HOLCOMBE
BY Edward J. Hanson Jr
ATTORNEY

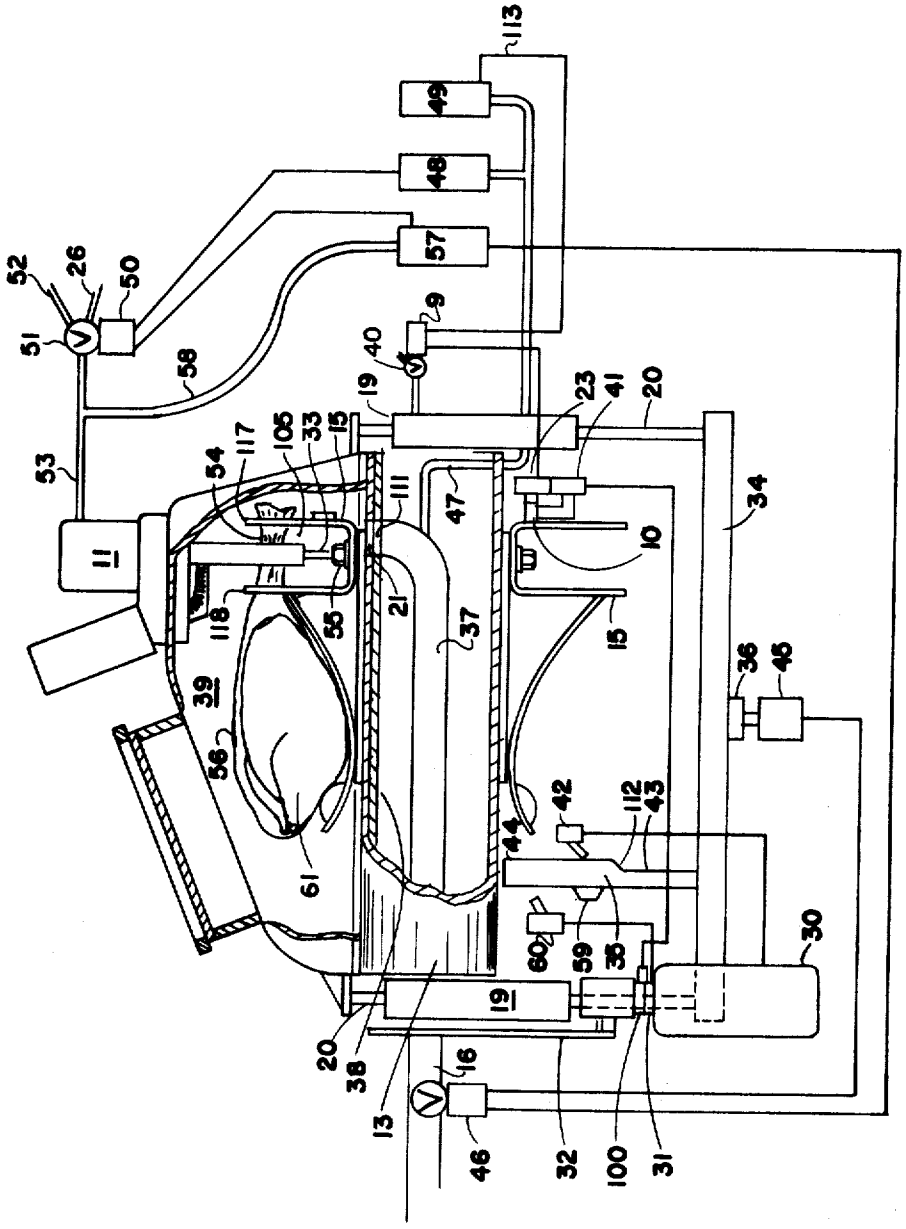
113
49
48
57
52
26
50
51
9
40
58
19
23
41
20
53
105
33
15
117
54
111
47
34
11
10
118
55
21
37
15
39
36
45
56
42
112
43
44
61
35
59
60
30
19
20
38
16
13
46
32
100
31

FIG. 2

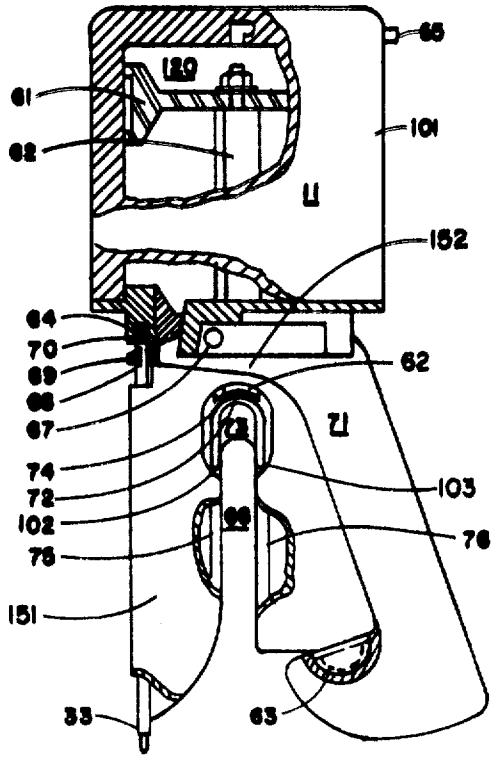

FIG. 3

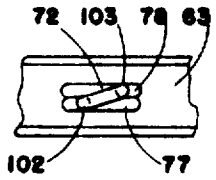

FIG. 4

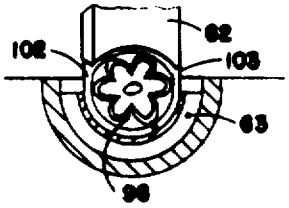

FIG. 5

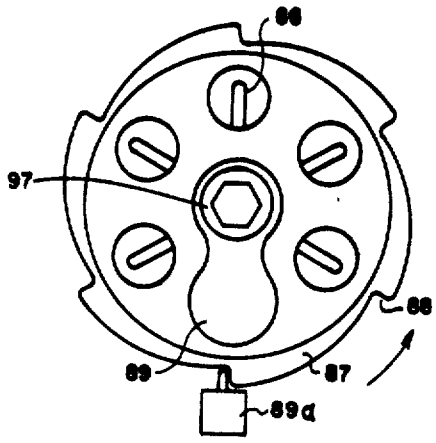
86
97
88
89
87
89a

FIG. 6

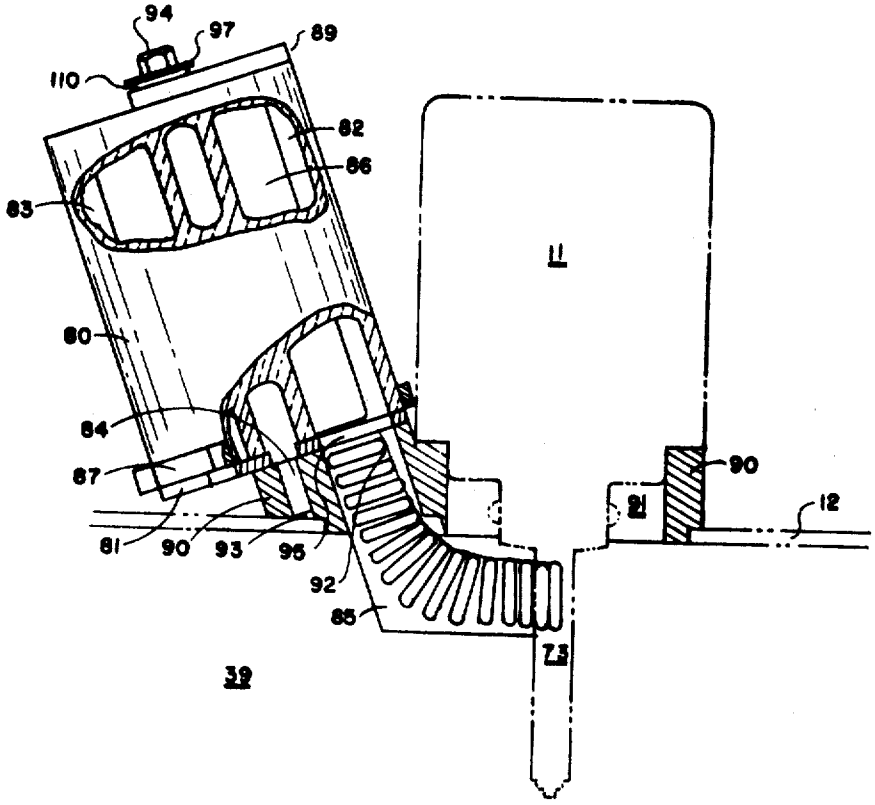
94
97
89
110
82
86
83
11
80
84
87
90
21
12
81
90
93
95
92
85
73
39

FIG. 7

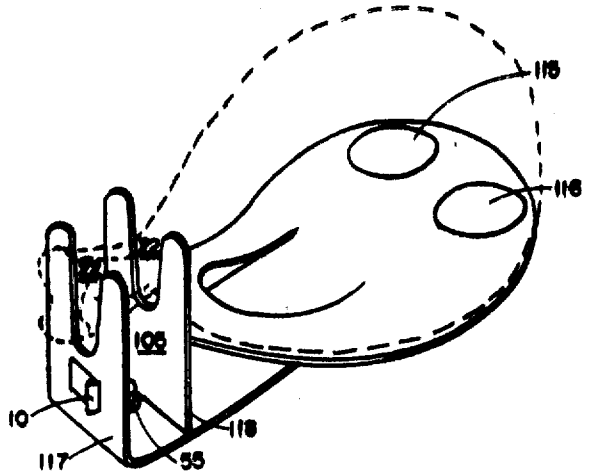

FIG. 8

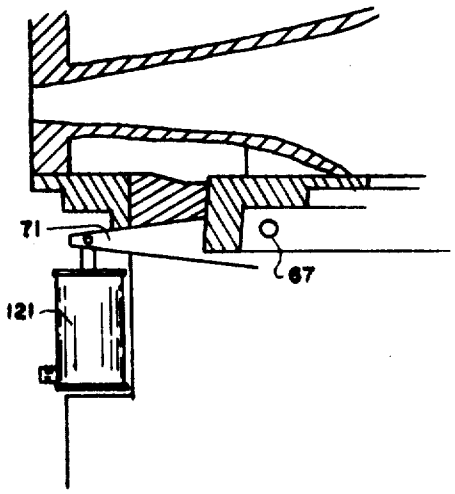

FIG. 9

CLOSING SYSTEM FOR BAGS AND THE LIKE

BACKGROUND OF THE INVENTION

The present invention relates to a method and means for closing containers and is particularly applicable to closing bags subsequent to vacuumizing.

A primary object of the present invention is to provide a system for closing bags.

An additional object of the present invention is to provide a bag closing system for closing vacuumized bags.

A further object of the present invention is to provide a closing system in which the closing is accomplished in part by the application of pressure and the satisfactory attainment of the pressure quality to assure normal satisfactory closing is sensed to release the area sealed from the sealing means.

Another object of the present invention is to provide a highly efficient closing system which lends itself to economical manufacture.

SUMMARY OF THE INVENTION

These and other objects of the present invention are desirably satisfied by an apparatus which includes:

1. A clipper having a throat for the straddling of a bag neck,
2. A gate means for closing the clipper's throat and enclosing a bag straddled thereby,
3. A pressure means providing a clip in straddling position on the bag neck and closing the clip thereabout,
4. A pressure sensing means sensing when the pressure provided for closing the clip has reached a satisfactory clip closing quality, and
5. A closed clip freeing means responsive to the sensing means.

By an aspect of our invention in one preferred application thereof bags containing products such as meat cuts or fowl are closed after they have been vacuumized. The bagged products are initially placed on the conveyor which transports them to a vacuumizing zone. The clipper is incorporated into a hood member which is brought into contact with the conveyor to form a vacuum chamber around the product. The closing of the hood member brings the throat of the clipper into straddling position respecting the neck of the bag. As the hood and the clipper reach the bottom of their travel, a portion of the clipper is engaged with the conveying means causing the clipper gate means to close.

Air is then withdrawn from the vacuum chamber to form a vacuum therein which will in turn vacuumize the bagged product. After a certain level of pressure reduction has been reached in the vacuum chamber, a sensing means causes the clipper to close a clip about the bag's neck to seal the bag and thereby preserve the vacuum level therein. Subsequent to sealing, the closed clip is released by the clipper in response to a sensing that proper pressure was applied to close the clip. The air pressure within the vacuum chamber is returned to normal atmospheric and the hood is removed from the vicinity of the conveyor, removing the engaging portion of the clipper from engagement with the conveyor and thereby opening the gate means. The conveyor which was stopped during the closing and opening of the hood now transports the vacuumized and closed bag away from the vacuumizing zone while at the same time transporting an unprocessed bag into the vacuumizing zone for the next vacuumizing cycle.

In this preferred embodiment, the sequencing of events is largely and advantageously determined by the condition of the events themselves. First, the position of the product with respect to the vacuumizing zone indirectly signals the belt to stop and the hood to be lowered. Then the hood being positioned with the belt to form a vacuum chamber causes vacuumizing to begin. When a satisfactory chamber vacuum is obtained, relay means cause the bag closure device to operate. Subsequently, the obtaining of proper air pressure in the air-operated, bag closing means signals both the disengagement of the clipper closure means the the cessation of chamber vacuumization. When the chamber returns to normal atmospheric pressure, the hood member is made to rise. Finally, the upward motion of the hood triggers control means to start the conveyor and begin a new vacuumizing cycle.

This method of sequencing insures that the desired results of each event take place before the succeeding event occurs. It allows for variables, e.g., for instance in vacuum level and air pressure, and is thought to be superior to prior art control means which rely on timers and like means.

Additional aspects and further features of the present invention are included in the following Brief Description of the Drawings and Discussion of the Preferred Embodiments.

BRIEF DESCRIPTION OF THE DRAWINGS

FIG. **1** is an isometric view of the vacuumizing and closing apparatus.

FIG. **2** is a partial cut away elevation view and a schematic representation of the major elements of the vacuumizing and closing apparatus with the cylinders **19** and rods **20** foreshortened.

FIG. **3** is a partial cut away elevation view of the clipper closing means.

FIG. **4** shows in plan view a closure clip engaged with the anvil member of the clipping device shown in FIG. **3**.

FIG. **5** is an elevation view of the closure clip of FIG. **4**.

FIG. **6** is a plan view of a cylindrical clip feed member.

FIG. **7** is a partial elevation view of a cylindrical clip feed member.

FIG. **8** is an isometric view of a product locator.

FIG. **9** is a partial cut away view of an air operated gate assembly.

DISCUSSION OF THE PREFERRED EMBODIMENTS

General Discussion of the Preferred and Alternative Embodiments

In FIG. **1** we have shown a perspective view of one embodiment of the vacuumizing and closing apparatus. The major components of the apparatus include the bag closing clipper assemblies **11**, the hood member **12**, the conveyor belt **13**, the conveyor belt drive assembly **14**, the product locators **15**, the connecting means **16** leading to an appropriate vacuum source (not shown), the apparatus support and frame assembly **17**, control box **18**, pneumatic cylinders **19**, and hood supporting piston rods **20**.

In operation these components relate to one another and function in he following manner.

Still referring to FIG. 1, bagged products are placed on the locating members **15** which are at the upstream side of the machine, or in this figure, at the far end of the machine. The bags are situated so that their open ends lie in the U-shaped slots **22** of the locators **15**. The slots **22** provide means that provide a somewhat gathered condition to the bag's neck region at two adjacent spaced apart areas. The bagged products are transported by conveyor **13** (to which locators **15** are attached by bolts or other means), to the vacuumizing and sealing zone comprising in this case the projection of hood **12** onto conveyor belt **13**.

The conveyor is an endless belt of rubber or other like material and it transports the products into and out of the vacuumizing and sealing zone. The belt extends approximately the length of the apparatus and is powered by conventional means. The hood is mounted above the conveyor on pneumatic cylinders so that in its up position it is located out of the path of conveyed products and so that in its down position it contacts the conveyor to enclose the products located thereon and to form a vacuum chamber therewith. In this preferred embodiment, chamber vacuum is obtained through opening means in the conveyor belt. The conveyor's stop position is timed so that these vacuum opening means in the conveyor are adjacent a vacuum manifold positioned thereunder and connected with a conventional vacuum pump. The bag locating means are included as a part of the conveyor belt. These locating means position the bag with respect to the belt so that when the belt is stopped, the bag will lie properly to be engaged by the bag closing means. The bag closing means, which is included in the hood member and engages the bag's neck opening during the downward travel of the hood assembly, closes the bag after it has been vacuumized.

When two bagged products and their locators are positioned beneath the hood **12**, the conveyor stops. At this time, air cylinders **19**, through their associated hood support piston rods **20**, lower the hood **12** until it contacts the conveyor and encloses the bagged products in the chamber thus formed. The open throat means **66** is moved to receive the bag's neck region **54** by the lowering of hood **12** by which it is carried. The gate means **71** closes the throat means **66** in response to the caming action of the actuating rod **33** when it is brought in to pressing engagement with the belt **13** by the lowering of the hood **12**.

After the chamber configuration is obtained and the throat or bag neck enclosing space **66** of the clipper **11** has closed about the bag's neck **54**, air from within the chamber is evacuated through conveyor openings **21**, vacuum manifold **37** (FIG. 2) and vacuum connector line **16**. When a sufficient vacuum level is reached in the chamber, clipper **11** crimps a clip around the open bag neck to seal off and preserve the vacuum level inside the bag. The bag's neck is then severed adjacent the clip by the severing means **150**. When the bag has been sealed, air cylinders **19** raise the hood **12**, and the conveyor is started again. The vacuumized and closed bag is carried out of the vacuum sealing zone where it may be removed from the locator and be borne away for further processing.

Certain variations may be made in the components of the vacuumizing and closing apparatus as described and shown and still fall within the generally preferred embodiment of the present invention. For instance, it is not necessary to employ a single vacuumizing zone. Longer conveyors may be provided with two or a plurality of vacuumizing and sealing zones. Nor is it necessary that two bagged products be vacuumized during each vacuumizing and sealing cycle as shall be illustrated in this application. One or any additional number of products within practical limits may be located in the vacuum chamber and be vacuumized and closed with each cycle. Furthermore, although preferred, it is not necessary in some instances to employ mechanical bag closing devices of the type shown and to be more fully described in the following. For instance, the bag's open end may have malleable metal injected about the bag's neck or the bag's neck could be heat sealed.

Additional variations in alternative examples may be made in the manner of vacuumizing and in the configuration of the product locators. Although it has been found particularly advantageous to employ the vacuumizing method shown, it is also possible to apply a vacuum to the chamber through the hood assembly, rather than through the conveyor belt.

The configuration of the product locators may be varied to suit the requirements of the particular object to be vacuum packaged. The locators **15**, shown in FIGS. **1**, **2** and **8**, are useful for bagged fowl, particularly turkeys. Other types of locators may be advantageously employed for other types of products. Certain products require no locators other than positioning marks on the conveyor belt.

In certain instances it may be desirable to vary the manner of actuating the hood member **12**. Although raising and lowering in a vertical manner by pneumatic cylinders is preferred, the hood may also be raised and lowered by mechanical linkages, lever arms or the like. It is also possible to bring the hood into contact with the conveyor by mounting the hood on pivotable supports so that it engages the conveyor by a swinging action.

Having described now the more general aspects of the present invention, the discussion is directed to operable details of the preferred apparatus as shown and described. This detailed discussion includes description of the components necessary for sequencing the various events in vacuumizing and sealing packages, description of the mechanical clipping device, and description of a clip feed mechanism.

Clipping Device

Referring now to FIG. **3** we have shown the clipper assembly **11** in partial cut away view. The major components of the clipper assembly include piston housing **101**, piston member **61**, piston chamber **120**, a frame portion **151**, an elongated throat **66** passing into the frame portion **151**, piston rod and clip drive, punch means **62** which is the clip applying means for moving the clip through throat **66** and about the bag's neck region **54**, clip crimping anvil means **63**, and an outwardly biased reciprocal member or clipper actuating rod **33** on one side of the throat **66** and a pivotal gate member **71** on the opposite side of throat **66** with an arm **152** connecting the pivotal member **71** to the

reciprocal member **33**. The arm **152** is formed integral with pivotal member **71**. The reciprocal member **33** is biased outwardly by spring **70**. The arm **152** is engaged in notch or driving rod notch portion **68** for moving the member **71** pivotally about pivot point means or pin **67** The gate is pivoted across the throat **66** when the reciprocal member **33** is pressed against its bias and away from the throat when the member **33** is allowed to return to its bias. The engagement of the reciprocal member with the surface of conveyor **13** moves the member **33** against its bias and the removal of the member from the surface allows its return to bias. A clip delivery track is formed in the throat **66** on its facing linear walls as grooves **75** and **76**. The punch **62** is provided at the upper end of the throat for moving the clips through the delivery track. A clip crimping anvil means **63** is mounted on the gate member **71** for positioning below the punch when the gate closes the throat **66**. The piston **61** is attached to the end of punch **62** opposite the throat **66**. The air cylinder or piston chamber **120** mounts the piston for moving the punch through the throat **66**. Other components include air entry port **65** and the gripping jaw swing arm connector **69** which is a portion of arm **152**. Spring **70** is mounted in recess **64**. In operation these elements cooperate to enclose a bag's neck and thereafter crimp closed a clip around a bag's open neck.

The entire clipping apparatus is adapted to vacuumize and close bags and the like containing products. The clipper **11** and its directly supported apparatus is carried downwardly with the hood member, to which it is attached by an adaptor means **90** (FIG. **7**). In this manner the clipper is mounted adjacent to the surface of the conveyor **13**. As the clipper proceeds downwardly, it engages or straddles the bag neck in the throat space **66** as previously mentioned. The throat space **66** is sufficiently large in dimension to facilitate proper air evacuation from the bag through the bag neck after closure. The throat is dimensioned to maintain the neck region of the bag captive and at the same time allow sufficient openness of the neck region to permit evacuation of gas therefrom prior to the closing of bag with a clip. The throat means is also sufficiently restrictive to cause the inflation of the bag due to internal gas if the exterior of the bag is subjected to reduced gas pressure.

The bag neck is held in position to be so engaged by the U-shaped slots **22** located in the two vertical end pieces of the product locator **15** as seen in FIG. **8**. Two crown members **115** and **116** at the rear of the locator also aid in positioning the product. The clipper straddles the bag neck in the area **105** between the two vertical end pieces **117** and **118** as further depicted in FIG. **2**.

Preferably subsequent to gate closing, high pressure air is introduced into the port **65** by the valve means **51** forcing the piston **61** and associated piston rod and clip drive **62** downwardly. These parts functioning under the air pressure provide a clip closing means. The clip engaging end **74** of clip drive rod **62** carries an individual clip **72** from space **73** downwardly along the track formed by the grooves **75** and **76** and around the bag neck located in space **66**. Grooves **75** and **76** are located within the body of the frame surrounding space **66** so that the legs **102** and **103** of the clip will not slip out of the carrying track and so that they will not pinch and become entangled with the bag neck material.

Clip drive **62** forces the clip and the bag neck to proceed downwardly through space **66** into subsequent engagement with the anvil member **63** which defines in its closed position the bottom portion of space **66**. The respective ends or legs **102** and **103** of the clip are engaged into the crimping slots or grooves of the anvil member as seen in FIGS. **3**, **4** and **5**. As the punch proceeds downwardly, the clip ends are cammed toward one another and bent into a tight loop about the bag neck **98** (FIG. **5**). Since each clip leg engages separate anvil grooves it is necessary that the clip be angled with respect to the grooves. The punch drive **62** and guide slots **75** and **76** may be angled to the anvil as in the example shown in FIGS. **3**, **4** and **5**, or the anvil grooves themselves may be angled with the punch and guide slots remaining straight.

During the clip engaging and crimping period, high pressure air is applied through port **60** against the upper surface of piston **61**. When a predetermined pressure level has been reached and adequate clip crimping achieved, pressure sensitive switch **57** seen in FIG. **2**, actuates valve **51** so that the application of high pressure air to port **65** is terminated and a vacuum is applied instead through port **65**. Pressure sensitive switch **57** is the means that senses when the pressure provided has reached a satisfactory clip closing quantity and quality. The pressure sensitive switch **57** is connected to air chamber **120** for sensing when the pressure therein indicates a satisfactory clip closure.

The vacuum lifts piston **61** into the region of lower pressure air and hence disengages it from contact with the now closed clip. Thus the means supplying the vacuum are the closed clip freeing means for freeing the pressure closed clip for subsequent removal from the clipper. The closed clip freeing means is responsively connected to the means sensing when the pressure provided has reached a satisfactory clip closing quantity. The clip freeing means is responsive to the sensing means to free the closed clip. Thus a superior device is provided for closing the neck regions of bags, the device including means for sealing the neck region and means sensing the conditions for a satisfactory seal. The means for sealing the neck region include means for providing a sealant member about the neck region.

Drive member **62** is raised sufficiently high by the vacuum so that the next clip from the clip supply will drop in the space **63** and thereby be available for the next vacuumizing and closing cycle. The bag neck is freed from space **66** when the hood and hence the clipper is raised. Actuator **33** is also removed from contact with engaging means **55** (see in FIG. **2**), and is forced downwardly by spring **70**, moving the jaw **71** and associated anvil **63** away from the bag's neck. When an air cylinder gate actuator is employed, the cylinder is caused to open the gate after clipping takes place.

There is also another method of actuating gate or jaw member **71**. In this method (as seen in FIG. **9**), the actuating rod **33** is replaced by an air cylinder **121**. The air cylinder is connected to the gate **71** so that when the cylinder is activated, it rotates the gate about pivot means **67**. The air cylinder is preferably activated prior to high pressure air being introduced into port **65** (FIG.

3), for example, by a limit switch engaged as the hood contacts the conveyor **13**. It should also be noted that in certain cases other means may be employed to actuate a gate in enclosing space **66**.

Clip Feed and Supply Apparatus

Referring now to FIG. **6** and **7**, I have shown the clip feed and supply apparatus. The apparatus comprises basically a clip supply cylinder with storage chambers and a clip feed track leading into communication with clip feed space **73** of clipper **11** as seen in FIG. **3**.

In FIG. **7** cylinder **80** is shown attached to plate **81**. The cylinder is revealed in cut away view to show clip supply chambers **82** and **83**. Cylinder **80** is manually rotatable about shaft **84** so that the clip supply chambers can be moved into position over clip feed track **85**. Clips are mounted on guide members such as guide member **86** in chamber **82**.

A stop ring **87** is provided so that the clip guides lie in correct alignment with the clip feed track **85**. This stop ring **87** is also shown in FIG. **6** and includes notched sections **88**. These notched sections lie in radial array around stop ring **87** and with respect to the clip supply chambers, in such a manner that spring loaded stop **89***a* can provide a fixed registration point for correct guide alignment with the clip feed track **85**.

Both clipper **11** and clip supply cylinder **80** are mounted by bolts, screws or other convenient means to adaptor **90** as seen in FIG. **7** and seen in isometric view in FIG. **1**. Opening **91** is provided in adaptor **90** for receipt of the lower portion of clipper assembly **11**. Opening **92** is provided for receipt of the upper portion of clip feed track **85** and opening **93** is provided for journaled receipt of the lower end of shaft **84**. Plate **81** has a corresponding opening through which shaft **84** passes and has an additional opening **95** through which the clips may pass.

All of the clip supply chambers are normally uncovered except for the chamber which is in communication with opening **92** and aligned over feed track **85**. This chamber is covered at its upper end by member **89** which is biased toward the cylinder's top by a resilient O-ring **110** which is pressed thereagainst by bolt **94** and washer **97**. Member **89** is pressed sufficiently tight against the cylinder's top to preserve vacuum in the subject chamber and in main vacuum chamber **39**. However, it is not pressed thereagainst so tightly that slidable movement is rendered difficult when the cylinder is rotated to align a new chamber with the clip feed track **85**.

Whenever the level of clips is below plate **81**, it is necessary to rotate the cylinder so that a chamber containing a complete supply of clips is positioned over the clip feed tracks **85** and opening **95**. In order to be able to conveniently note when the clip supply is low, it has been found advantageous to construct the cylinder **80** from clear plastic material. Cast acrylic type of plastic has been employed, however, other types of plastic including polycarbonate or polystyrene may also be used.

The clips employed in the clipping device are of conventional type and manufacture. They may vary in size for different applications and the clipper and clip supply apparatus may likewise be varied accordingly. Such clips are usually taped together **92** (FIG. **7**) along their closed ends so that a clip located in space **73**, as seen in FIG. **3**, will be held in that location by the tape itself and by the following clip to which it is taped. It will only travel downwardly when engaged by the drive member **62** (FIG. **3**) and thereby separated from the following clip in the row of clips. The taped clip supply is flexible so that it will slide down gravity feed track **85** and present a new clip in space **73** after the previous clip has been severed from the taped together clip supply.

Sequencing of Events and Sequencing Apparatus

Referring now to FIG. **2**, I have shown the preferred mechanical, electrical, and pneumatic apparatus for obtaining the proper event sequences in vacuum packaging and closing bagged products. Also reviewed are the apparatus elements to be sequenced as generally described in the preceding discussion.

The overall apparatus includes endless belt **13**, belt drive motor **30**, and drive motor clutch **31** and brake **100**. Also included are chain drive member **32**, hood member **12** (FIG. **1**), clipper assembly **11**, and clipper actuating rod **33**. Product locators **15** are employed and are attached in pairs around the belt **13** so that when the belt is stopped (by means to be subsequently discussed), a pair of locators **15** will lie in the sealing zone.

Additional elements are the hood actuation pneumatic cylinders **19**, the support piston rods **20**, and the piston tie bars **34** (FIG. **1**). These tie bars increase the rigidity of the hood actuating mechanism and provide a mounting means for drive mechanism actuating rod **35**, and vacuum means actuating block **36**.

Other apparatus includes the vacuum line **16** which extends into the interior of the apparatus and joins the vacuum manifold **37**. The manifold communicates with the vacuum chamber **39** through opening means **111** in the reinforcing plate **38** (which is attached to the frame **17**, FIG. **1**), and conveyor opening means **21**.

The further apparatus actuators, valves, switches, etc., which comprise the remainder of FIG. **2** will be described more completely in the following. These additional components are shown somewhat schematically for simplicity; in actual devices they are primarily located in control box **18** (FIG. **1**). And although the aforementioned and subsequently discussed components have proved particularly advantageous, it should be noted that other combinations and types of devices may be substituted to achieve the requisite functions.

Major events to be sequenced are (1) lowering the hood, (2) stopping the conveyor, (3) applying vacuum to the vacuum chamber, (4) clip sealing the bag's open end, (5) venting the chamber to atmospheric pressure, (6) raising the hood, and (7) restarting the conveyor. Sequencing is accomplished by employing sensing, signaling and actuating means wherein the condition of a preceding event controls the progression to a subsequent event.

After initially starting the conveyor (which is accomplished by conventional solenoid and switch means), the first action of the vacuumizing and closing cycle is to lower the hood. This takes place when striker **10**, attached to the lead locator **15** of a locator pair, strikes the arm of switch **23** as the locators pass underneath the belt in the embodiment shown.

Switch **23** is electrically connected to valve actuator **9** which, upon being energized, opens valve **40**. Valve

40 controls the pressure line to pneumatic cylinders 19 and, by being opened to atmosphere, allows hood member 12 to fall under the influence of gravity. Due to the damping action of air trapped within the cylinders 19, the hood drops slowly, rather than abruptly, into the path of the product locators.

During this time the belt has continued to move and has caused striker 10 to contact switch 41 for the second event. Switch 41 is connected to the clutch 31 and the brake mechanism 100 of belt drive motor 30 and, upon being activated, causes the motor clutch to be disengaged and the brake to be applied. This in turn causes the conveyor belt to stop.

Switch 41 is shown beneath switch 23 for clarity's sake. It should be noted that in actual practice it is located to the rear of switch 23 so that striker 10 contacts, first, switch 23, and then 41. Furthermore, it should be noted that switch 41 is positioned with respect to the strikers of the equidistantly spaced locator pairs and with respect to the vacuumizing zone so that it stops the conveyor at the correct time or position for (1) lining up the vacuum openings in the belt and reinforcing plate, (2) positioning the locators in the vacuumizing zones, and (3) aligning the locators properly with the hood borne clipping units.

The hood member completes the major portion of its descent after the belt is stopped to avoid interference with the product locators. Proceeding downwardly with the hood is the tie bar 34, to which is attached the motor actuating rod 35 and the vacuum actuating block 36.

Actuating rod 35 has an inset surface 43 and a raised surface 44. The actuating arm of switch 42 lies in this inset portion 43 when the hood and, hence, the block are in their up position. However, as block 36 descends, the actuating arm of switch 42 is raised onto surface 44 by switch cam element 112, thereby activating switch 42. The switch 42 is connected to the power input of drive motor 30 and upon being activated turns off the power to motor 30. This is a safety measure to prevent possible conveyor travel while the hood member is down.

At the bottom travel of the aforesaid components, the vacuum actuator block 36 strikes the switch 45 for the third major event. The switch is connected to vacuum valve actuator 46 which opens line 16 to the vacuum source (not shown). Air is then evacuated from chamber 39.

Tubing line 47 leads from vacuum manifold 37 to pressure sensitive switches 48 and 49. When a predetermined vacuum level commensurate with satisfactory vacuumizing has been reached in chamber 39 and, hence, manifold 37, pressure sensitive switch 48 is activated for the fourth major event, or bag closing. Valve 51 is opened to high pressure air line 52, through electrically connected valve actuator 50, and high pressure air between 40 and 80 psi is delivered from valve 51 through line 53 to the clipper assembly 11.

The clipper assembly has been previously moved downward into the vicinity of the bag neck 54 by the downward movement of the hood 12 as previously described. In one closure embodiment the clipper's engaging jaw is closed around the bag neck as the jaw actuating rod 33 (FIG. 3) is brought into contact with product locator engaging means 55 (FIG. 8). However in other embodiments the engaging jaws are closed by the action of an air cylinder mechanically connected thereto. In either of the above or other alternative cases, after the jaw is closed, high pressure air, as indicated, is introduced into clipper piston chamber 120 (FIG. 3) and the clip is delivered around the bag neck 54 and crimped to close off the bag neck and thereby preserve the vacuum which has been created within bag 56.

The application of high pressure air to the piston chamber of clipper 11 is continued until the bag has been satisfactorily closed and a predetermined pressure level (for instance 60 psi) reached in the clipper piston chamber. Then pressure sensitive switch 57 registers this pressure level through air line 58 and signals actuator 50 to close the high pressure feed air line 52 and open the vacuum line 26. The vacuum application returns the clipper piston and other components to their normal, out-of-operating condition.

Pressure sensitive switch 57 is also connected with the main vacuumizing chamber vacuum line actuator 46. After the predetermined pressure level has been created in clipper 11, switch 57 signals actuator 46 for the fifth major event. The valve associated with actuator 46 is closed to vacuum and opens line 16 so that the vacuum chamber 39 is vented to atmosphere.

When the chamber and hence the manifold 37 and line 16 have reached atmospheric pressure level, pressure sensitive switch 49, through connecting line 47, signals actuator 9 to open valve 40 to high pressure air for the next event. In this action cylinders 19 cause piston support rods 20 to ascend and to thereby raise the hood member 12.

As the hood is being raised, switch 45 is reset and switch 42 is returned to its normal engaging position with respect to inset face 43, thereby returning power to the belt drive motor 30. The final event in the cycle occurs as the actuator bar 35 continues its upward travel, when, at the proper height to allow the hood to clear the locators 15, striker 59 engages switch 60. This action disengages the clutch 31 and disengages the conveyor drive brake 100, thus causing the conveyor to resume its normal travel. The now bagged and vacuumized product 61 is delivered out of the vacuumizing zone.

After vacuumizing, the product may be subjected to conventional processing such as heat shrinking the biaxially oriented polymeric film often employed as bag material. The products may be lifted off the conveyor by hand and transported to subsequent processing stations. However, considerable benefit is realized when the bags are allowed to drop off the end of the conveyor onto another conveyor leading to a heat shrink, or other operation. The product locators 15 (FIG. 8), are particularly suited for this since the open U-shaped slots 22 (FIG. 8) allow the product to fall easily off the locator when it is inverted at the end of the conveyor.

Operation

Turning now to the operation of our packaging and closing procedure and by way of example to the preferred embodiment of our invention in packaging poultry products such as cleaned and dressed hens, a loading operator would sequentially remove individual bagged birds from a supply and place the bags with the

birds therein individually onto a product locating means **15** (FIGS. **1**, **2** and **8**). Each bag is positioned in its locator with the bottom of its outer closed end portion engaged between and against two spaced apart projecting crown members **115** and **116** as shown in FIG. **8**. The forward open end of the bag where it encompasses the neck end of the bird is retained cradled in the cut out cradle portion of the locator where it slopes upwardly as shown in FIG. **8**. The bag's open neck passes through the two vertical end pieces **117** and **118** which are spaced apart for receipt of the clipper jaw portions therebetween. The bag's neck passes through slots **22** in the end pieces **117** and **118** and is retained and positioned thereby. The bag's neck is thus engaged at two adjacent spaced spart areas. As shown the product locators are arranged in pairs and thus two locators would be loaded in succession. In this way the bag with a product or article therein is placed on a conveying means.

In the preferred form of practicing this invention with the preferred embodiment, once power is supplied to the apparatus the apparatus will cycle continuously as hereinafter described. The loaded pair of locators is thereby brought under hood **12**. The pair of loaded product locators is stopped in position under the hood **12** in the area where the vacuumizing of the product occurs by the striker **10** engaging the switch **23** on a companion pair of product locators signaling the actuating means **9** to stop the conveying means and lower the hood member onto the conveying means. In this way the conveyor is stopped in response to the bag thereon reaching a predetermined location and the hood means is then automatically brought into contact with the conveyor means to form a vacuum chamber therebetween and enclose the product.

As the hood **12** lowers onto the conveyor **13** the open throat space or means **66** (FIG. **3**) of each of the open ended clippers **11** straddles a respective bag neck where the bag neck passes through the two U-shaped slots **22** of the product locator. As the hood, and hence the clipper, reach their lower positions actuator **33** (FIG. **2**) strikes engaging surface **55** on a respective locator **15** and is driven upwardly against spring **70** rotating the jaw member **71** about pivot point **67** positioning the clipper anvil **63** in line for the receipt of a clip for closing the neck of the bag at a later time. The vertical path of actuator **33** is translated into the swinging motion of the jaw member by notch **68** being engaged by mechanical linkage **69**. Anvil **63** is a part of the jaw **71** and is also swung around so that it lies directly beneath and thereby encloses space **66** in which the bag neck is located and thereby enclosing the bag's neck region therein. The neck region of the bag is now mounted for closing and evacuation. The open space **66** and the slots **22** are of such dimension that ample and sufficient space or opening is left and remains for the air in the bag to escape therefrom to allow evacuation of the air. At the same time the cooperation of the clipper throat and the slots serve to retain the bag during its subsequent inflation during evacuation and restrict the outflow of gas from the neck region prior to clipping to assist in bringing about the inflation. Thus the dimension of the clipper throat and slots should be sufficiently restrictive respecting the outflow of air to cause or at least assist in causing the inflation of the bag if the exterior of the bag is subjected to reduced gas pressure.

When the hood member contacts the conveying means to form a vacuum chamber or confined zone therewith its position is sensed and actuating means are signaled to initiate the evacuation of air from manifold **37** and through opening **21** from chamber **39**. This is accomplished by engagement of the vacuum actuator block **36** with the switch **45** opening lines **16** through vacuum valve actuator **46**.

As the chamber is evacuated the bag inflates. This is effective in providing for the substantially complete evacuation of the bag because this prevents the normal drawing down of the neck of the bag onto the neck end of the bird preventing air trapped further down in the bag from escaping from the bag. It is believed that in principle this is because as evacuation of the chamber occurs the air pressure in the bag is higher than the air pressure outside of the bag within the confines of the vacuum chamber. Therefore the air in the bag inflates the bag and brings about its own escape. In this way the chamber **39** and the bag therein are vacuumized.

The vacuum level within the chamber is brought to a level previously determined, and by way of example 25 inches of mercury vacuum, by partial evacuation of the air from the confined zone and from the container over a period of, for example, 3 seconds to produce the desired degree of vacuumization within the bag. The bag is then closed in response to a predetermined level of air evacuation from the chamber. Actuating means are signaled by a means sensing the level of vacuum to actuate the bag closure means to close the neck of the bag. This is done through pressure sensitive switch **48** sensing the vacuum level in the manifold **37** which actuates valve **51** to its open position to high pressure air line **52**.

The clip is pressure closed to seal the bag through the application of high pressure air through line **52** to the piston **61** in chamber **120**. A clip is closed around each of the bag necks to preserve the vacuum level thus created in the bag. The clip is closed by a punch means engaging the closed end of the clip, delivering the clip downwardly in its track through the throat means around the bag neck located in space **66** and forcing the legs of the clip into bending contact with the anvil means **63** to crimp the clip and mechanically close off the bag neck. The clip serves as a sealant about the bag's neck.

Next a sensing is made that the closure means has satisfactorily closed and sealed each bag by detecting that a predetermined pressure level has been reached in each clipper piston chamber **120** to provide a satisfactory clip closing quality and pressure sensitive switch **57** is activated signaling actuator **50** to close the high pressure air line **52** and open the vacuum line **26** returning the clipper piston and other components to their retracted positions releasing the hold exerted thereby on the now clipped neck of the bag. Thus the closed clip is released in response to the sensing that the pressure provided to close the clip has reached a satisfactory clip closing quality. It will be understood that both clipper chambers **120** are directly connected to line **53** although for purposes of illustration only one chamber connection is shown. Pressure sensitive switch **57** also signals actuator **46** which opens or vents the

vacuum chamber **39** to atmosphere. In this way the chamber is vented to atmospheric pressure responsive to the bag being closed.

Next a sensing is made that the vacuum chamber has reached atmospheric pressure and actuating means are signaled to actuate the movement of the hood member from contact with the conveying means. When the chamber and manifold **37** reach atmospheric pressure, this is sensed by pressure sensitive switch **49** through connecting line **47**. Pressure sensitive switch **49** signals actuator **9** to open valve **40** to high pressure air to raise the hood. In this way the hood member is raised in response to atmospheric pressure being attained in the chamber. In respective clippers, spring **70** opens the gate **71** and the clipper throat clears the closed neck of the bag as the hood rises.

Next a sensing is made when the position of the hood member is such that its parts are clear of the bagged products and their locators. Actuating means are then signaled to actuate the conveying means to start. Switch **45** is reset, and switch **42** is activated to power the belt drive motor **30** as the hood rises and when the hood has raised sufficiently to clear the locators striker **59** engages switch **60** which disengages clutch **31** and conveyor brake **100** causing the conveyor to resume its normal travel transporting the bag container from the confined zone. In this way the conveyor means is started responsive to the hood member being raised transporting the closed bars away from the area where vacuumizing occurs.

The conveyor carries the locator and its striker **10** past switch **23** and this switch is then reset for the next cycle. The other locator in the pair does not have a striker on it so it passes the switch without initiating any action. When the hood reaches its fully up position with the pistons fully extended it is held in this position by the pressure in the cylinders.

During the time the vacuumizing and closing cycle is being carried out automatically the operator sequentially loads the next pair of product locators with two bagged birds as previously described. The two now packaged birds are removed from the conveyor either by tumbling off of the product locators as they pass under the conveyor or by being lifted off the conveyor by another operator. When the pair of freshly loaded product locators passes into position under the hood **12** the cycle is ready for its repetition.

It may be seen that in our preferred procedure the neck of the bag is confined and the initial escape of air from the bag is at least somewhat restricted. The pressure on the outside of the bag is reduced and the bag which contains gas, usually air, is inflated. The gas in the bag that caused the inflation is withdrawn until the quantity withdrawn permits the bag to be returned to at least substantially its initial dimensions while the reduced pressure is maintained on the outside of the bag. The bag is then mechanically closed to maintain the reduction in the internal gas. Then the reduced pressure is removed from outside the bag further constructing the dimensions of the bag.

While in accordance with the patent statutes, we have described what at present is considered to be the preferred embodiments of our invention, it will be obvious to those skilled in the art that numerous changes and modifications may be made therein without departing from the invention and it is therefore aimed in the appended claims to cover all such equivalent variations as fall within the true spirit and scope of the invention.

We claim:

1. A clipper comprising a pressure providing clip closing means and a means sensing when the pressure provided has reached a satisfactory clip closing quantity, a closed clip freeing means responsively connected to said means sensing when the pressure provided has reached a satisfactory clip closing quantity and responsive thereto to free a clip, means for mounting the neck region of a bagged product in at least somewhat gathered condition at two adjacent spaced apart areas, an open throat means movable to receive said neck region therein and a gate means for closing said throat means, said throat after closure being dimensioned to allow sufficient openness of said neck region to permit evacuation of gas therefrom prior to closing said bag with a clip and sufficiently restrictive to maintain said neck region captive and to cause the inflation of said bag due to internal gas if the exterior of the bag is subjected to reduced gas pressure, a conveying surface for transporting said bagged products, a hood member adapted for engagement with said conveying surface to form therewith a vacuum chamber, a vacuumizing means communicable with said vacuum chamber, at least one product locating means incorporated with said conveying surface, and wherein said clipper is air-operated and incorporated in said hood member and said sensing means includes elements that sense the air pressure in said air-operated clipper and said closed clip freeing means include elements that signal said air-pressure condition to actuating members, said members at a predetermined air pressure level freeing said closed clip and causing said gate means to open and venting said chamber to atmosphere.

2. An apparatus according to claim **1** including a frame member and a reinforcing member attached thereto wherein:

said conveying surface comprises an intermittently movable endless belt mounted in said frame member, said reinforcing member being positioned beneath at least a portion of said conveying surface, and said conveying surface including opening means communicable with said vacuum source,

said hood member is disposed above said endless belt and is reciprocably engageable therewith,

said product locating means include product support elements adapted for supporting and positioning said bag during the conveying, vacuumizing, and closing thereof, and

said apparatus includes sensing, signaling, and actuating means having

1a. elements for at least indirectly sensing the position of said product, and signaling means responsive to the position of said product for signaling actuating means to actuate the lowering of said hood member onto said belt, and signaling means responsive to the position of said product for signaling actuating means to actuate the stopping said conveyor,

1b. elements for sensing the position of said hood member, and signaling means responsive to the position of said hood member for signaling actuat-

ing means to actuate the vacuumizing of said chamber,

1c. elements for sensing the vacuum level in said chamber, and signaling means responsive to the vacuum level in said chamber for signaling actuating means to actuate the clipping of the neck of said bag,

1e. elements for sensing the air pressure in said vacuum chamber, and signaling means responsive to the air pressure in said vacuum chamber that signal actuating means to actuate the rising of said hood member, and

1f. elements for sensing the position of said hood member, and signaling means responsive to the position of said hood member that signal actuating means to actuate the starting of said belt.

said clipper's clip closing means includes a punch means for delivering an open ended clip around said bag neck, and said gate means includes an anvil means against which said punch means drives said clip to close the neck of said bag.

3. A clipping apparatus for closing the neck regions of bags and the like comprising means mounting said neck region in at least somewhat gathered condition at two adjacent spaced apart areas, an open throat means movable to receive said neck region therein, a gate means for closing said throat means and a clip applying means for moving a clip through said throat and about said neck region, said throat after closure being dimensioned to maintain said neck region captive and allow sufficient openness of said neck region to permit evacuation of gas therefrom prior to closing said bag with a clip, a vacuum chamber wherein said bag is positionable, means for at least partially evacuating air from said chamber, and sensing, signaling and actuating means for sequencing the events occurring in vacuumizing and closing said bag wherein the condition of a preceding event controls the progression to a subsequent event.

4. An apparatus according to claim 3 including a cover means and a surface member wherein said cover means contacts said surface member to form said vacuum chamber therewith, said surface member and said throat means, gate means and clip applying means are incorporated in said cover means.

5. A clipping apparatus for closing the neck regions of bags and the like comprising means mounting said neck region in at least somewhat gathered condition at two adjacent spaced apart areas, an open throat means movable to receive said neck region therein, a gate means for closing said throat means and a clip applying means for moving a clip through said throat and about said neck region, said throat after closure being dimensioned to maintain said neck region captive and allow sufficient openness of said neck region to permit evacuation of gas therefrom prior to closing said bag with a clip, a conveying surface for transporting said bag and products therein, a hood member adapted for engagement with said conveying surface to form a vacuum chamber therewith, means for at least partially evacuating air from said chamber, and sensing, signaling, and actuating means for sequencing the events occurring in at least partially evacuating the air from bags wherein products are located, wherein the sensing of a predetermined condition of of a preceding event, signals actuating means to actuate a subsequent event.

6. A method for vacuumizing and closing containers including:

a. transporting said container into a confined zone,

b. at least partially evacuating the air from said confined zone and from said container,

c. mechanically closing said container by clipping including closing the clip, sensing when the pressure provided has reached a satisfactory clip closing quality, releasing the closed clip responsive thereto, and

d. transporting said container from said confined zone.

7. A method for vacuumizing and closing bags in which products are located employing a conveying means and a hood member, wherein said product is located on said conveying means at least during the vacuumizing thereof, said method comprising:

a. stopping said conveying means responsive to said bag thereon reaching a predetermined location,

b. bringing said hood member into contact with said conveyor means responsive to said bag reaching a predetermined location,

c. vacuumizing said bag responsive to said hood member contacting said conveying means to form a vacuum chamber therewith,

d. closing said bag responsive to said chamber being vacuumized to a predetermined level,

e. venting said chamber to atmospheric pressure responsive to said sensing that the pressure provided has reached a satisfactory clip closing quality,

f. raising said hood member responsive to atmospheric pressure in said chamber, and

g. starting said conveyor means responsive to said hood member being raised.

8. A method for sequencing events in an apparatus for vacuumizing and closing bagged products including a hood means, conveying means, product locating means incorporated with said conveying means, vacuum means, and mechanical closing means incorporated in said hood means wherein the neck region of the bags enclosing said bagged products is provided with sufficient opening to permit evacuation of air from said bag prior to closing comprising:

a. sensing the position of said product locators with respect to the area where the vacuumizing of said product occurs and signaling actuating means to actuate said conveying means to stop and said hood member to lower onto said conveying means straddling said neck region with the throat means and enclosing said neck region therein,

b. sensing the position of said hood member with respect to said conveying means and signaling actuating means to actuate vacuumization to begin when said hood member contacts said conveying means to form a vacuum chamber therewith,

c. sensing the vacuum level in said vacuum chamber, and signaling actuating means to actuate said mechanical closure means to move the clip through the throat means and close it about said neck region when a pre-selected vacuum level has been created in said chamber,

d. sensing when said closure means has satisfactorily closed said bag and signaling actuating means to actuate the venting of said chamber to atmosphere,

e. sensing when said vacuum chamber has reached atmospheric pressure and signaling actuating means to actuate the movement of said hood member from contact with said conveying means, and

f. sensing the position of said hood member and signaling actuating means to actuate said conveying means to start.

* * * * *