United States Patent

Hilgers

[15] **3,689,862**

[45] **Sept. 5, 1972**

[54] **STACKABLE COIL FORM**

[72] Inventor: **Raymond H. Hilgers,** Hoffman Estates, Ill.

[73] Assignee: **Precision Paper Tube Company,** Wheeling, Ill.

[22] Filed: **Jan. 20, 1971**

[21] Appl. No.: **103,360**

[52] **U.S. Cl.** **336/208,** 242/118.41, 242/118.7, 336/198

[51] **Int. Cl.**.....**H01f 27/30**

[58] **Field of Search** .336/196, 198, 208; 242/118.41, 242/118.7

[56] **References Cited**

UNITED STATES PATENTS

358,705	3/1887	Smith	242/118.41
2,636,695	4/1953	Bixby	242/118.41
2,781,986	2/1957	Bixby	242/118.41
2,712,804	7/1955	Cone	242/118.7
3,430,886	4/1969	Sweeney	242/118.41 X

Primary Examiner—E. A. Goldberg
Attorney—Dawson, Tilton, Fallon & Lungmus

[57] **ABSTRACT**

A molded plastic coil form is provided with a pair of end flanges to permit a plurality of such coil forms to be interconnected or stacked. A pin portion extends outwardly from one of the end flanges, and an opening extends inwardly through the other end flange. The pin portion and opening are sized to permit the pin of one coil form to be received by the opening of another coil form, and a plurality of coil forms can be joined by inserting the pin portion of each coil form into the opening of the adjacent coil form. One of the flanges is smaller than the other, and the other flange is recessed to non-rotatably receive the smaller flange as the coil forms are joined. At least one wire is imbedded in the recessed end flange and extends outwardly from the end flange generally perpendicularly to the tubular portion.

12 Claims, 9 Drawing Figures

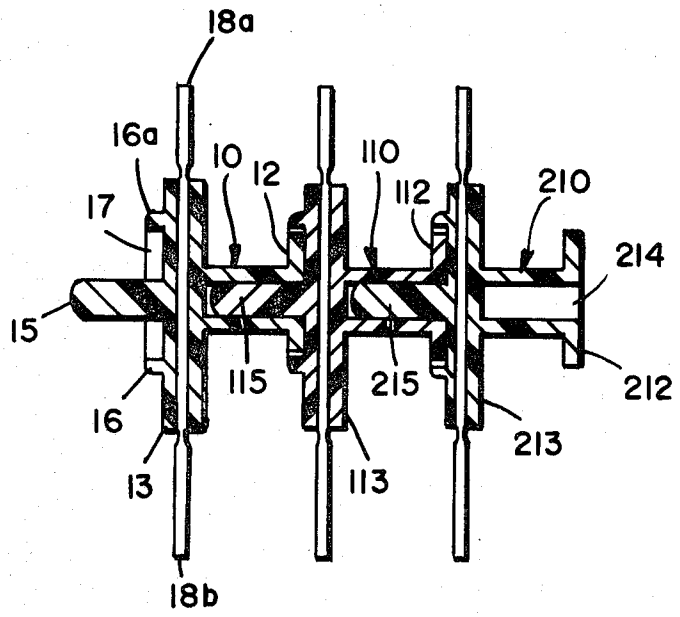

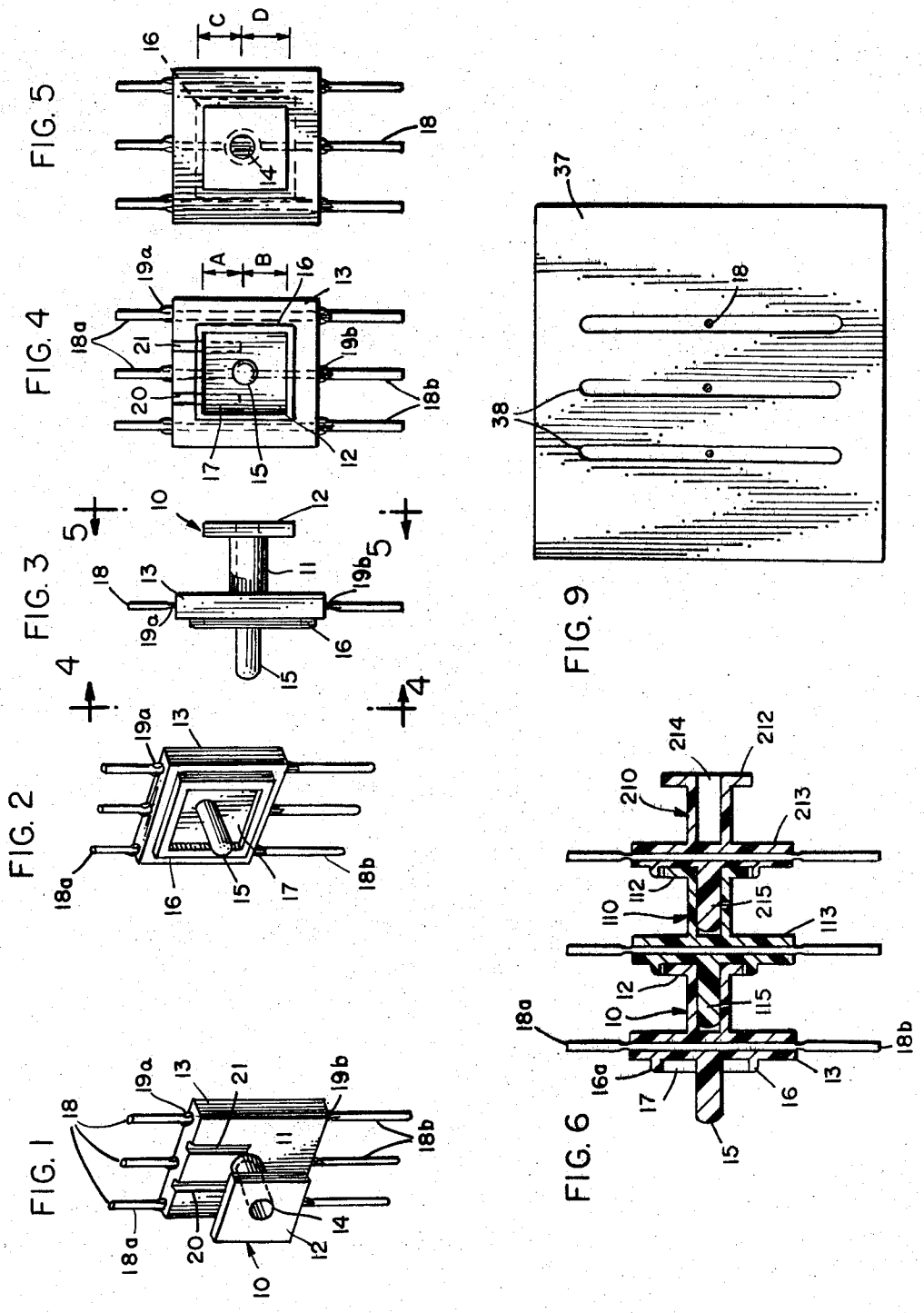

INVENTOR:
RAYMOND H. HILGERS
BY
Dawson, Tilton, Fallon & Lungmus
ATTYS.

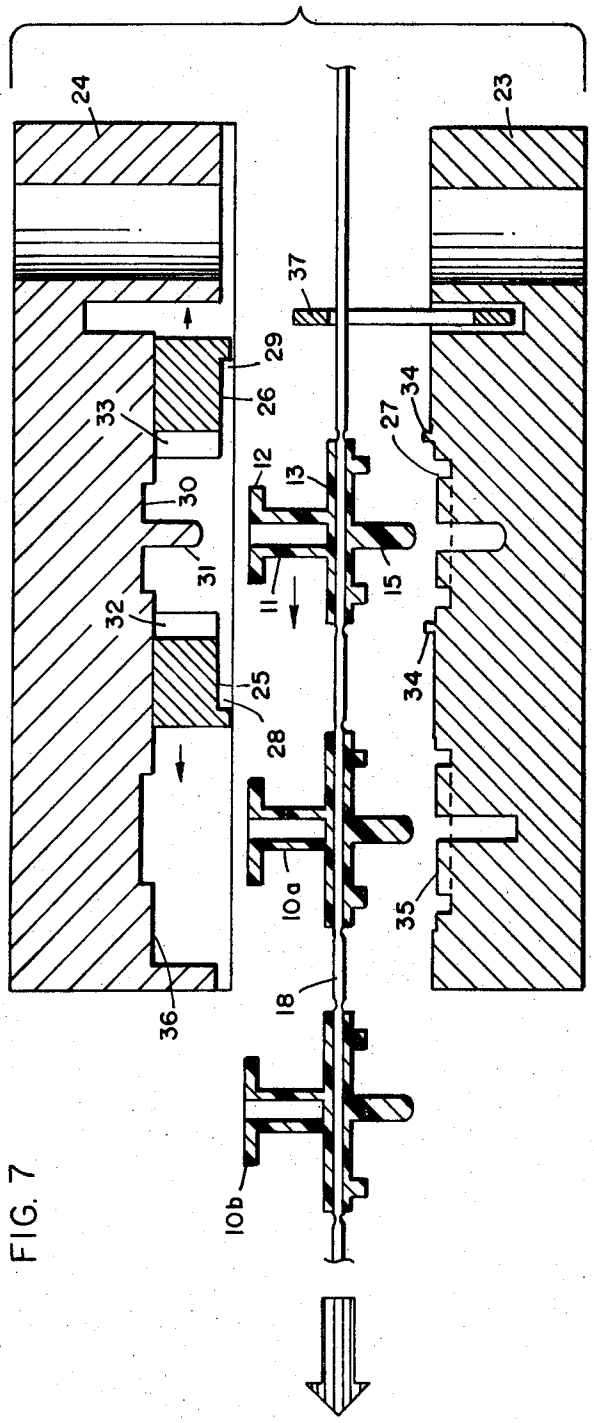

FIG. 7

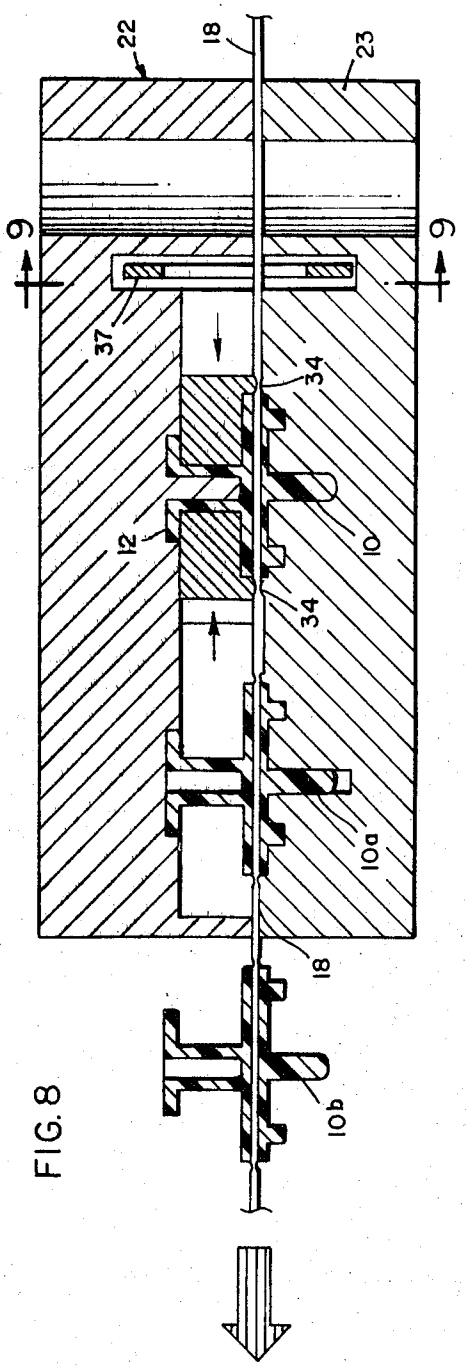

FIG. 8

INVENTOR:
RAYMOND H. HILGERS
BY
Dawson, Tilton, Fallon & Lungmus
ATT'YS

STACKABLE COIL FORM

BACKGROUND AND SUMMARY

In my prior U.S. Pat. No. 3,517,365 I disclosed a molded plastic coil form having a pair of end flanges with wires embedded therein. The coil forms disclosed in this patent were formed by advancing the wires into a two-part mold generally perpendicular to the parting line of the mold. The embedded wires provide a means for connecting the relatively fine wire wound about the coil form with the heavier conductors employed to integrate the inductance into an electrical circuit.

The coil forms which are the subject of this invention not only have wires embedded in one of the end flanges thereof, but a plurality of these coil forms can be interconnected or "stacked" to permit simultaneous winding of a plurality of coil forms or to enable a plurality of inductances to be joined as desired. Further, the wires which become embedded in the end flange are advanced in a direction parallel to the parting line of the mold and are crimped but not severed as the mold closes. As each coil form is formed, the wire and the completed coil form can be advanced together away from the molding station.

DESCRIPTION OF THE DRAWING

The invention will be explained in conjunction with an illustrative embodiment shown in the accompanying drawing in which

FIG. 1 is a perspective view of a coil form formed in accordance with the invention;

FIG. 2 is a perspective view of the other side of the coil form;

FIG. 3 is a side elevational view of the coil form;

FIG. 4 is an end elevational view taken along line 4—4 of FIG. 3;

FIG. 5 is an end elevational view taken along the line 5—5 of FIG. 3;

FIG. 6 is a sectional view of a plurality of stacked coil forms;

FIG. 7 is a sectional view through the mold illustrating one of the steps in the molding operation;

FIG. 8 is a view similar to FIG. 7 illustrating another step in the molding operation; and

FIG. 9 is a sectional view taken along the line 9—9 of FIG. 8.

DESCRIPTION OF SPECIFIC EMBODIMENT

Referring to FIGS. 1–6, the numeral **10** designates generally a coil form manufactured in accordance with the invention. The coil form includes a tubular central or body portion **11** and a pair of end flanges **12** and **13** spaced axially along the length of the tubular portion **11**. The end flange **12** is provided with a central opening **14** which extends generally coaxially into the body portion **11**, and a tubular pin portion **15** extends outwardly from the end flange **13** generally coaxially with the body portion.

The end flange **13** includes a perimetrically extending rib or shoulder **16** on the outer face of the flange, and the rib **16** defines a recess **17** shaped substantially the same as the periphery of the end flange **12**. A plurality of tie-in wires **18** extend through the end flange **13** generally perpendicular to the axis of the body portion **11**, and each wire is crimped as at **19*a*** and **19*b*** adjacent the points at which it extends outwardly from the end flange to provide the wire with better holding strength and to ensure against pull out from the end flange. The wires have relatively short upper portions **18*a*** extending upwardly from the flange **13** and relatively longer portions **18*b*** extending downwardly from the flange. The short wire portions **18*a*** can conveniently be used for connecting the leads of the coil to the circuit, and the longer wire portions can be used to plug the coil into a socket or the terminals of a printed circuit board.

The opening **14** in the end flange is sized just slightly larger than the pin **15** so that the pin of one coil form can be inserted into the opening **14** of another coil form. Further, the end flange **12** is sized to be received in the recess **17** defined by the perimetric rib **16**. In the particular embodiment illustrated, the end flange **12** and the recess **17** are rectangular, and a pair of coil forms are secured against rotational movement when the end flange **12** of one of the coil forms is received in the recess **17** of the other. If desired, however, the end flange **12** and the recess **17** could be circular or have some other configuration, and relative rotational movement between coil forms could be prevented by making the pin **15** and the opening **14** non-circular.

A plurality of coil forms **10**, **110** and **210** are shown stacked or interconnected in FIG. **6**. The pin portion **115** of the coil form **110** is received in the opening **14** in the coil form **10**, and the end flange **12** of the coil form **10** is received in the recessed end flange **113** of the coil form **110**. Similarly, the pin portion **215** of the coil form **210** is received in the opening in the end flange **112** of the coil form **110**, and the end flange **112** is received in the recess provided in the end flange **213** of the coil form **210**.

Any desired number of coil forms can be stacked as shown in FIG. **6**. Since the coil forms are secured against relative rotation, a coil can be wound simultaneously about each of the coil forms by rotating one of the coil forms while individual wires are fed onto the tubular portions. The completed inductances can then be separated for use individually as desired, and the ends of each coil can be secured to the wires **18** to facilitate electrical connection with the heavier wire of an electrical circuit. If desired, a tuning core can be inserted into the opening **14** of the coil form to provide a variable inductance.

The inner face of the flange **13** can be provided with a pair of recesses or slots **20** and **21** (FIG. **1**) extending tangentially upwardly from opposite sides of the tubular portion for accommodating the lead end of the wire which is to be wrapped about the tubular portion. The slot **20** or **21** is used depending upon whether the wire is wrapped counterclockwise or clockwise as viewed in FIG. **1**, and the lead is thereby prevented from interfering with subsequent turns of the wire. The lead can extend upwardly in the appropriate slot and be connected to one of the short wire portions **18*a***.

Rather than using the inductances separately, a number of inductances having the same or different values can be joined as shown in FIG. **6** for integration into a circuit as a single component. The wires **18** of each coil form permit the individual coils to be connected to each other or to other components in the circuit.

Referring to FIG. 6, the thickness of the end flange 12 is seen to be substantially the same as, or slightly less than, the length of the recess 17, i.e., the thickness of the rib 16. Accordingly, when a pair of coil forms are stacked, the rib extends adjacent to or beyond the inner surface of the small end flange to eliminate any undesirable ledges or shoulders which may interfere with the winding operation. Further, the outer edge of the rib 16 is advantageously rounded or curved as at 16a so that any turns of the wire which may be wrapped about the rib will tend to slide into the area between the end flanges.

In one particular embodiment of the invention, the tubular body portion 11 was cylindrical and had a diameter of about 0.125 inch. The flange 12 was generally rectangular but was offset slightly downwardly as viewed in FIG. 4 from the axis of the opening 14 and the tubular body portion 11. The upper edge of the end flange 12 as viewed in FIG. 4 was spaced a distance A of about 0.125 inch from this axis, and the lower edge was spaced a distance B of about 0.156 inch. The side edges of the flanges were equally spaced from the axis and were spaced apart a distance of about 0.250 inch.

The recess 17 was similarly offset slightly downwardly from the axis of the pin 15 and the tubular body portion, the inside of the upper portion of the perimetric rib being spaced a distance C of about 0.128 inch from the axis and the inside of the lower portion of the rib being spaced a distance D of about 0.159 inch from the axis. The side portions of the rib were spaced about 0.255 inch apart.

Offsetting the end flange 12 and the recess 17 slightly downwardly from the axis of the coil form ensures that the coil forms will be stacked with all of the lead-receiving slots 20 and 21 pointing in the same direction to facilitate the gang winding operation.

The pin portion 15 of the specific embodiment was cylindrical and had a diameter of about 0.070 inch, and the opening 14 had a diameter of about 0.075 inch. The thickness of end flange was about 0.035 inch and the thickness of the perimetric rib 16 was also about 0.035 inch. The outer edge 16*a* of the rib was rounded along a radius of about one sixty-fourths inch.

The coil forms can be produced by the mold 22 illustrated in FIGS. 7 and 8. The mold 22 includes a stationary mold half 23, a movable mold half 24, and a pair of movable side cores 25 and 26. The mold halves 23 and 24 are movable vertically relative to each other as viewed in FIGS. 7 and 8, and the side cores 25 and 26 can move vertically with the mold half 25 as well as horizontally toward and away from each other.

The parting line of the mold is defined by the bottoms of the side cores 25 and 26 and the upper surface of the stationary mold 23, and the mold is designed to position the parting line approximately in the middle of the end flange 13. The stationary mold 23 is provided with a recess 27 for forming one half of the end flange 13 and the pin portion 15, and the side cores 25 and 26 are provided with recesses 28 and 29 for forming the other half of the end flange 13. The movable mold 24 is provided with a recess 30 for forming the end flange 12 and a core pin 31 for forming the opening 14. The body portion 11 of the coil form is formed by semi-cylindrical recesses 32 and 33 in each of the side cores.

The desired number of wires 18 are advanced into the mold when the mold halves are separated, and as the mold halves are closed, the wires are crimped at each end of the recess 27 by ribs 34 which extend upwardly from the stationary mold half. Suitable plastic having insulating characteristics is then injected into the cavity formed by the mold halves and the side cores in the conventional manner to form the coil form 10 illustrated in FIG. 8. Previously formed coil forms 10*a* and 10*b* remain joined to the new coil form 10 by the wires 18, and the stationary mold half and movable half are provided with suitable cavities 35 and 36, respectively, to permit closing of the mold without interfering with the previously formed coil forms.

After the coil form 10 is completed, the mold half 24 and the side cores 25 and 26 are raised, the side cores are separated, and the coil form 10 is ejected from the mold half 24 by conventional ejector pins (not shown).

FIG. 7 shows the relative position of the coil forms and the mold parts after the coil form 10 has been ejected. Thereafter, the coil forms and the wires 18 are advanced to the left to bring the coil form 10 into the position previously occupied by the coil form 10*a*. The side cores are then closed and the mold half 24 is lowered to begin a new cycle.

The wires 18 move up and down with the completed coil form and are maintained in the desired alignment relative to the mold cavities by a comb 37. Referring to FIG. 9, the comb is provided with a vertically extending slot 38, for each of the wires 18 to permit the wires to move vertically while restraining the wires against horizontal motion.

The wires can be fed from a suitable source, and since the wires are inserted between the mold halves along the parting line, the wires need not be severed as each coil form is molded. This permits the coil forms to be removed from the mold and advanced in stepwise fashion by virtue of the interconnection provided by the wires, and the wires can be severed as a subsequent step.

While in the foregoing specification, a detailed description of a specific embodiment of the invention has been set forth for the purpose of illustration, it will be understood that many of the details hereingiven may be varied considerably by those skilled in the art without departing from the spirit and scope of the invention.

I claim:

1. An integrally molded plastic coil form having a pair of ends comprising a generally tubular body portion, a pair of axially spaced flanges extending from the body portion generally perpendicularly to the axis thereof, and a pin portion extending from one end of the coil form, the other end of the coil form being provided with an inwardly extending central opening, the size of the opening being slightly greater than the pin portion whereby the opening may receive the pin portion of another coil form, one of the end flanges being larger than the other end flange and said one end flange having an axially inwardly extending recess having a shape corresponding to the shape of the other end flange whereby the recess may receive the other end flange of another coil form.

2. The coil form of claim 1 in which the pin portion extends from the flange having the recess, the opening extending through the other end flange.

3. The coil form of claim 1 in which said recess is defined by a perimetric rib extending axially outwardly from said one flange, the other end flange of another coil form being receivable by the perimetric rib and the rib having a curved outer edge whereby wire wrapped about the rib tends to slip axially off the rib.

4. The coil form of claim 1 in which the recess and the other end flange are non-circular whereby the recess can non-rotatably receive the other end flange of another coil form.

5. The coil form of claim 1 in which the center of the recess and the center of the other flange are offset from the axis of the body portion.

6. An integrally molded plastic coil form having a pair of ends comprising a generally tubular body portion, a pair of axially spaced flanges extending from the body portion generally perpendicularly to the axis thereof, a wire embedded in one of the end flanges and extending generally perpendicularly to the axis of the tubular portion, and a pin portion extending from one end of the coil form, the other end of the coil form being provided with an inwardly extending central opening, the size of the opening being slightly greater than the pin portion whereby the opening may receive the pin portion of another coil form.

7. An integrally molded plastic coil form having a pair of ends comprising an exposed generally tubular body portion and a pair of axially spaced generally flat end flanges extending from the body portion generally perpendicularly to the axis thereof, one of the end flanges being larger than the other end flange and said one end flange having an axially inwardly extending recess having a shape corresponding to the shape of the other end flange whereby the recess may receive the other end flange of another coil form.

8. The coil form of claim 7 in which the recess and the other end flange are non-circular whereby the recess can non-rotatably receive the other end flange of another coil form.

9. The coil form of claim 6 in which the wire includes crimped portions adjacent the points at which the wire extends from said one flange whereby relative sliding movement between the wire and said one flange is restrained.

10. An integrally molded plastic coil form comprising a generally tubular body portion, a pair of axially spaced end flanges extending perpendicularly from the body portion at opposite ends thereof, one of the end flanges being provided with an opening extending inwardly toward the other end flange, a pin portion extending outwardly from the other end flange, the size of the opening being slightly greater than the size of the pin portion whereby the opening may receive the pin portion of another coil form, one of the end flanges having a transverse extent greater than that of the other end flange and having a recess sized slightly greater than the other end flange whereby the recess may receive an end flange of another coil form, and a wire embedded in the end flange having the recess and extending outwardly from the end flange generally perpendicular to the axis of the body portion.

11. The coil form of claim 10 in which the pin portion extends from the flange having the recess and extends generally coaxially with the body portion, the opening extending through the other end flange generally coaxially with the body portion.

12. The coilform of claim 10 in which the recess is defined by a perimetric shoulder extending axially outwardly from the flange and having a thickness substantially equal to the thickness of the other end flange.

* * * * *