United States Patent

Casson, Jr.

[15] 3,682,079

[45] Aug. 8, 1972

[54] **AUTOMATIC LITHOGRAPHIC PLATE DEVELOPING MACHINE**

[72] Inventor: **Edward A. Casson, Jr.,** Airpark Drive, Easton, Md. 21601

[22] Filed: **April 9, 1969**

[21] Appl. No.: **814,566**

[52] **U.S. Cl.** .....**95/89 R,** 95/94 R

[51] **Int. Cl.** **G03d 5/06**

[58] **Field of Search** 95/89, 94; 118/240, 241, 242; 101/463

[56] **References Cited**

UNITED STATES PATENTS

773,607	11/1904	Wade	118/240
1,651,627	12/1927	Parks	118/241 X
2,006,364	7/1935	Morse	118/240 X
2,056,584	10/1936	Murck	95/94
2,555,874	6/1951	Coughlin	95/89
2,577,793	12/1951	Miller	118/240 X
3,218,950	11/1965	Liedl et al.	95/94 X
3,313,913	4/1967	Limberger	95/89 X
3,448,720	6/1969	Graham	118/314 X

Primary Examiner—John M. Horan
Assistant Examiner—Alan A. Mathews
Attorney—Shlesinger, Arkwright & Garvey

[57] **ABSTRACT**

A lithographic plate automatic developing machine having a plurality of feed rollers for conveying on exposed lithographic plate and a rotating and oscillating cylindrical member having a flexible peripheral surface which contacts the exposed surface of the lithographic plate for applying a developing solution thereto and for building up an image thereon. Rinsing means are provided for washing the developing solution from the plate and a gumming solution is applied to the developed surface by way of the periphery of one of the feed rollers sequentially engaging the solution and applying it to the developed surface prior to feeding the developed plate from the machine.

2 Claims, 12 Drawing Figures

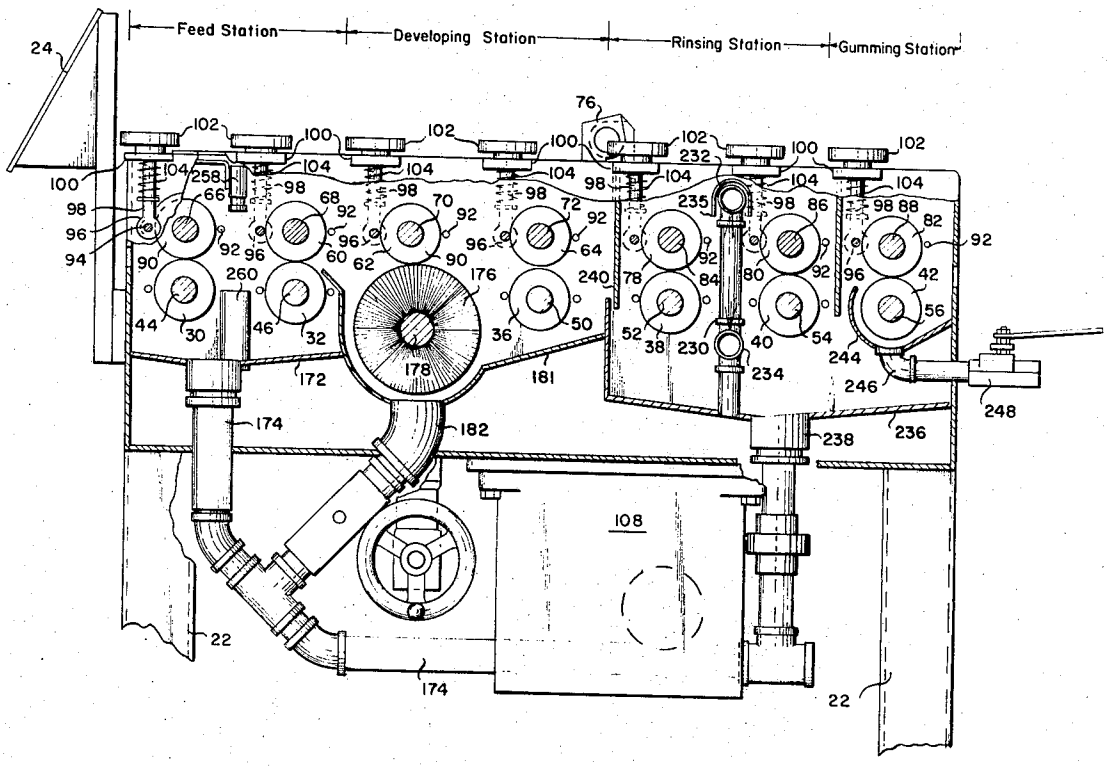

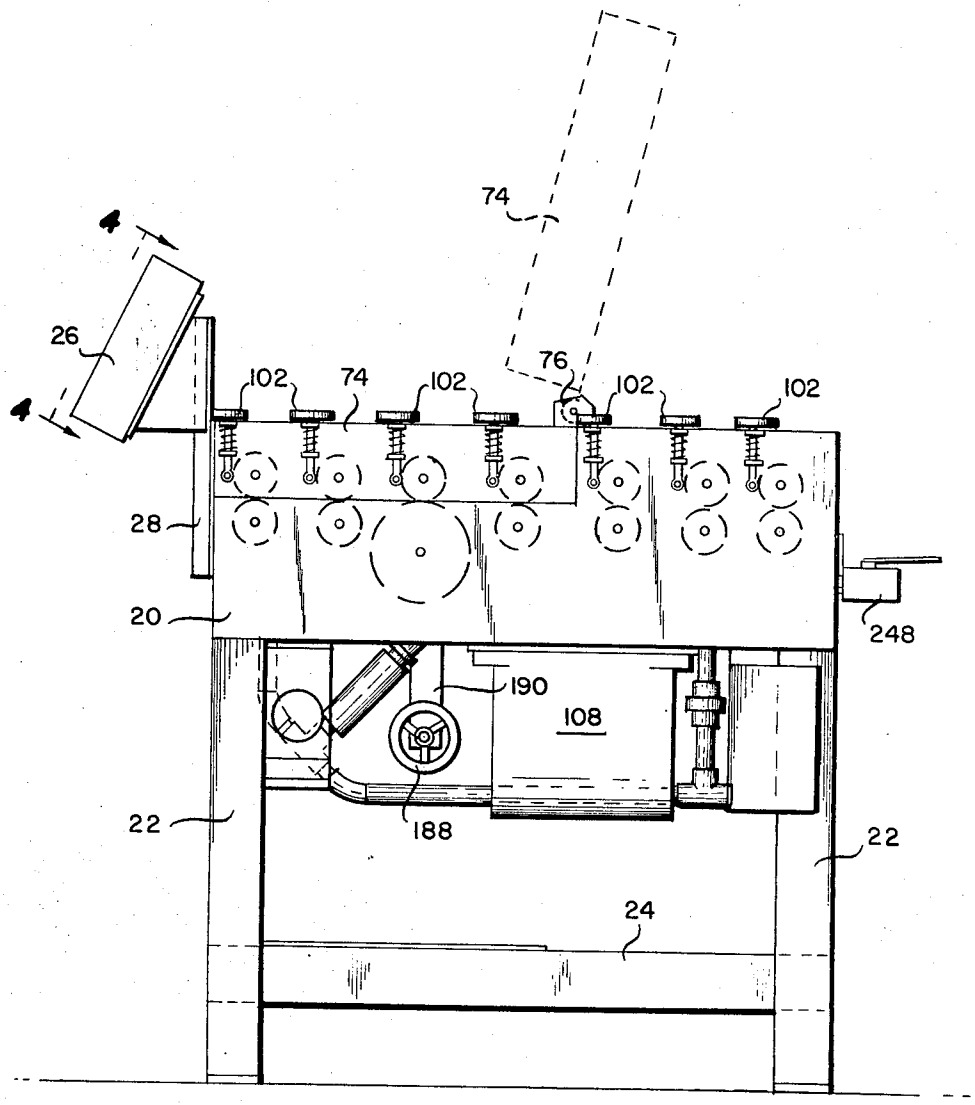

Fig. 1

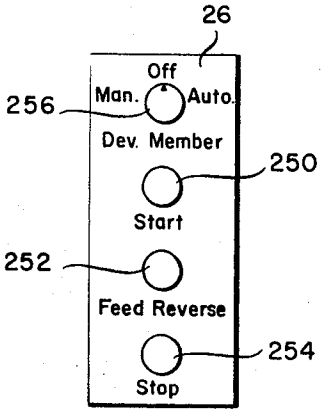

Fig. 4

INVENTOR
Edward A. Casson, Jr.

BY Schlesinger, Cobourn & Gauvey

ATTORNEYS

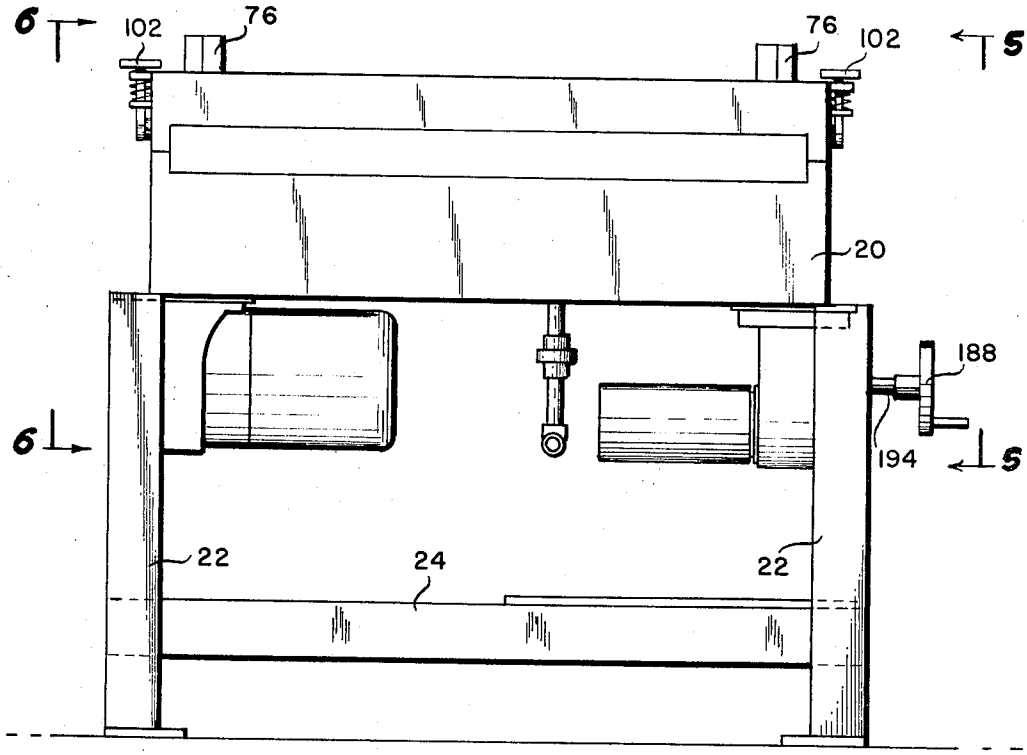

Fig. 2

Fig. 3

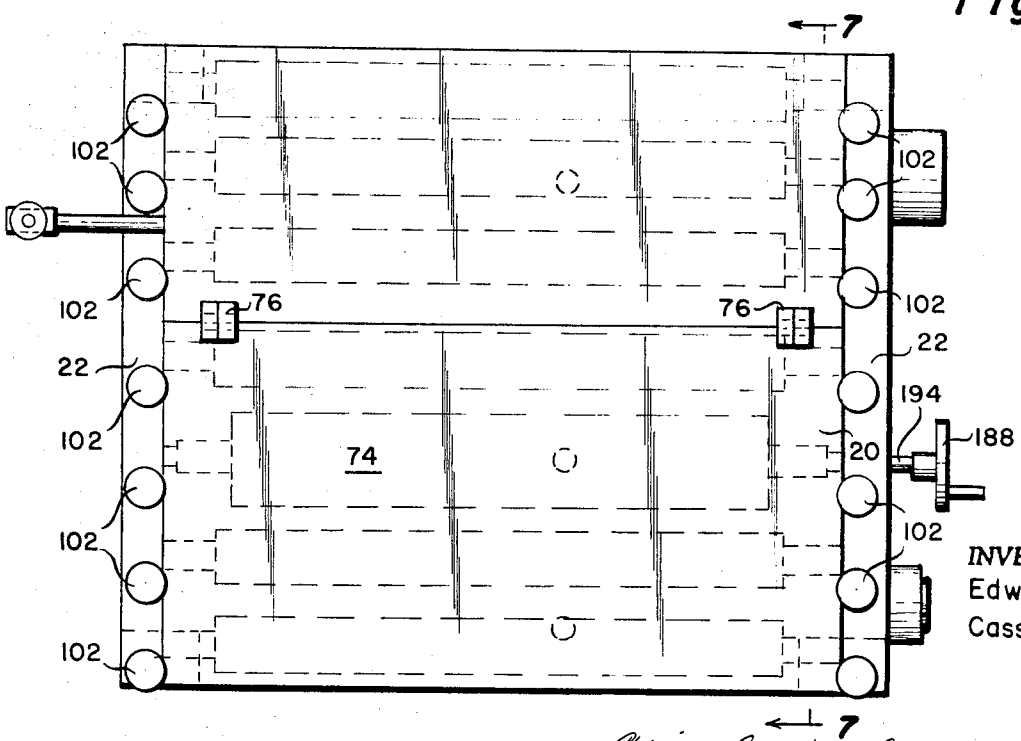

INVENTOR
Edward A.
Casson, Jr.

Pilkington, Arkwright & Gawey ATTORNEYS

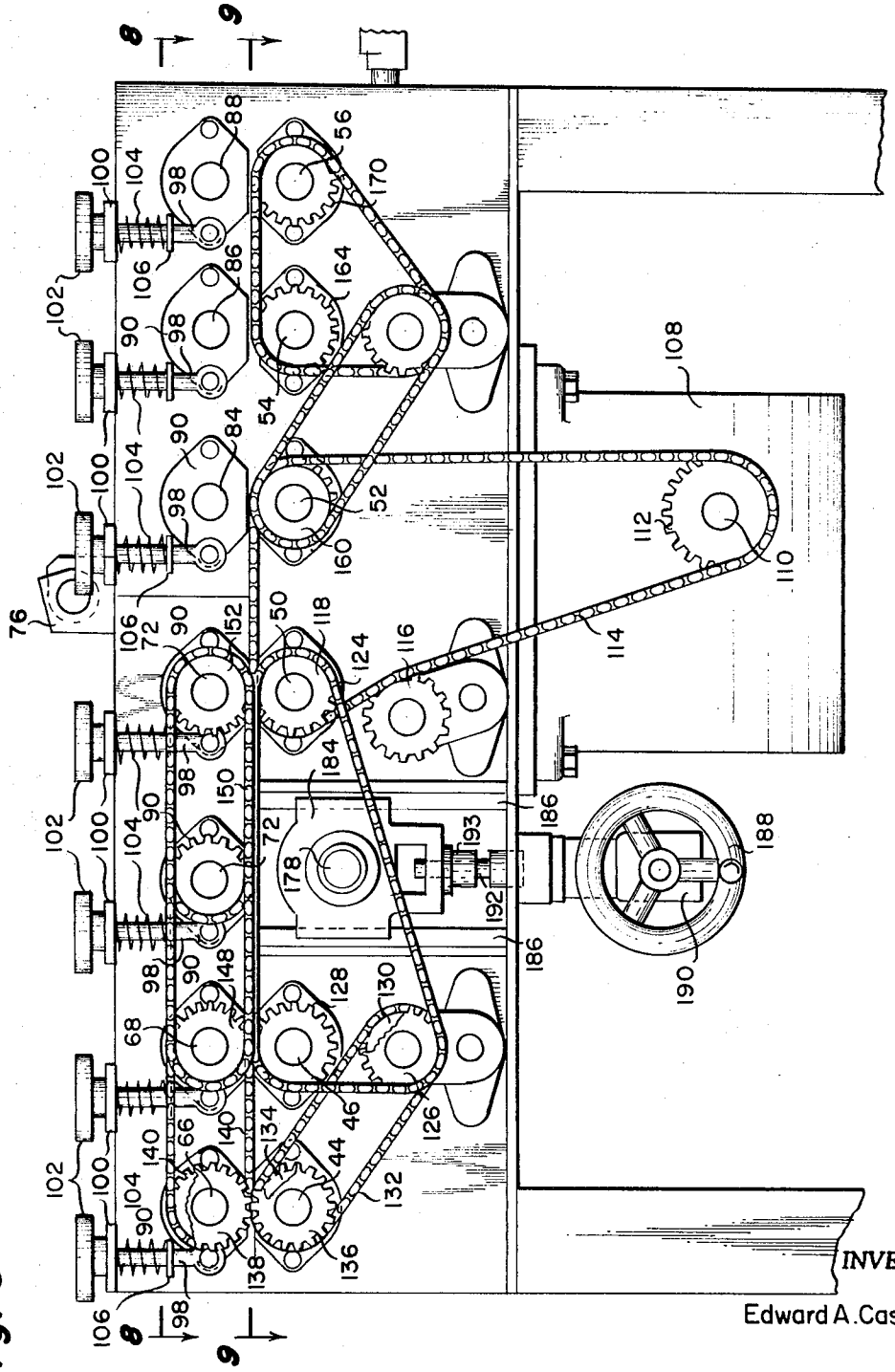

Fig. 5

INVENTOR

Edward A. Casson, Jr.

BY Schlesinger, Arkwright & Garvey

ATTORNEYS

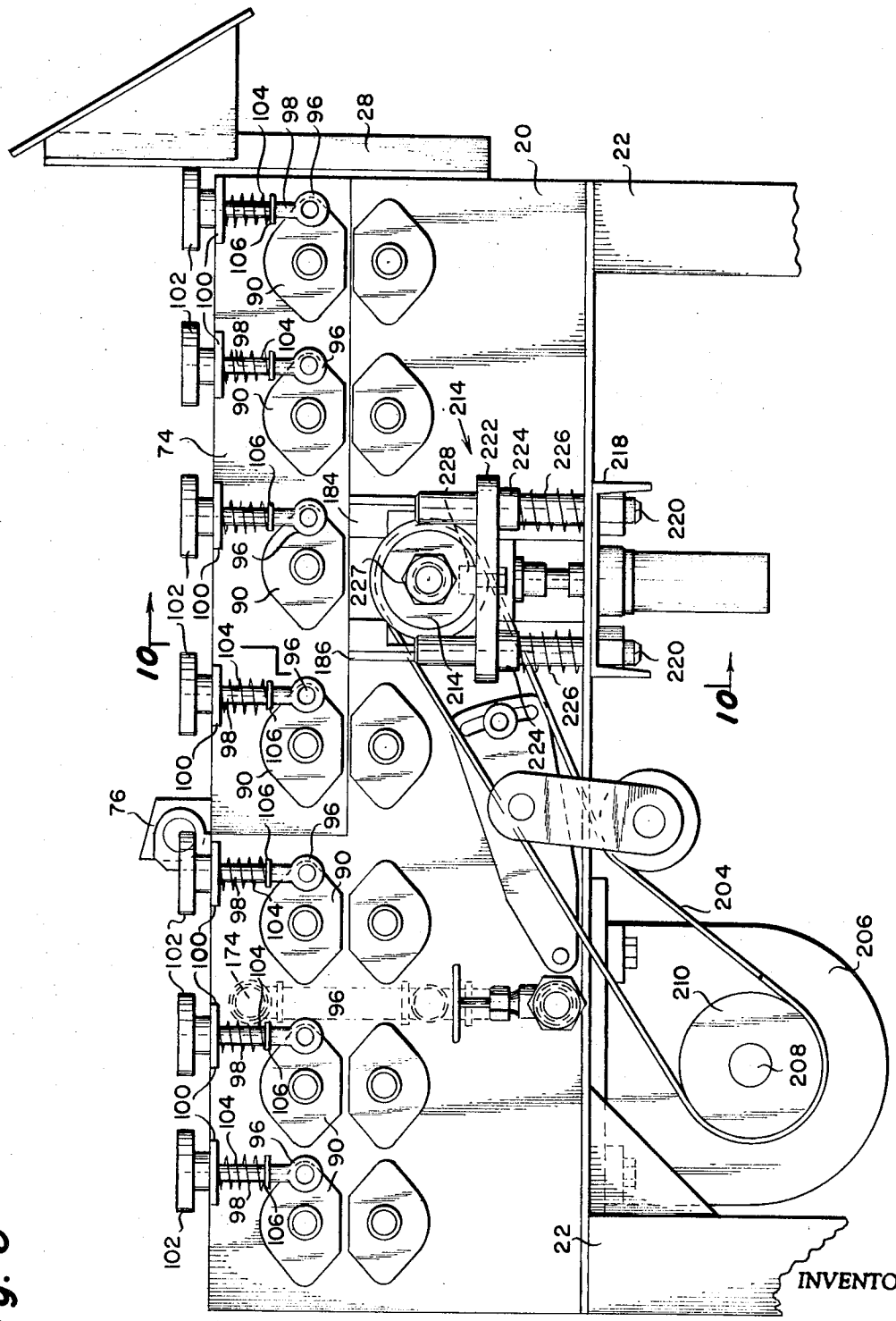

Fig. 6

INVENTOR

Edward A. Casson, Jr.

BY Schlesinger, Ashcright & Fancy

ATTORNEY

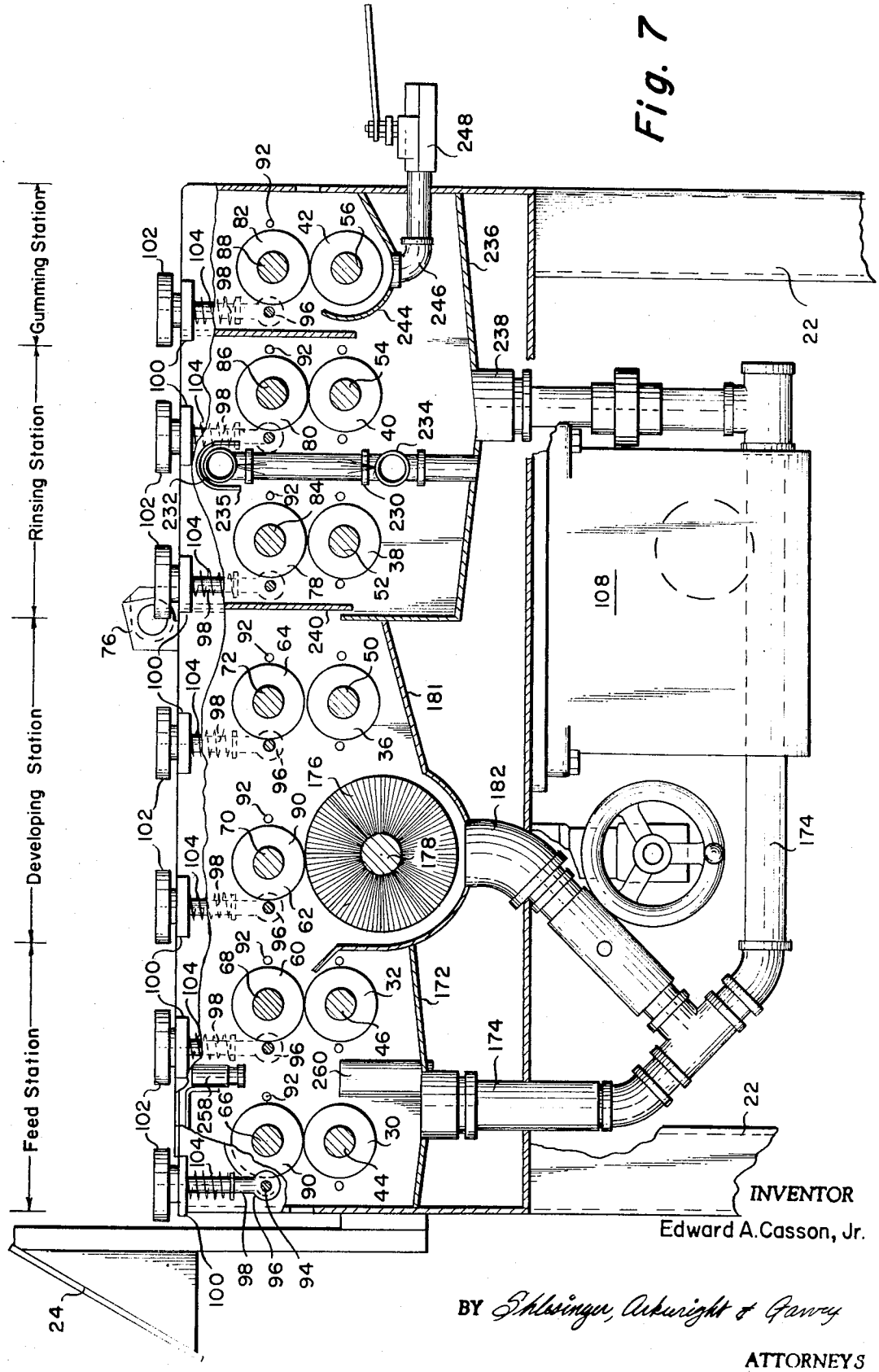

Fig. 7

INVENTOR
Edward A. Casson, Jr.

BY Schlesinger, Arkwright & Garvey

ATTORNEYS

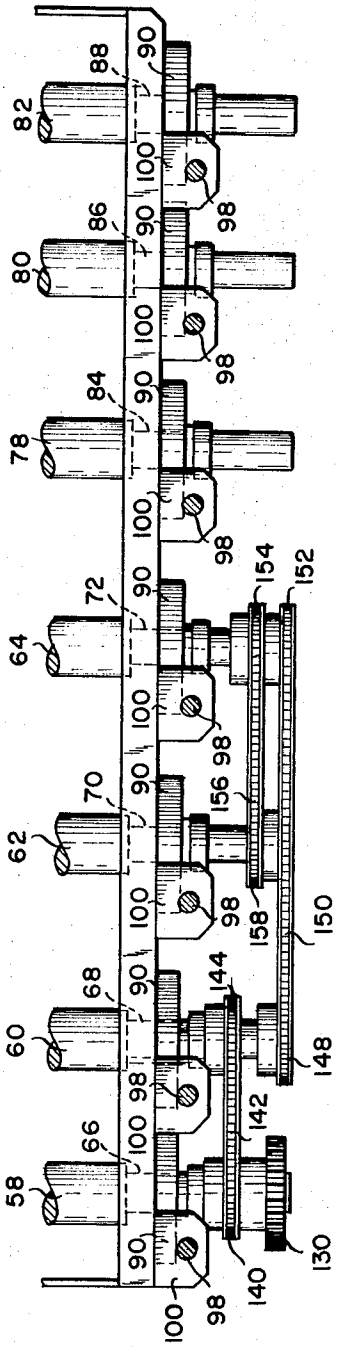

Fig. 8

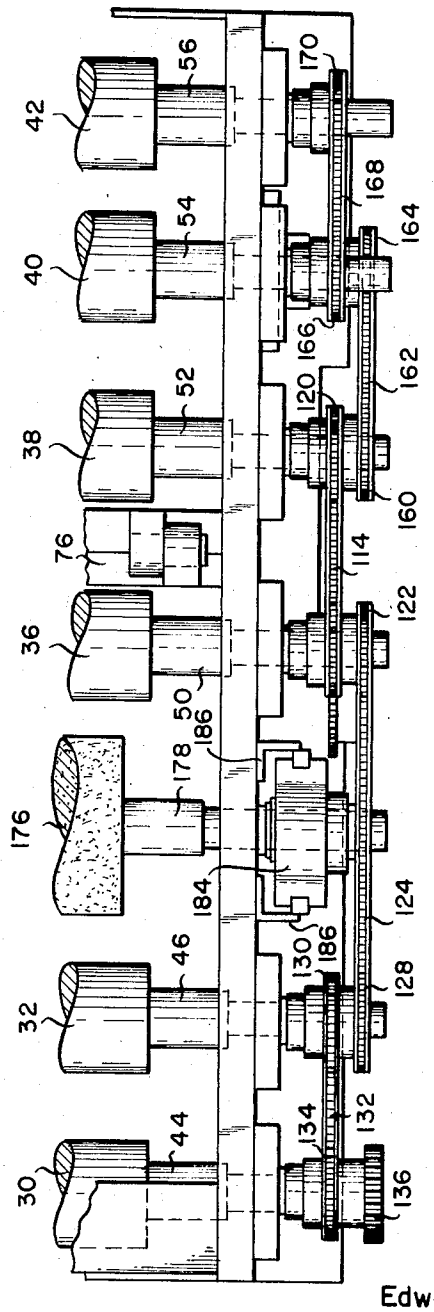

Fig. 9

INVENTOR
Edward A. Casson, Jr.

BY Schlesinger, Albright & Garvey

ATTORNEYS

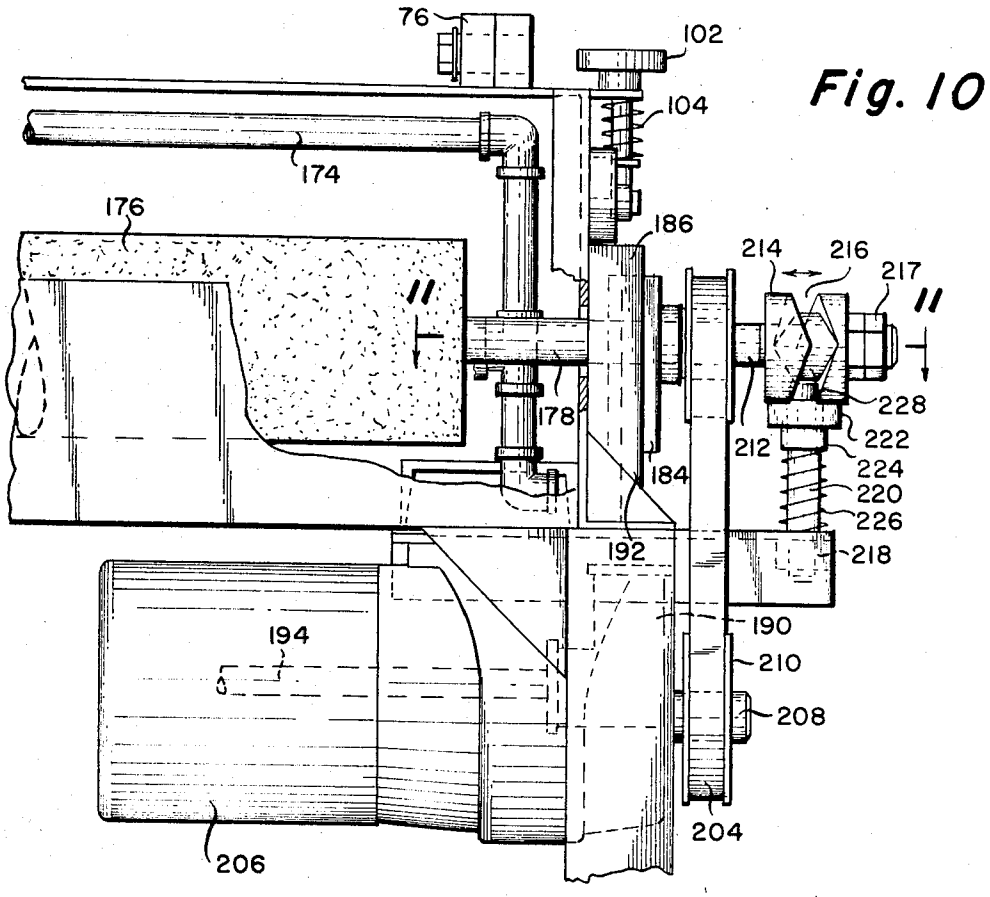

Fig. 10

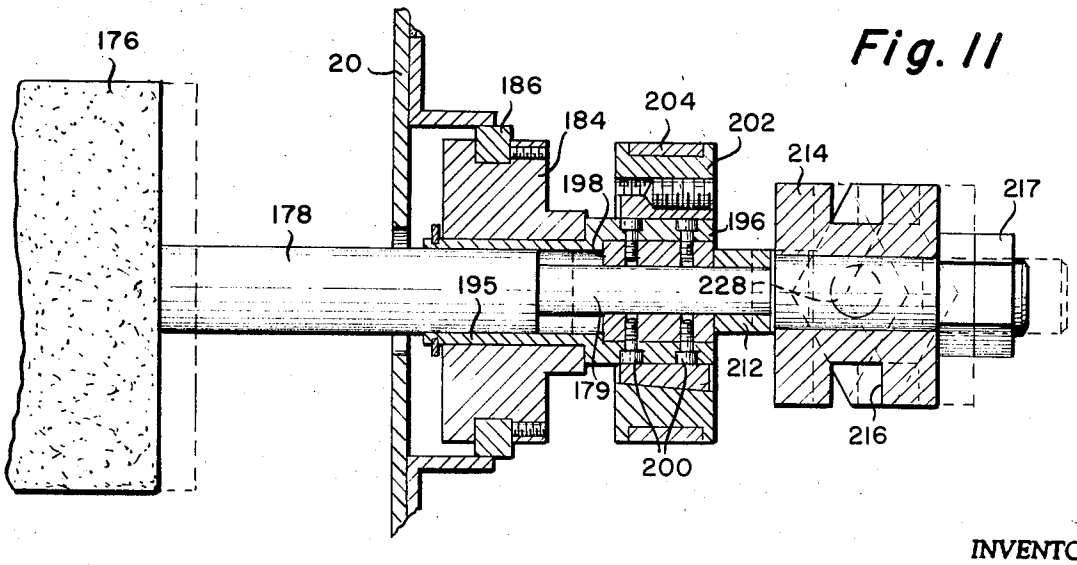

Fig. 11

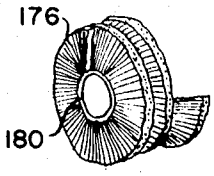

Fig. 12

INVENTOR
Edward A. Casson, Jr.

BY Schlesinger, Ackright & Garvey

ATTORNEYS

AUTOMATIC LITHOGRAPHIC PLATE DEVELOPING MACHINE

BACKGROUND OF THE INVENTION

Diazo sensitized lithographic plates which have been exposed through either a negative or positive film have heretofore been developed by pouring developing solution on the plate and "working up" the image and non-image areas manually by rubbing with a sponge. This is followed by washing the plate and applying a gumming solution to the exposed surface by hand. The development of plates in this manner is a tedious and time-consuming operation requiring the services of a skilled person.

Automatic developing machines for lithographic plates have recently appeared on the market. Such machines have been designed to permit developing an exposed lithographic plate and "working up" the image and the non-image areas thereof automatically by mechanical means so as to no longer require the services of a skilled person in processing the plates. Known automatic developing machines are provided with means feeding an exposed lithographic plate through an enclosure, generally by way of a conveyor belt supporting the plate. A developing solution is sprayed on the exposed surface of the plate and "working up" of the image and non-image areas is errected by means of a plurality of rotating cylindrical sponges having substantially vertical axes of rotation. The sponges are lowered by hand from a position out of contact with the exposed face of plate to a position in contact with the exposed face. The sponges, generally three to nine in number, are adapted to rub the exposed face of the plate. If any corner of the plate is not perfectly flat, one of the rotating sponges can easily catch the corner of the plate and severely bend the plate corner or edge to such degree that the plate may be caused to have its leading edge move upwards toward the mechanical drive of the sponges, thus jamming the machine and damaging the plate which must then be scrapped. Furthermore, the rotating sponges catching the corners and the edges of the plate are frequently ripped and torn, thus requiring replacement of the sponges. Such machines require repeated pressure adjustment of the sponges, manual raising and lowering of the sponge spindles for each plate developed, and frequent adjustment for changes in plate thickness and width size. The developing solution spray nozzles frequently clog and require repeated cleaning. Developing solution is thrown all over the interior of the machine, thus requiring frequent cleaning. Leakage of oil and other contaminant on the surface on the exposed face of the lithographic plate cause deterioration of the image.

Other prior art developing machines for lithographic plates are provided with a rotating cylindrical sponge having an axis of rotation parallel to the plane of the plate. The plate is fed through the machine by way of a conveyor belt with the exposed face of the plate disposed on top, developer is supplied to the plate surface by means of nozzles and the periphery of the rotating cylindrical sponge is engaged with the plate exposed face for "working up" the image and non-image areas. The developed image is often of poor quality and includes numerous streaks, some of which are caused by the separations between the sponge sections and others are caused by defects or worn spots in the

sponge sections always rubbing the plate surface at the same lateral location. The rotating sponge tends to catch the edge of the plate and the plate may be bent or deteriorated as a result of passing through the machine.

The present invention, by contrast, provides a developing machine for lithographic plates which is fully automatic in use, requires little care, and can be operated by relatively unskilled persons. The mechanical drive portion of the machines are located exteriorly to the machine such that no contamination by oil or other contaminants can cause deterioration of the developed image. The present invention permits to eliminate many of the disadvantages of prior art developing machines for lithographic plates by providing at all time positive holding of the exposed plate by means of resilient feed rolls of an appropriate hardness to positively feed the processed plate through the machine, exposed face down, by providing means for impregnating a cylindrical sponge with a developing solution and by rotating the sponge along an axis generally parallel to the surface of the plate, and by engaging the periphery of the sponge, while in rotation, with the exposed face of the plates so as to "work up" the image and non-image areas. The sponge is supported by a spindle or shaft axially oscillated such that the sponge periphery is laterally translated relatively to the plate surface so as to prevent the formation of streaks on the "worked up" image thereon. The direction of rotation of the cylindrical sponge is such as to prevent catching of the corners and of the leading edge of the plate, and the rotation of the sponge is automatically stopped before the trailing edge of the plate is translated to a position wherein the peripheral surface of the sponge, due to the direction of rotation thereof, could have a chance of catching said trailing edge of the plate.

SUMMARY OF THE INVENTION

The present invention therefore relates to an automatic developing machine for lithographic plates which include positive feeding means for translating an exposed lithographic plate through an enclosure, a cylindrical flexible rotating member such as a shaft covered with a sponge material peripherally engageable with the exposed face of the plate for rubbing such face for "working up" the image and non-image areas thereof, and with means for automatically rinsing and gumming the surface of the plate after an image has been "-worked up" thereon.

It is therefore an object of this invention to provide a machine for automatically, efficiently and rapidly developing lithographic plates.

Another object is to provide an automatic lithographic developing machine, wherein the developing solution is mechanically applied to the lithographic plate by a rotary rubbing member which rotates and oscillates simultaneously, the periphery of the rubbing member being impregnated with a developing solution and engaging the plate surface to "work up" the image on the latter.

A further object is to provide a machine of the character described, wherein the plate to be developed is carried by feed rollers to a developing station where the image on the plate is "worked up," followed by rinsing of the developing solution from the plate and an

application of a gumming solution to the exposed surface thereof, the developing operation being carried out in a continuous process within the machine, following which the completely developed plate is fed therefrom.

A still further object is to provide a developing machine capable of accomodating lithographic plates of various widths and which may be operated by an unskilled person.

Other objects will be manifest from the following description of the invention taken in conjunction with the accompanying drawings.

BRIEF DESCRIPTION OF THE DRAWINGS

FIG. 1 is a side elevation of an example of developing machine according to the present invention with parts omitted for clarity;

FIG. 2 is a front elevational view of the same;

FIG. 3 is a plan view of the example of machine of the present invention;

FIG. 4 is a front elevational view taken along the lines 4—4 of FIG. 1 and showing to advantage the control panel forming a part of the present invention;

FIG. 5 is a side elevational view taken along the lines 5—5 of FIG. 2, looking in the direction of the arrows;

FIG. 6 is a side elevational view taken along the line 6—6 of FIG. 2, looking in the direction of the arrows;

FIG. 7 is a sectional view taken along the line 7—7 of FIG. 3, looking in the direction of the arrows;

FIG. 8 is a sectional view taken along the line 8—8 of FIG. 5, looking in the direction of the arrows, and showing to advantage the upper feed roll drive;

FIG. 9 is a sectional view taken along the lines 9—9 of FIG. 5, looking in the direction of the arrows; showing to advantage the lower feed roll drive;

FIG. 10 is a sectional view taken along the line 10—10 of FIG. 6, looking in the direction of the arrows;

FIG. 11 is a sectional view taken along the line 11—11 of FIG. 10, looking in the direction of the arrows; and

FIG. 12 is a fragmentary perspective view of a mop sponge forming a part of the present invention.

DESCRIPTION OF THE PREFERRED EMBODIMENT

The illustrated example of an automatic lithographic plate developing machine according to the present invention includes a frame **20** supported by legs **22**, a platform **24** being positioned between the legs near the lower extremity thereof. A control panel **26** is mounted on support means **28** attached to frame **20**.

As shown to advantage in FIG. **9**, there is rotatable mounted in a horizontal plane within frame **20** a lower feed roll assembly comprising a plurality of feed rollers of suitable construction designated **30, 32, 36, 38, 40** and **42** having shaft portions **44, 46, 50, 52, 54** and **56** respectively the terminals of which are reduced and adjustably mounted in suitable bearing members exteriorly of the machine, in a manner to be hereinafter described.

Above the lower feed roll assembly is an upper feed roll assembly (See FIG. **8**) comprising rollers **58, 60, 62** and **64** having shaft portions **66, 68, 70** and **72** which are adjustably mounted in bearings extending beyond side walls of a sub-frame **74**, which is hingedly connected to frame **20**, as indicated at **76**.

Rearwardly of rollers **66, 68, 70** and **72** are additional rollers **78, 80** and **82** having shaft portions **84, 86** and **88** which are rotatably supported in bearings exteriorly of the walls of frame **20**. The upper feed roll assembly lies in a substantially horizontal plane above the lower feed rolls, the lithographic plate to be developed being fed exposed face down between the upper and lower feed roll assemblies to conduct the same through the machine.

In order to effect adjustment of the pressure on the upper feed rollers to effect optimum force on the lithographic plate, each of the upper feed rollers is floatingly mounted by means of bearings **90** through which each terminal of the roller shaft extends, one end of each bearing being pivotally mounted to the bearing side wall of the frame or sub-frame by means of a pin **92**. A second pin **94** is diametrically opposed to pin **92** and is rotatably positioned in a loop portion **96** of a swing bolt **98**. Bolt **98** is threadedly engaged through a stationary plate **100** for effecting longitudinal movement of the bolt, and consequent vertical adjustment of the rollers about point **92** as a pivot point. Adjustment of swing bolt **98** is facilitated by a hand knob **102** and a tensioning spring **104** is located between plate **100** and a collar **106** carried by the bolt periphery.

In order to drive the upper and lower drive roll assemblies, there is provided a motor **108** having a drive shaft **110** on which is mounted a gear **112** for actuating a chain **114**. As shown in FIGS. **5** and **9**, chain **114** extends upwardly into engagement with an idler **116** and then engages a sprocket gear **118** connected to the terminal of shaft **50**. Chain **114** then extends rearwardly of the machine to a second sprocket **120** attached to the terminal of shaft **52** and then returns to sprocket **112**. Rotation of rollers **36** and **38** is thereby effected. Shaft **50** is provided with a second sprocket **112** on which is mounted a second sprocket chain **124** which extends downwardly and forwardly into engagement with an idler sprocket **126** and then upwardly into actuating engagement with a sprocket **128** connected to a terminal of shaft **46** for rotating roller **32**. A sprocket **130** is connected to and driven by sprocket **126** to which sprocket **130** is engaged and a sprocket chain **132** which extends upwardly and forwardly to a sprocket **134** is connected to a terminal of shaft **44**. This effects rotation of feed roller **30**. The rollers previously described are each made of, preferably, a steel shaft provided with a substantially thick sleeve-like cylindrical hollow portion made of a rubber or rubber-like material. The rubber or rubber-like material has an appropriate resiliency, neither too hard nor too soft, so as to provide positive drive of the lithographic plate through the different stations of the machine and strong support and holding of the plate at each station, while preventing marring of the plate surfaces sandwiched between two opposed rollers. Preferably, the feed rollers have a sleeve-like cylindrical covering made of a material such as Buma-N or PVC rubber of a durometer comprised between 30 and 35.

A terminal of shaft **44** is provided with a sprocket gear **136** which is in meshing engagement with a sprocket gear **138** attached to a terminal of shaft **66** of the upper feed roll assembly for driving roller **58**. A sprocket **140**, to which is engaged a sprocket chain **142**, extends to a sprocket **144** on shaft **68** for driving roller **60**. A second sprocket **148** on shaft **68** is pro-

vided with a sprocket chain **150** which extends to actuating engagement with a sprocket **152** connected to the terminal of shaft **72** for driving roller **64**. A second sprocket **154** on shaft **72** is provided with a sprocket chain **156** in engagement with a sprocket **158** on shaft **70** for rotating roller **62**.

As indicated above, sprocket chain **114** is in driving engagement with sprocket **120** attached to terminal **52** of feed roller **38** to actuate the latter. A second sprocket **160** connected to shaft **52** is connected by a sprocket chain **162** to a sprocket **164** on shaft **54** of roller **40**, to rotate the latter. Shaft **54** is further provided with another sprocket **166** engageable with a sprocket chain **168** which extends into driving engagement with a sprocket **170** attached to shaft **56** for rotating roller **42**.

By means of the above construction, it will be seen that all of the rollers of the lower feed roll assembly are driven and the rollers attached to the sub-frame of the upper feed roll assembly are also driven, thereby providing positive rotary forces for conveying lithographic plates through the machine.

It is a salient feature of the present invention to provide a developing assembly which is located between lower feed rolls **32** and **36**. As shown in FIG. **7**, lower feed rollers **30** and **32** and upper feed rollers **58** and **60** comprise a feed station for directing lithographic plates, exposed face down, internally of the machine. Beneath these rollers there is provided a pan **172** extending transversely of the machine for collecting waste fluids and directing them to a main drain **174** which extends beneath and rearwardly of frame **20**.

Adjacent the feed station is a developing station which, in addition to lower roll **36** and upper roll **62** and **64** includes a rotating and oscillating rubbing member **176** having a central shaft **178** which is rotably mounted at both ends thereof externally of the side walls of the machine. Developing member **176** has an axis of rotation substantially parallel to the lithographic plate may be of any desired absorbent material capable of applying a frictional force on the plate, such as a mop sponge made of cellulose fibers, **179** wound on a core **180** as indicated in FIG. **12**.

Referring to FIG. **7**, the developing station further includes, in the example of the invention herein illustrated a pan **181** for the developing solution which extends forwardly and upwardly adjacent the periphery of member **176**, and terminates adjacent roller **32**. A drain **182** in the bottom of pan **181** is in communication with main drain **174**, for draining developing solution from the pan when desired. Alternately, if so desired, the pan **182** may be used only as a drip pan for recovering developing member **176** when rotating. It has been found that a small amount of developing solution is actually required and all that is necessary is, from time to time, to impregnate the cellulose fiber sponge material of the rotating member **176** with a small amount of developing solution squirted or sprayed thereon. One such impregnation with developing solution of the rotating member **176** is, for all practical purpose, sufficient for processing a substantial number of lithographic plates in succession. Additionally, the structure of the machine may be modified by providing a spray ramp, not shown, provided with a plurality of non-clogging spray nozzles for, from time to time, impregnating the developing member **176** with an appropriate developing solution.

In order to effect vertical adjustment of member **176**, each terminal of shaft **178** is journalled in a sliding block **184** which is mounted between guide rails **186**. Vertical adjustment of block **184** and member **176** is effected by a hand wheel **188** which is connected to a gear box **190**. This effects longitudinal movement of a shaft **192** engaged with a bushing **193** of guide block **184**, for producing vertical movement thereof in either direction.

In order to produce simultaneous vertical movement of both guide blocks, hand wheel **188** is connected to a shaft **194** extending transversely beneath frame **20** for operative engagement with shaft **192** on the opposite side of the machine from hand wheel **188**.

It will be noted from FIGS. **10** and **11** that at the side of the machine remote from hand wheel **188**, guide block **184** is provided with a cylindrical sleeve bearing **195** through which shaft **178** passes, the sleeve bearing permitting longitudinal as well as rotational movement of the shaft therein. Bearing **195** is extended and enlarged at **196** and is provided with an insert **198**, which is secured to sleeve bearing **196** by suitable means **200**. At the locus of insert **198**, shaft **178** is reduced, as indicated at **179**, which reduced portion is fixed to insert **198**. A drive pulley **202** having a drive belt **204** is fixed to sleeve portion **196** and insert **198** for effecting rotational movement, of shaft **178**. Belt **204** is energized by motor **206** having a drive shaft **208**, on which is mounted a pulley **210** in actuating engagement with drive belt **204**.

In spaced relationship to pulley **202**, and separated therefrom by a spacer sleeve **212**, is an oscillating unit comprising a track cam **214** fixedly mounted on the terminal of shaft **178**, which track cam is of generally cylindrical shape. The periphery of track cam **214** is provided with a guide way **216** which forms an angular annulus in the track cam periphery. Terminal bearings are indicated at **217**.

Beneath track cam **214**, frame **20** is extended as indicated at **218**, (See FIGS. **6** and **10**), on which extensions are mounted a pair of spaced vertical guide pins **220**, the upper portions of which are connected by a transverse guide block **222** subjacent guide pins **220**. At the locus of guide pins **220** are stops **224**. Convolute springs **226** extend between stops **224** and extensions **218**.

Intermediate its length, guide block **222** is provided with an upwardly extending cam follower **228** adapted for riding in guide way **216** of track cam **214**. Therefore, upon rotation of track cam **214**, a resultant oscillating movement of the cam, shaft **178** and member **178** occurs by virtue of the extension of guide way **116** from one side of the cam to the other and back again, to apply a multi-directional rubbing force i.e. rotary and oscillating, on the plate to be developed such as to prevent the formation of streaks on the surface of the plate.

Referring now to FIG. **7**, after a plate passes the developing station, it is fed to a rinsing station comprising opposed rollers **38**, **78** and rollers **40**, **80**. Between the opposed rollers is a vertical water pipe **230** to which are connected an upper spray pipe **232** for directing a rinsing spray into the top surface of the plate, and a

lower transverse pipe **234** for directing spray upwardly against the lower surface of the plate. Upper spray pipe **232** is provided with an arcuate spray shield **235**. A pan **236** is mounted on the frame below the rollers into which the rinse water gravitates and is carried away by a drain **238** to main drain **174**. Splash baffles **240** and **242** are mounted on the top of frame **20** for retaining the water within the rinse station.

Beyond the rinsing station, there is provided a gumming section which includes opposed rollers **42** and **82**, the former being located within a trough **244** in which is placed a gumming solution for application to the developed surface of the plate. It will be apparent that as roller **42** rotates within the trough it picks up the gumming solution and uniformly applies it to the face of the lithographic plate which it contacts prior to emission of the developed plate from the machine. A waste pipe **246** and a valve **248** are provided for removing the gumming solution from the trough.

Operation of the machine of the present invention is controlled by an operator who operates control panel **24**, which control panel includes a start button **250** which actuates motors **108** and **206**. A feed reverse button **252** is provided for use anytime it is desired to reverse the movement of the lithographic plate within the machine. A stop button **254** halts the machine operation.

In addition to the above, there is provision in the machine of the present invention for controlling the operation of development member **176** by means of a dial **256** which may be turned to the manual position for effecting actuation of the member as desired, or the dial may be moved to the automatic position.

When in the automatic position, operation of developing member **176** is controlled by elements **258** and **260** forming an "electric eye" assembly including a photocell and an incandescent lamp which are in spaced, aligned position on either side of the path of movement of the lithographic plate. As the plate passes between element **258** and **260**, the photocell assembly actuates motor **206** to effect rotation of member **176**. After a time delay to permit the lithographic plate to pass beyond member **176**, motor **206** is deactivated to stop member **176**. This positively prevents the plate from wrapping itself around member **176**. In this manner, member **176** is rotated, either manually or automatically, only when the lithographic plate is passing through the developing station of the machine.

OPERATION

In the use of the machine of the present invention, knobs **102** may be adjusted if necessary to effect vertical movement of the upper feed rollers until the proper pressure is exerted on the lower feed rollers to effect optimum movement of the lithographic plates through the machine.

The lithographic plate is fed into the machine between rollers **90** and **92**, exposed face down, following which it is fed between elements **258** and **260** of the photoelectric cell assembly to actuate rubbing member **176**, which then rotates and oscillates transversely while at the same time picking up developing solution as it rotates through the trough of pan **181**. As the lithographic plate proceeds between rubbing member **176** and roller **62**, the developing solution is uniformly applied to the entire surface thereof and uniform pressure is applied to the plate surface to "work up" the image over the entire surface area of the plate.

The plate is then fed between rolls **36** and **64** to complete the developing phase of the operation following which it enters the rinsing station where, after passing between rollers **38** and **78**, it passes between upper and lower spray pipes **232** and **234** which spray a rinse water on the entire surface of both faces of the plate. The plate is next fed between rollers **40** and **80** into the gumming station where a gumming solution picked up by roller **42** as it passes through trough **244**, is applied uniformly to the lower surface of the plate. After this, the plate is fed from the machine and ready for use.

With the machine of the present invention, no human intervention is necessary during any part of the operational cycle, other then to operate this machine. The developing solution is applied uniformly to each plate fed through the machine and the same multidirectional rotary and oscillating pressure is applied to the plate surface for "working up" the image on the plate. The machine may be of any desired width in order to accomodate a variety of plate sizes.

The machine of the present invention further obviates the tedious job of manually "working up" the image on the plate, rinsing it off then applying a gumming solution thereto, but also, because it is a continuous mechanical process, treats each plate in the same manner and efficiently and rapidly performs the developing operation.

What I claim is:

1. An automatic lithographic plate developing machine comprising:

a. a frame,
b. container means mounted on said frame,
c. conveying means for feeding through the container means a lithographic plate having an exposed face,
d. means for actuating said conveying means,
e. a cylindrical member mounted within said frame,
f. a peripheral portion of said cylindrical member lying in the path of movement of the lithographic plate for engaging the exposed face thereof,
g. means for applying a developing solution to the peripheral portion of said cylindrical member,
h. means for rotating said cylindrical member around an axis substantially parallel to the lithographic plate for applying and frictionally working the developing solution into the exposed face of the lithographic plate,
i. means for effecting axial oscillation of said cylindrical member whereby multi-directional movement of said cylindrical member is effective to "-work up" an image on the plate, and
j. means for applying a gumming solution to the developed surface of the plate,
k. said means for applying the gumming solution comprising a trough mounted within said frame,
l. a cylindrical member rotatably mounted on said frame,
m. a portion of the cylindrical member periphery being within said trough and in contact with the gumming solution,

n. another portion of the cylindrical member periphery lying in the path of movement of the lithographic plate for applying a gumming solution coating to the lithographic plate surface; and

o. power means for rotating said gumming solution cylindrical member to progressively apply gumming solution to different peripheral portions thereof.

2. An automatic lithographic plate developing machine comprising:

a. a frame,

b. container means mounted on said frame,

c. conveying means for feeding through the container means a lithographic plate having an exposed face,

d. said conveying means including a series of rollers comprising a lower feed drive,

e. a series of rollers comprising an upper feed drive,

f. said upper feed drive rollers being above, and in opposed relation to, the lower feed drive rollers,

g. means for vertically adjusting rollers of said upper feed drive,

h. said means for vertically adjusting the rollers of said upper feed drive comprising bearings for said cylindrical member pivotally connected at one side to said frame,

i. a swing bolt threadedly engaged with said frame above each bearing,

j. the lower terminal of said swing bolt being engaged with the opposite side of each of said bearings about the pivotal connection to said frame, for effecting vertical movement of said bearings and the rollers extending therebetween,

k. means for actuating said conveying means,

l. a cylindrical member mounted within said frame,

m. a peripheral portion of said cylindrical member lying in the path of movement of the lithographic plate for engaging the exposed face thereof,

n. means for applying a developing solution to the peripheral portion of said cylindrical member,

o. means for rotating said cylindrical member around an axis substantially parallel to the lithographic plate for applying and frictionally working the developing solution into the exposed face of the lithographic plate, and

p. means for effecting axial oscillation of said cylindrical member whereby multi-directional movement of said cylindrical is effected to "work up" an image on the plate.

* * * * *