United States Patent

Mosher et al.

[15] **3,653,411**

[45] **Apr. 4, 1972**

[54] **CABLE HARNESS ASSEMBLY BOARD AND METHOD OF MAKING THE SAME**

[72] Inventors: **Frank Howard Mosher**, West Palm Beach; **Earle Gifford Jenney**, Lake Worth, both of Fla.

[73] Assignee: **RCA Corporation**

[22] Filed: **Feb. 11, 1970**

[21] Appl. No.: **10,374**

[52] **U.S. Cl.** .....**140/92.1**, 29/203 J

[51] **Int. Cl.** **B21f 21/00**

[58] **Field of Search** .....140/92.1; 269/289, 305, 311, 269/319; 248/DIG. 3; 211/60; 29/203 B, 203 J

[56] **References Cited**

UNITED STATES PATENTS

3,346,020	10/1967	Geisinger	140/92.1
2,676,710	4/1954	Williamson	211/60
2,533,541	12/1950	Warring	211/60
3,091,423	5/1963	Butterworth	248/DIG. 3

Primary Examiner—Lowell A. Larson
Attorney—Edward J. Norton

[57] **ABSTRACT**

A harness cable assembly board includes one or more modular boards having pin receiving holes therein spaced in a predetermined grid pattern. Harness cable layouts for a plurality of different cable assembly configurations are detachably secured to the assembly board as are cable assembly guide pins which are removably inserted in the pin receiving holes. The same modular board may be used for a variety of different cable configurations and the layouts may be repetitively used with any of a plurality of modular boards.

4 Claims, 5 Drawing Figures

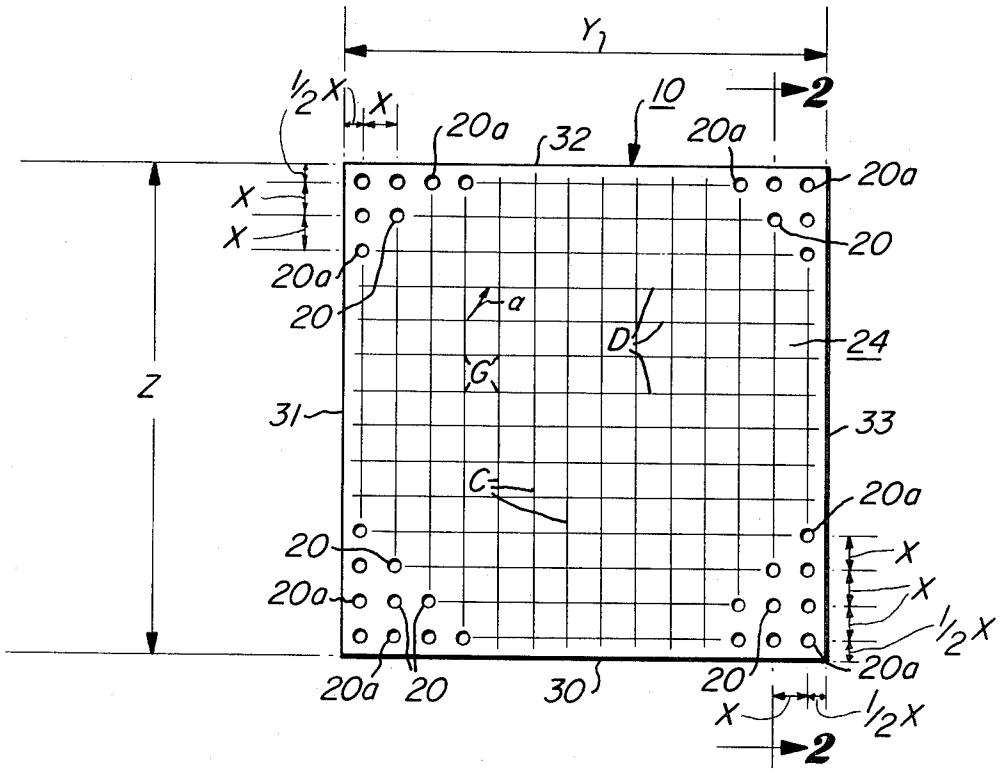

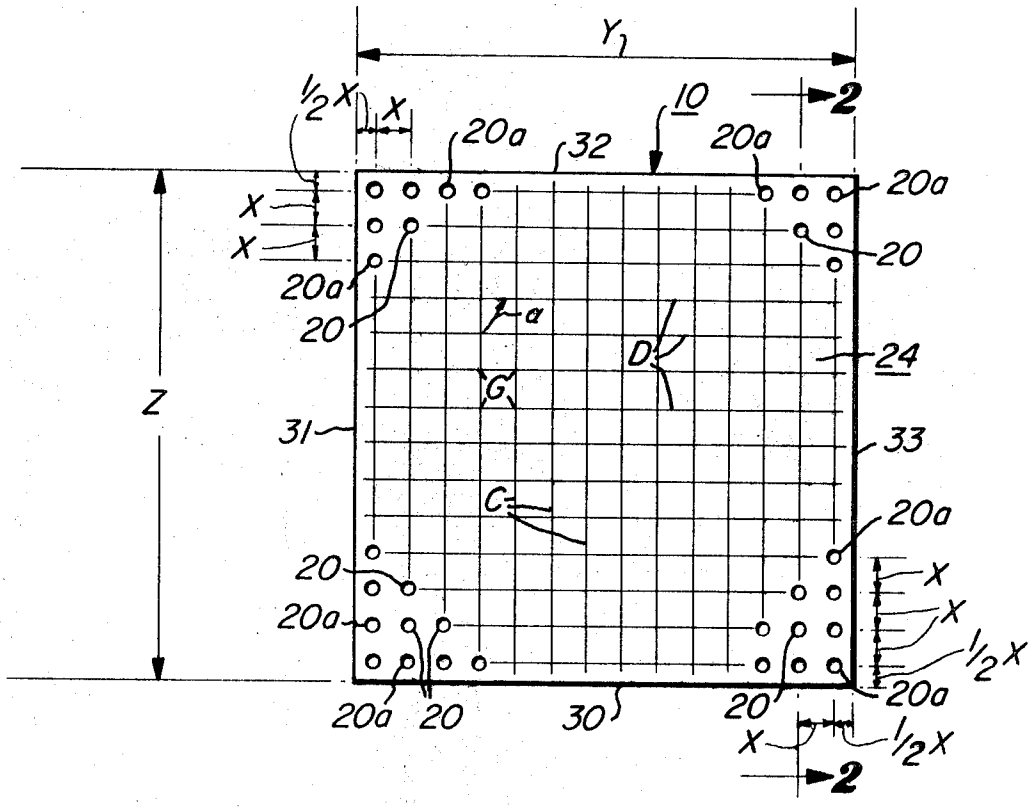

FIG. 1.

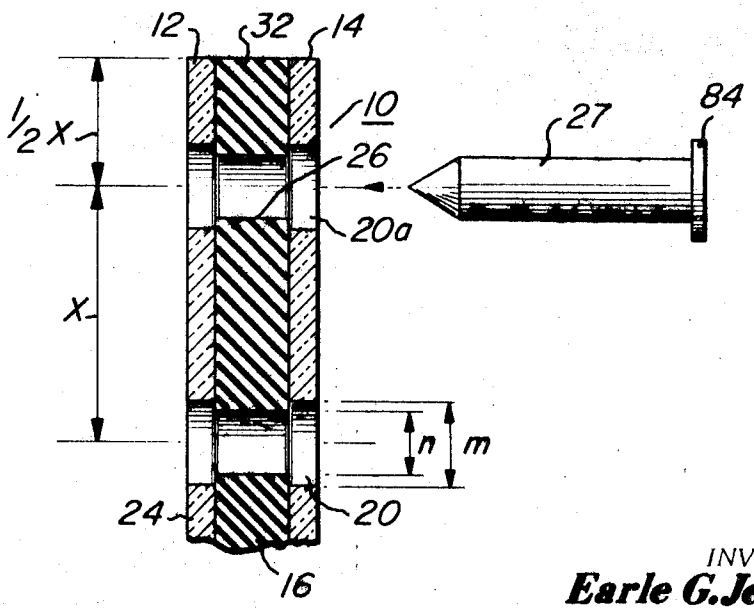

FIG. 2.

INVENTORS
Earle G. Jenney &
Frank H. Mosher
BY Edward J. Norton
ATTORNEY

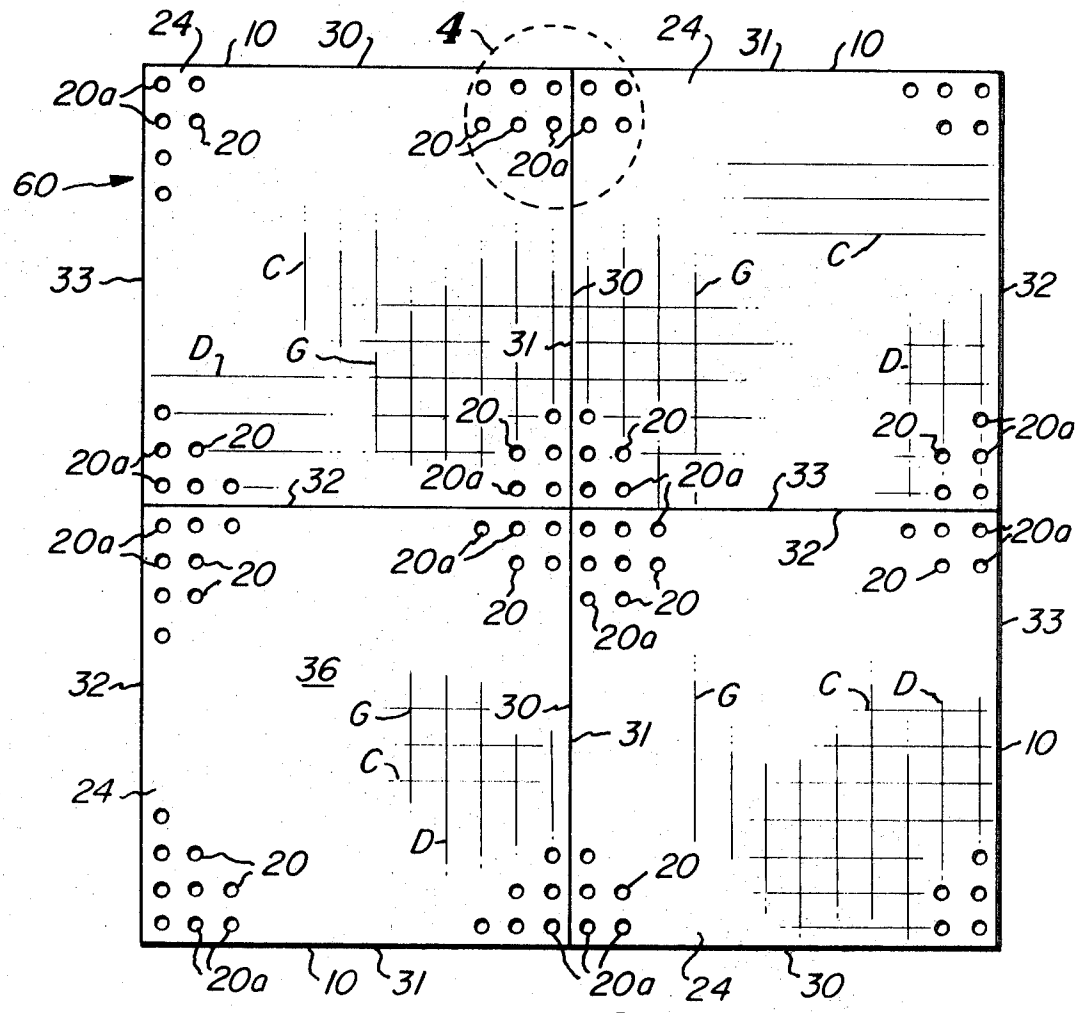

Fig. 3.

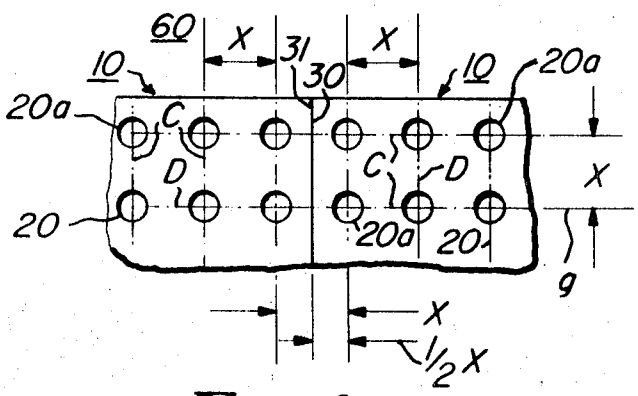

Fig. 4

INVENTOR.
Earle G. Jenney &
Frank H. Mosher
BY Edward J. Norton
ATTORNEY

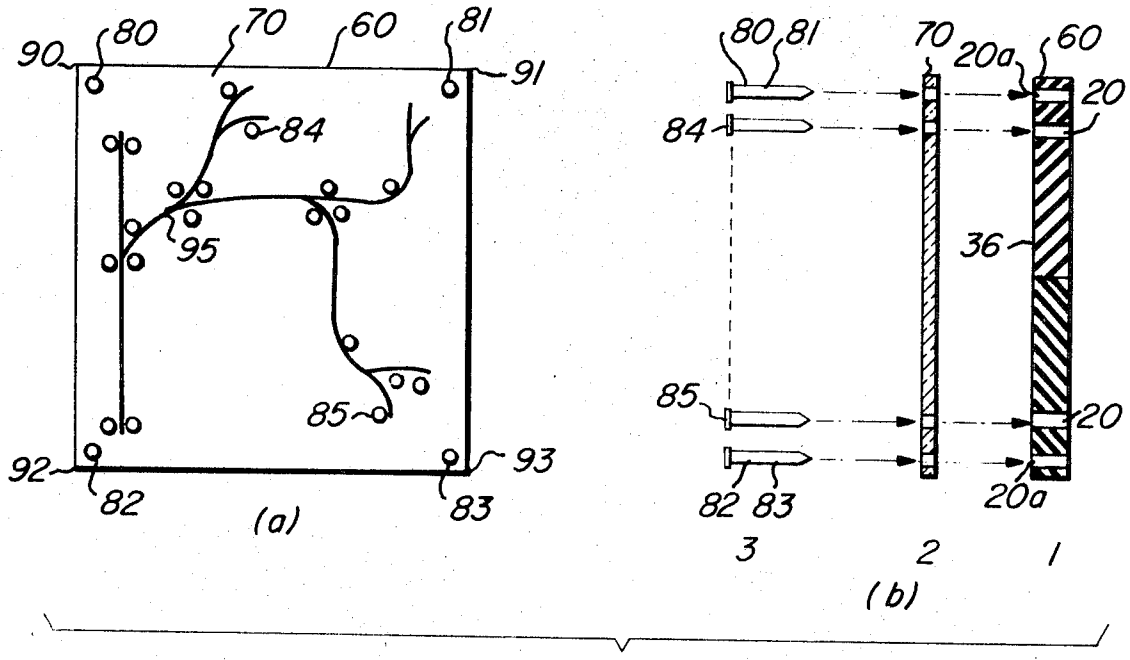

FIG. 5.

INVENTORS
Earle G. Jenney &
Frank H. Mosher
BY Edward J. Norton
ATTORNEY

CABLE HARNESS ASSEMBLY BOARD AND METHOD OF MAKING THE SAME

This invention relates to harness cable assembly boards and the method of making the same.

BACKGROUND OF THE INVENTION

Most electronic equipment manufacturers are required to fabricate large quantities of cable harness assemblies of different sizes, shapes, and configurations. The present practice for building these cables is to prepare a board made of plywood or other rigid material, paste or otherwise permanently affix to the board a blueprint or other layout of the harness configuration to be built over the board, and then permanently affix to the board and layout, assembly pins and other assembly hardware. An operator uses the assembly board to make many duplicate harness cable assemblies each of which is built up from a plurality of light gauge insulated conductors, each conductor being strung out according to the predetermined layout pattern or guide means affixed to the board.

However, these cable assemblies are usually built in random quantities or to manufacturing schedules in accordance with immediate production demands. These schedules may require many periods of use and disuse of the various harness boards. During the periods of disuse, the harness boards take up valuable storage space, since they may be several square feet in area and may be accumulated by the hundreds. In addition, the permanent nature of these assembly boards presents a waste of labor and materials in the sense that each different cable assembly requires its own corresponding assembly board even though each assembly board is made in a similar manner from similar materials. When the assembly boards are finally discarded, their permanent nature presents a high material loss.

It is an object of the present invention, therefore to provide a cable harness assembly board that takes up minimum storage space.

It is a further object to provide a cable harness assembly board that is readily reuseable regardless of the cable configuration that may be required to be built thereupon.

SUMMARY OF THE INVENTION

A wire harness assembly board in accordance with the present invention includes a plurality of substantially rigid sheets disposed in abutting edge to edge relationship to form a single planar sheet. Each rigid sheet has a plurality of pin receiving apertures spaced in a predetermined grid pattern on at least one face thereof. The edges of the rigid sheets are so spaced from the grid pattern and so formed that each of the rigid sheets forms a modular section of the single planar sheet which has one continuous grid pattern of the holes on at least one face thereof when the sections are disposed in the abutting edge relationship. Any edge of one section is capable of being disposed contiguous with any edge of any other section to form the single planar sheet.

In addition, the wire harness board includes a plurality of harness assembly guide pins, each pin being adapted to be closely received in a corresponding one of the holes selected in accordance with the assembly pattern provided by a given layout guide means. The pins are detachably inserted in selected ones of the holes in accordance with the predetermined pattern provided by the given layout.

DESCRIPTION OF THE DRAWINGS

FIG. **1** is a plan view of a modular harness board less the guide pins and guide means layout.

FIG. **2** is an enlarged partial cross section view of the board of FIG. **1** along lines **2—2**.

FIG. **3** is a plan view of a plurality of the boards of FIG. **1** forming a single planar harness board.

FIG. **4** is an enlarged portion of the assembly of FIG. **3** taken within the dotted circle **4**.

FIG. **5***a* is a plan view of a harness board including the assembly of FIG. **4** with a cable harness assembly guide layout and guide pins secured thereto.

FIG. **5***b* is a side view showing the assembly steps of the board of FIG. **5***a*.

DETAILED DESCRIPTION

Modular board **10** of FIG. **1** is a rectangular board or sheet preferably constructed of laminated sheets of material **12**, **14**, and **16** as shown in FIG. **2**. Front and back panels **12** and **14** are each respectively made of a rigid sheet of material, for example, one-sixteenth inch thick phenolic or other suitable material. Sandwiched between panels **12** and **14** and bonded thereto in a conventional manner is inner core **16** which is made of any resilient, compressible material such as a sheet of rubber of suitable thickness, for example, seven-sixteenths of an inch thick. The modular dimensions along the edges Y and Z may be of any size, but, for example, may be 2 feet each.

Formed in board **10** of FIG. **1** are a plurality of holes **20** and **20***a* each being substantially of the same diameter and preferably formed through layers **12** and **14**. As shown by board **10** of FIG. **1**, holes **20** and **20***a* form a grid pattern G on face **24** thereof. Grid pattern G comprises two groups of parallel lines C and D which cross each other at angle α, which may be of any size, but which is here shown as 90°. Each of holes **20** and **20***a* is spaced a grid spacing distance X center line to center line with the next adjacent hole, which distance is taken parallel to lines C and D. Holes **20***a* preferably are spaced from the respective next adjacent edge **30–33** of board **10** a distance ½ X parallel to lines C or D, as the case may be.

Distance X may be any size, but, preferably is that size which will result in any of holes **20** or **20***a* as the case may be falling within a desired tolerance from any predetermined randomly located point on face **24** of board **10**. That is, if face **24** were covered with a sheet of relatively thin opaque material such as paper or the like, and a preselected random point on face **24** was designated on the opaque material, those holes **20** or **20***a* next adjacent the random point would fall within a predetermined maximum dimension from the random point. Thus, if an operator were to take a nail and rub the point thereof over the opaque material adjacent the random point in the opaque material until a depression in the opaque material caused by holes **20** or **20***a* was located and the nail inserted through the opaque material into the respective hole, the location of the inserted nail would fall within a predetermined maximum distance from the random point. In practice, for example, the predetermined tolerance results when distance X is about 0.200 inches.

In FIG. **2**, holes **20** and **20***a* may be conveniently formed by drilling, preferably in only layers **12** and **14**. If drilled through core **16** also, then due to the resilient characteristic of inner core **16**, the hole formed therein will have a smaller diameter than the hole formed in outer panels **12** and **14**. In practice, only outer panels **12** and **14** need be drilled, as core **16** may be readily penetrated by a pin or nail in a manner to be described. However, as shown by FIG. **2** by way of example, hole **20** or **20***a* of core **16** may have a diameter *n* which is smaller than the diameter *m* of the outer panels **12** and **14**. Diameter *m* of holes **20** and **20***a* may be of any suitable size, for example, 0.07 inches. Thus, when a pin or nail **84** such as a collar nail 0.072 inches in diameter is inserted into holes **20** and **20***a*, resilient core **16** either by way of smaller diameter *n* or by the fact that the core is readily penetrated in the absence of a hole therethrough, retains the pin in the hole due to friction therebetween at surfaces **27** and **26** respectively. A pin so inserted is firmly, but detachably secured to board **10**.

Edges **30–33** of board **10** are normal to face **24** thereof. This normal relation permits a plurality of boards, such as board **10**, to be placed in end to end relation with one another such that edges **30–33** of each of the boards **20** so placed are juxtaposed with a respective corresponding edge **30–33** of the next adjacent board, forming a single planar board therewith.

FIG. 3 shows such a relationship. Note that any of edges **30–33** of one board **10** may be contiguous with any of edges **30–33** of another board **10**. Of course modular boards having lengths and widths of various sizes may be used rather than the same size as shown by FIG. 3. Means, not shown, support the boards in a vertical or other position for assemblying a cable harness therewith. In FIG. 3, four boards are shown forming a single planar board **60**. Any number of boards, fewer or greater than four could be employed as will be appreciated.

Grid G of each of the boards **10** forming board **60** of FIG. 3 together form a single continuous grid that extends over the entire area of face **36** of board **60** which includes each of faces **24** of boards **10**. In FIG. 4, which is an enlarged portion of board **60** taken within the dotted circle **4** of FIG. 3, it is seen that the spacing ½ X of the holes **20***a* adjacent edges **30** and **31** together form a grid spacing X. Grid spacing X remains the same regardless of which one edge is disposed adjacent any other edge of any other board. Thus, a single planar board having a predetermined grid spacing can include either a single modular board, such as board **10**, or any number of modular boards of the same or different dimensions Y and Z, each board so assembled having the identical grid spacing described.

Once having assembled planar board **60** of FIG. 3, which board may comprise any number of modular boards, as described above, a harness cable assembly layout **70** as shown by FIG. 5, is removeably attached to face **36** of board **60** of FIG. 3. Conventional means may be employed to removeably attach cable assembly guide means layout **70** to board **60**; however, means such as 0.072 diameter collar nails **80–83** of FIG. 5 are preferably used in each of holes **20***a* corresponding to corners **90–93** of board **60**. First, layout **70**, which may be an ordinary paper or other conventional drawing, is placed over board **60** and, secondly, nails or pins **80–83** of FIG. 5 are passed through puncturing the layout which may be paper or other thin flexible, readily pierced material. The corner nails or pins **80–83** then are secured in their corresponding holes **20***a* as described previously. Finally guide pins **84–85**, which are conventional harness assembly pins such as 0.072 diameter collar nails, as known in the art, are passed through piercing layout **70** and inserted in the selected ones of holes **20** and **20***a* in accordance with the particular harness configuration **95** of FIG. 5*a*. Pins **84–85** are diagramatically represented as circles in FIG. 5*a*. Upon completion of the assembly of a predetermined quantity of harness cables, the harness board assembly of FIGS. 5*a* and 5*b* may be readily dismantled so that boards **10** may be reassembled for use with other layouts similar to layout **70** but having different configurations **95**.

Pins **80–85** are detached from board **60** which at the same time detaches layout **70** from board **60**. The various modular boards **10** can then be rearranged to conform to a different layout guide means configuration. The procedure described above is thus repeated for each differently configured harness cable assembly.

The grid spacing 0.20 inches is a size such that guide means layout **70** need not have the location of the various guide pins **84–85** preidentified thereon nor need layout **70** permit holes **20–20***a* to be visible therethrough, as described above. Pins **84–85** may be assembled to board **60** within acceptable manufacturing tolerances without aligning layout pattern (harness configuration) **95** to holes **20–20***a*. Should a more accurate location be desired, however, pins **84–85** could be prelocated by preprinting on layout **70**, or otherwise identifying thereon the desired pin locations.

Thus, in the manner described, a great number of different harness configurations may be assembled with a relatively small quantity of modular boards **10**, which comprise the bulk of harness cable assembly boards. The layouts **70** which take up relatively much less space, being ordinary blueprints or the like, may conveniently be folded and stored for subsequent reuse.

What is claimed is:

1. An assembly board for the construction of a plurality of differently configured harness cable assemblies of the type including bundles of individual insulated electrical conductors built up from a predetermined pattern disposed on a corresponding guide means, said board comprising:

a plurality of substantially rigid sheets disposed in abutting edge to edge relationship to form a single planar sheet, each rigid sheet having a plurality of pin receiving holes spaced in a predetermined grid pattern on at least one face thereof, the edges of said rigid sheets being so spaced from said grid pattern and being so formed such that each of said rigid sheets forms a modular section of said single planar sheet having one continuous grid pattern of said holes on at least one face thereof when said sections are disposed in said abutting edge to edge relation, any edge of one section being capable of being disposed contiguous with any edge of any other section to form said single planar sheet, and

a plurality of harness assembly guide pins, each a adapted to be closely received in a corresponding one of said holes selected in accordance with the assembly pattern provided by the corresponding separate guide means, said pins being detachably insertable in selected ones of said holes in accordance with said predetermined pattern.

2. The assembly board of claim **1** wherein each of said holes is spaced from the next adjacent hole along said grid pattern substantially the same distance to form a regular grid pattern including a plurality of parallel lines crossing a second plurality of parallel lines at an angle,

said edges being spaced from the next adjacent grid pattern along a line parallel to one of said plurality of lines a distance substantially one half of said same distance.

3. The method of making an assembly board for the construction of a plurality of differently configured harness cable assemblies of the type including bundles of individual insulated electrical conductors built up from a predetermined pattern, comprising the steps of:

removably securing a plurality of rigid sheets of material in contiguous edge to edge relation forming a planar assembly board including a plurality of pin receiving holes spaced in a regular grid pattern on at least one face of said planar board,

removably attaching a first harness cable guide means including a sheet of flexible material having a predetermined cable assembly pattern affixed thereon to the one face of said planar board, and

removably attaching a plurality of harness assembly guide pins to said planar board by passing said guide pins through said guide means into said holes selected in accordance with the assembly pattern provided by said guide means.

4. The method of claim **3** further including the steps of:

detaching said guide pins from said planar board,

detaching said guide means from said planar board,

rearranging said plurality of rigid sheets in contiguous edge to edge relation forming a rearranged planar assembly board including a plurality of pin receiving holes spaced according to said grid pattern on at least one face thereof,

removably attaching a second harness cable guide means including a sheet of flexible material having a predetermined cable assembly pattern affixed thereon to said rearranged planar assembly, and

removably attaching a plurality of harness assembly guide pins to said rearranged planar assembly by passing said guide pins through said guide means into said holes selected in accordance with the assembly pattern provided by said second guide means.

* * * * *