United States Patent

Freeman

[15] **3,650,026**

[45] **Mar. 21, 1972**

[54] **METHOD OF FORMING A CONTACT**

[72] Inventor: **Albert Leslie Freeman,** Harlow, England

[73] Assignee: **International Standard Electric Corp.,** New York, N.Y.

[22] Filed: **Aug. 1, 1969**

[21] Appl. No.: **846,710**

[30] **Foreign Application Priority Data**

Aug. 21, 1968 Great Britain.....39,925/68

[52] **U.S. Cl.**.....**29/630 C,** 10/27 E, 10/27 R, 29/160.6, 72/46, 72/47, 140/111, 219/103, 219/104, 219/107, 200/166

[51] **Int. Cl.**.....**H01r 9/00**

[58] **Field of Search**.....29/630 C, 103, 104, 107, 417, 29/160.6; 140/111; 72/47, 46; 10/27 E, 27 R

[56] **References Cited**

UNITED STATES PATENTS

1,081,451	12/1913	Kerk	29/160.6
3,485,994	12/1969	Swajger et al.	219/103
2,739,370	3/1956	Cooney	29/630 C
3,191,272	6/1965	Gwyn, Jr.	29/630 C

Primary Examiner—John F. Campbell
Assistant Examiner—Robert W. Church
Attorney—C. Cornell Remsen, Jr., Walter J. Baum, Percy P. Lantzy, J. Warren Whitesel, Delbert P. Warner and James B. Raden

[57] **ABSTRACT**

Electrical contacts are produced by welding the ends of coated contact wires to strips of springs metal. The welded end of each of the wires is severed from the remainder of the wire leaving a chisel-ended stud welded to the spring strip. This stud is then subjected to a die forming operation to produce a shaped contact.

4 Claims, 2 Drawing Figures

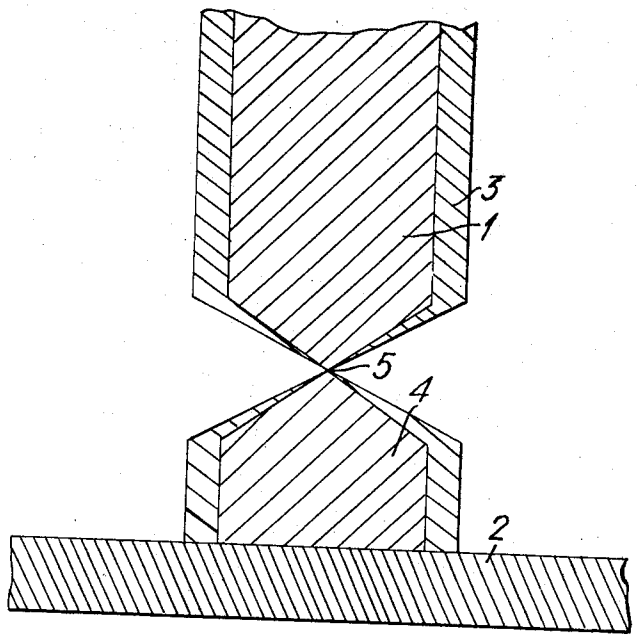

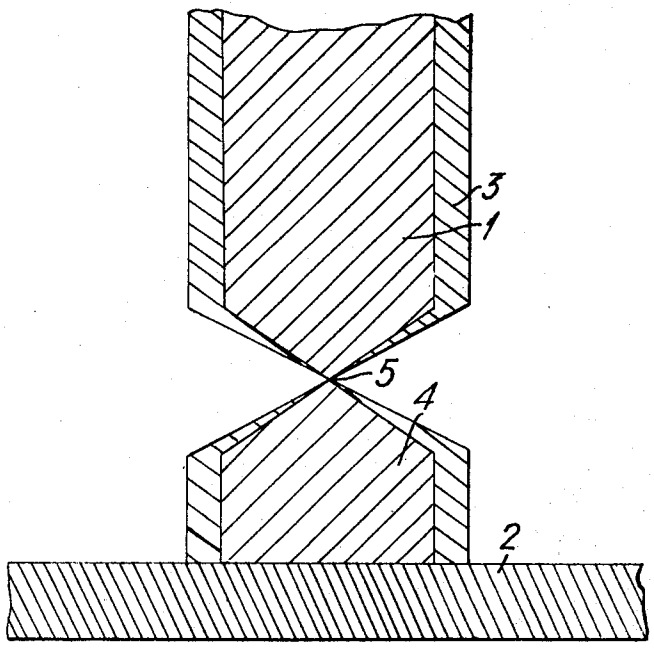

Fig. 1.

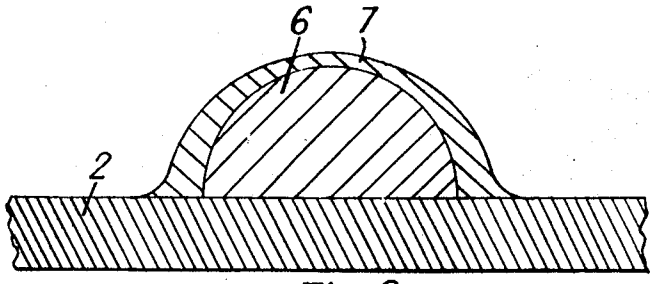

Fig. 2.

Inventor
A. L. FREEMAN
By James B. Raden
Attorney

METHOD OF FORMING A CONTACT

This invention relates to electrical contacts for example for relays, and to a method of manufacturing such contacts.

It is common to manufacture small relay contacts by affixing to a strip of spring metal a silver contact. This is usually done by piercing a hole in the spring and inserting a small silver rivet, the head of which forms the relay contact. Such contacts if kept in store for any length of time tend to tarnish quickly. One method of preventing this is to protect the contact with a thin coating of gold.

According to this invention a method of manufacturing an electrical contact includes the steps of welding the end of a coated contact wire to a strip of spring metal, severing the welded end of the wire from the remainder of the wire by means of a pair of pinching cutters to leave a chisel-ended stud welded to the spring strip and shaping the stud by impact of a shaped die to produce a shaped contact. Preferably the wire is gold coated silver wire, and the die is dome-shaped.

It has been found that contacts made by the above method have a satisfactory gold coating by virtue of the fact that the pinching cutters tend to draw the gold coating on the wire across the cut surface and this drawn gold film remains even after the die-shaping operation.

The invention therefore provides a contact consisting of a shaped contact body welded to a strip of spring metal, the contact body being covered with a protective film.

The above mentioned and other features of the invention and the manner of attaining them will become more apparent and the invention itself will be better understood by reference to the following description of an embodiment of the invention, taken in conjunction with the accompanying drawings, in which:

FIG. 1 is a cross section illustrating the cutting operation in the manufacture of a relay contact, and,

FIG. 2 is a cross section illustrating the finished relay contact.

In the manufacture of a relay contact according to the invention a length of silver wire **1** (FIG. 1) is butt welded by a resistance or capacitor welding operation to a strip of spring metal **2**. The wire **1** is gold coated, the gold coating **3** being continuous. In the welding operation the silver is welded directly to the spring **2**, there is no gold between the two. The gold coating **3** is only in contact with the spring **2** around the circumference of the weld. After the wire has been welded to the spring a pair of pinching cutters (not shown) are used to

sever the welded end **4** of the wire from the supply length. The pinching action of the cutters not only leaves a chisel edged stud **4** welded to the spring, it also "draws" the gold coating from the edge of the cut wire towards the middle **5**, or "apex," of the cut.

When the wire has been cut the welded stud **4** is placed under a concave dome shaped die (not shown) and coined. The result is to cold work the chisel edged stud of FIG. **1** into a hemispherical contact **6** (FIG. **2**) still welded to the spring **2**. The punching operation also works the drawn gold coating **7** and leaves it as a hemispherical coating completely covering the contact **6**. In fact the flow of metal is such that on the apex of the contact the gold covering **7** is very thin whereas towards the base of the contact it remains thicker. However, since the only function of the gold is to prevent tarnishing the thinness of the coating is immaterial. In any case, after one or two electrical operations of the relay the gold film is destroyed; it is not designed to withstand normal operation of the contacts. The shape of the die can be other than hemispherical provided it is not shaped so that it can cause any significant rupturing of the protective coating.

It is to be understood that the foregoing description of specific examples of this invention is made by way of example only and is not to be considered as a limitation on its scope.

I claim:

1. A method of manufacturing an electrical contact having a thin protective covering of another metal on the contact surface, the method including the steps of welding the end of a contact wire coated with another metal to a strip of spring metal, severing the welded end of the wire from the remainder of the wire by forcing a pair of pinching cutters through the cross section thereof and contemporaneously drawing a covering of said another metal across the severed area during the severing process to leave a covered chisel-ended stud welded to the spring strip, and shaping the said covered chisel-ended stud by impacting same with a shaped die to form a contact having a covering of the said other metal over a contoured surface.

2. A method according to claim **1** wherein the coated contact wire is gold coated silver wire and the covering over the contoured surface is a covering of gold.

3. A method according to claim **1** in which the wire is welded to the spring strip by resistance welding.

4. A method according to claim **1** in which the die is dome-shaped.

* * * * *