United States Patent

Vorbach et al.

[15] **3,643,596**

[45] **Feb. 22, 1972**

[54] **HIGH-SPEED IN-LINE PRINTER**

[72] Inventors: **Gunther Vorbach,** Schwindegg; **Harald Koch,** Baierbrunn, both of Germany

[73] Assignee: **Siemens Aktiengesellschaft,** Berlin and Munich, Germany

[22] Filed: **Nov. 26, 1969**

[21] Appl. No.: **880,281**

[30] **Foreign Application Priority Data**

Dec. 10, 1968 Germany .....P 18 13 769.4

[52] **U.S. Cl.** .....**101/93 C,** 197/18, 197/48, 197/49

[51] **Int. Cl.** **B41j 7/06**

[58] **Field of Search** .....197/48, 49, 18; 101/93 C

[56] **References Cited**

UNITED STATES PATENTS

3,292,531	12/1966	Mutz	197/49 X
2,928,896	3/1960	Dirks	101/93 C X
3,472,352	10/1969	Kondur, Jr.	197/49
3,465,670	9/1969	Belson et al.	101/93 C
2,625,100	1/1953	Williams et al.	197/49 X
3,101,233	8/1963	McNaney	101/93 C X
2,548,720	4/1951	Gretener	101/93 C X
3,151,547	10/1964	Hornaver et al.	197/49 X
2,774,816	12/1956	Yost	197/49 X
3,309,989	3/1967	Solheim et al.	101/93 C
3,397,766	8/1968	Spalinger et al.	101/93 C X
3,326,346	6/1967	Sasaki	101/93 C X

Primary Examiner—Robert E. Pulfrey
Assistant Examiner—R. T. Rader
Attorney—Hill, Sherman, Meroni, Gross & Simpson

[57] **ABSTRACT**

Apparatus for making flying impressions of type symbols by the use of two or more side-by-side impact wheels extending in planes parallel of the plane of a disklike-type carrier and spaced laterally therefrom. A rocking lever pivoted intermediate its ends forms the printing hammer and is actuated by coupling members independently engaged between the teeth of the rotating impact wheels. The impact wheels have teeth spaced one-half pitch apart, where two wheels are used. The teeth correspond to the characters on the type carrier, and each impact wheel has one-half the number of teeth as the number of characters on the type carrier. The impact wheels are coupled to the type carrier to rotate therewith. The coupling members are actuated by electromagnets energized by an energy storer for the printing energy, and are selectively engaged between the teeth of the thrust wheels by the electromagnets, to actuate the rocking lever to effect the high-speed making of flying impressions of selected-type symbols. In a modified form the rocking lever moves between two stops and engages a vertically guided hammer, and moves the hammer radially to strike a recording medium against the type carrier and returns the hammer on its return stroke.

10 Claims, 4 Drawing Figures

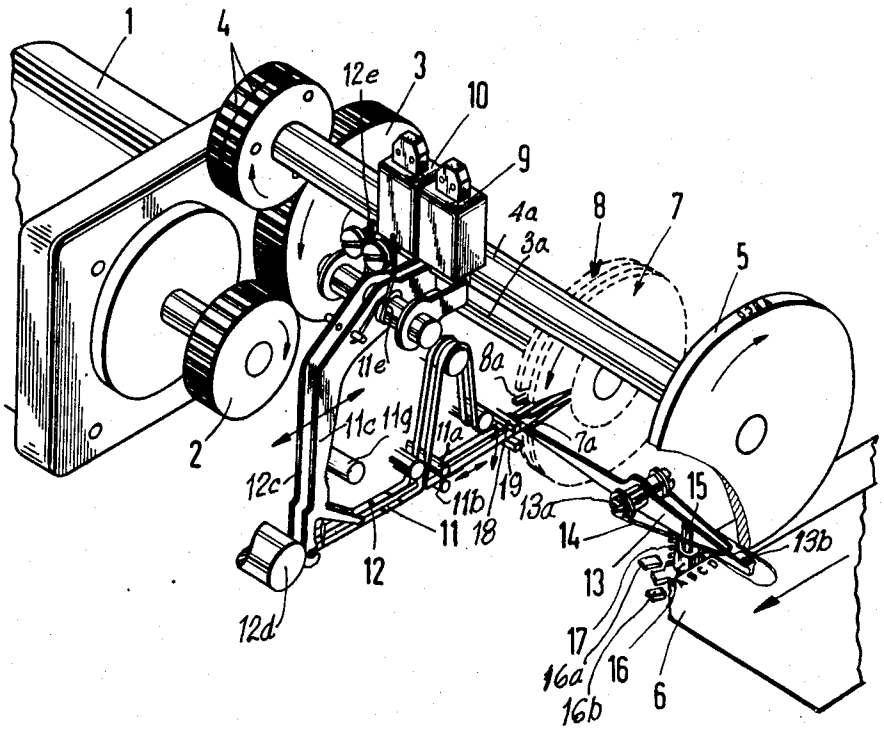

Fig.1

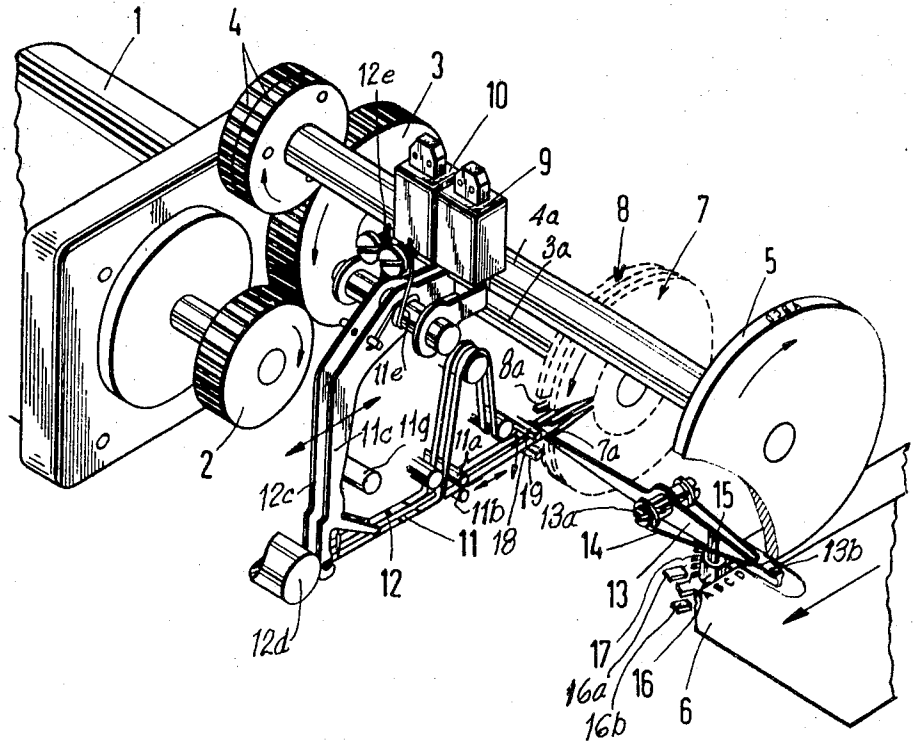

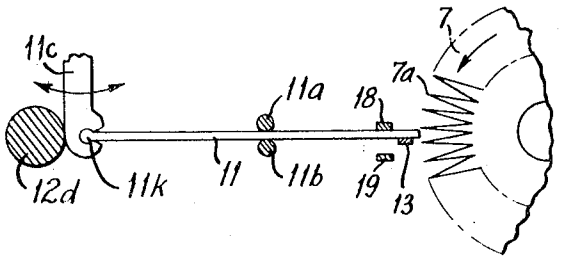

Fig.1A

INVENTORS
Gunther Vorbach
Harald Koch

BY Hill, Sherman, Meroni, Gross & Simpson ATTYS.

Fig. 2

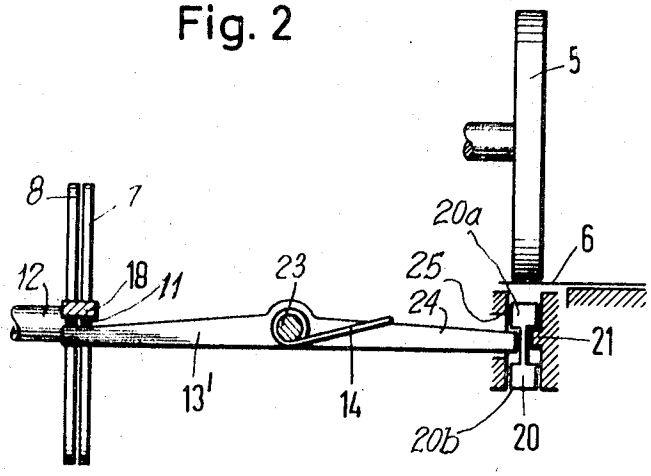

Fig. 3

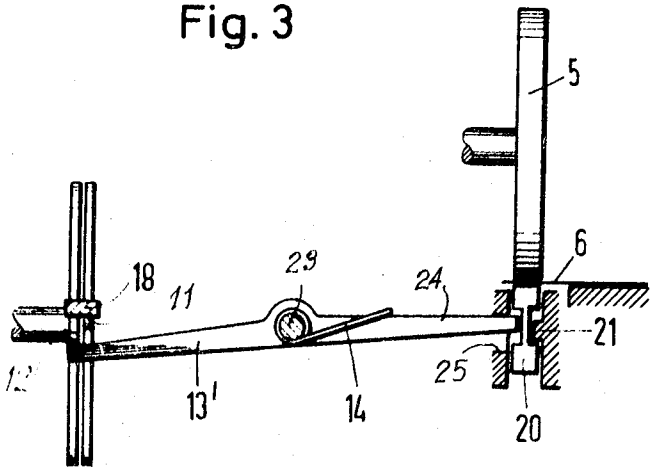

INVENTORS
Gunther Vorbach
Harald Koch

BY Hill, Sherman, Meroni, Gross & Simpson ATTYS.

HIGH-SPEED IN-LINE PRINTER

BACKGROUND OF THE INVENTION

High-speed printers for the making of flying impressions of type symbols using impact wheels acting selectively on a hammer through coupling members have heretofore been in use. Such printers are particularly suited for use at very high printing speeds and the high printing speeds are attained from the fact that a whole line of printing symbols are printed in a single printing cycle and storage devices are employed, particularly suited for this purpose, and the stored printing energy is utilized so the instant the type symbol moves past the printing point the printing hammer is actuated.

In the high-speed flying impression types of printing apparatus heretofore in use, a disklike type carrier has been used having symbols on its periphery and has been rotatably driven past a printing point. An impact wheel structure rotating with the type carrier and in a plane common to the plane of the type carrier actuates the printing hammer through a coupling member engageable between the teeth of the impact wheel and operated thereby, to move the printing hammer with an impact motion, to effect a printing operation as the symbols have passed a printing point. With such an arrangement, a large number of similar impact wheels and type carriers must be provided and individual printing hammers are selectively engaged with the recording medium and type carrier through operation of the coupling elements, controlled in accordance with the symbols to be printed.

By the present invention, we utilize the impact wheel heretofore used for making linewise impressions in cooperation with a disklike type carrier which rotates at a constant speed about an axis parallel to the axis of rotation to the impact wheels, but arrange two impact wheels side by side in a plane parallel to and offset laterally from the plane of the type carrier to selectively operate a rocking lever to print one symbol after the other on the type carrier, onto the printing medium.

In this form of printing apparatus, the impact wheels are coupled to the type carrier and are driven in directions opposite to the direction of rotation of the type carrier and at speeds proportionate to the speed of rotation of the type carrier, to successively make the printing impressions in the required time interval. This apparatus also utilizes coupling members actuated by electromagnets energized in accordance with symbols to be printed as determined by the stored printing energy and selectively engaging the coupling members between the teeth of the impact wheels, to effect movement of the lever arm making the printing impression, as the coupling members are engaged between the teeth of the impact wheels in a preselected sequence determined by the stored information required to energize the electromagnets to effect printing of the printing symbols.

In a preferred form of the invention, the lever arm moves between two stops and engages a vertically guided hammer, positively moving the hammer upwardly to strike the record medium against the peripheral surface of the type carrier, and positively returns the printing hammer on its return stroke.

This form of the invention also utilizes an energy storer for the printing energy enabling the drive elements to be reduced in size and achieving favorable conditions when the printing energy is available in a mechanical time raster in the form of an impact wheel structure, corresponding to the intervals of the type symbols flying past the printing point and at the instants printing is to take place.

The arrangement of the type carrier for rotation in one plane and of the impact wheel structure in a parallel plane to one side of the plane of the type carrier and rotating synchronously with the type carrier as well as the use of a rocking lever as the transmission means for the printing energy required at the printing point has the advantage that the type carrier and the member executing printing movement are the only elements required for printing, making it possible to use the printing device for printing recording members to be

punched, and also to use punching devices in addition to the printing elements.

Other advantages are that the masses of inertia of the printing hammer, which must be overcome to effect the printing operation are much lower when the printing hammer is in the form of a rocking lever than with conventional printing hammers.

A further advantage is that the rocking lever may be selectively actuated by one or more coupling members and all the coupling members may act on the rocking member with an equal effect, rather than eccentrically as in parallel-guided printing hammers. This reduces the frictional losses heretofore present with the prior art printing hammers.

A principal object of the present invention, therefore, is to provide an improved form of actuating mechanism for the printing hammer of a line printer, utilizing the principle of a rocking lever having an end registrable with a rotating disklike type carrier, and actuating the rocking lever by impact wheels rotatably driven in timed relation with respect to the type carrier, and offset laterally from the type carrier.

A further and more specific object of the invention is to simplify the actuator means for the hammer of a line printer, in which an impact wheel structure having teeth corresponding to the intervals of the type symbols flying past the printing point at the instants of printing, is utilized to actuate a rocking printing hammer.

Another object of the invention is to provide a printing mechanism particularly adapted for high-speed printers for in-line type printing, by the use of a disklike type carrier rotating at a constant speed, and impact wheels rotating in planes parallel to the plane of rotation of the type carrier and offset laterally from the plane of rotation of the type carrier, and imparting an impact force to a rocking lever through controllable coupling members transmitting the energy of the impact wheels to the rocking lever, to effect a printing impact at the free end of the rocking lever.

Another object of the invention is to provide an improved form of high-speed printing mechanism utilizing a rocking member for transmitting the printing energy at the printing point, thereby making it possible to effect printing and the use of punching devices in addition to the printing elements.

Still another object of the invention is to provide a simple and improved line printer in which the masses of printing energy are reduced over conventional printing mechanisms by employing a rocking member in place of the conventional printing hammer.

Still another object of the invention is to provide an improved form of printing apparatus utilizing a rocking member as a printing element and obviating the tendency of the rocking member to rebound at the termination of a printing operation by the use of a sliding weight cooperating with the rocking member, to reduce rebound thereof.

Still another object of the invention is to utilize a rocking lever to transmit the printing energy to a rectilinearly guided printing hammer, movable diametrically of a disklike type carrier and rapidly engaged with the recording medium to effect the impression of a symbol and returned by return movement of the rocking lever.

Other objects, features and advantages of the present invention will be readily apparent from the following description of certain preferred embodiments thereof, taken in conjunction with the accompanying drawings, although variations and modifications may be effected without departing from the spirit and scope of the novel concepts of the disclosure.

DESCRIPTION OF THE DRAWINGS

FIG. 1 is a diagrammatic perspective view of a printing apparatus constructed in accordance with the principles of the present invention.

FIG. 1*a* is an enlarged diagrammatical view illustrating a coupling member in side elevation in the process of being thrust between the teeth of an impact wheel.

FIG. 2 is a diagrammatic view illustrating a modification of the invention in which the printing hammer is at a rest position; and

FIG. 3 is a view similar to FIG. 2, but showing the printing hammer in an impact printing position.

DESCRIPTION OF PREFERRED EMBODIMENTS OF INVENTION

In FIG. 1 of the drawings, we have shown a motor 1 driving meshing gears 2, 3 and 4. The gear 4 has driving connection with a disklike type carrier 5 through a coaxial drive shaft 4*a*. The type carrier 5 has type symbols on its periphery, successively moved past a movable recording medium 6 to print selected type symbols on the recording medium as the recording medium moves rectilinearly beneath the type carrier in the direction of the arrow shown in FIG. 1.

Impact or thrust wheels 7 and 8 are keyed or otherwise secured to a shaft 3*a* parallel to the shaft 4*a* coaxial with and driven from the gear 3 of the meshing gears 2,3 and 4. These two impact wheels are driven to rotate in locked phase relation with the type carrier 5. The impact wheels 7 and 8 have teeth 7*a* and 8*a* arranged in staggered relation with respect to each other by one-half tooth pitch, to respectively operate coupling members 11 and 12 as moved between the teeth of said impact wheels, to effect rocking movement of a rocking lever 13. The rocking lever 13 in the form of the invention shown in FIG. 1 serves as a printing hammer and is pivoted intermediate its ends on a stationary pivot shaft 13*a*. As shown in FIG. 1, one end of the rocking lever 13 is in position beneath the coupling members 11 and 12, to be depressed thereby, as a coupling member is moved between the teeth of a rotating impact wheel 7 or 8 and the trailing tooth depresses the associated coupling member. An opposite end of the rocking lever 13 serves as a printing hammer 13*b*, and is moved upwardly to strike the recording medium 6 against the peripheral face of the rotating type carrier 5, to effect the impression of a preselected symbol of type thereon as a tooth of an impact wheel 7 or 8 engages a coupling member 11 or 12, and depresses said coupling member and the end of the lever 13 opposite the printing hammer 13*b*.

The rocking lever 13 is returned to a rest position by a torsion spring 14 secured to and fixed at its opposite ends to the stationary shaft 13*a* in a conventional manner. The torsion spring 14 extends from the shaft 13*a* over the printing hammer end of the rocking lever 13 and engages the top surface thereof and thereby biases the end of the rocking lever opposite the printing hammer 13*b* and the coupling members 11 and 12 into engagement with a detent or stop 18 and retains said printing hammer in the rest position shown in FIG. 1. A similar stop 19 spaced beneath the stop 18 and in alignment therewith serves to limit movement of the coupling members 11 and 12 in a printing hammer actuating direction.

The coupling members 11 and 12 are guided for rectilinear movement to be thrust between the teeth of the respective impact wheels 7 and 8 by spaced guides 11*a* and 11*b* extending along opposite sides of said coupling members and between the lower stop 19 and upper stop 18, in advance of the guides 11*a* and 11*b*, and disposed adjacent the rocking lever 13. The stops 18 and 19 are spaced apart a distance sufficient to accommodate depression of the individual coupling members 11 and 12 as moved between two teeth of the rotating impact wheels 7 and 8.

The coupling members 11 and 12 are actuated by rocking levers 11*c* and 12*c* respectively, mounted intermediate their ends on a stationary shaft 9*a* and suitably biased into return positions against a stop 12*d* by torsion springs 11*e* and 12*e*, respectively, in a conventional manner.

The lever arms 11*c* and 12*c* are actuated to thrust the respective coupling member 11 or 12 into the gap between two teeth of a respective impact wheel 7 or 8 in accordance with the type symbols to be recorded determined by the information stored, by means of electromagnets 9 and 10, moving the respective lever arms 11*c* and 12*c* in directions contrary to the bias of the respective springs. The electromagnets 9 and 10 may be energized in accordance with stored information to effect printing on the recording medium 6 in a manner well known to those skilled in the art, so not herein shown or described in detail. When at a given moment one of the two electromagnets 9 or 10 is energized, the free end of the corresponding coupling member 11 or 12, respectively, is moved into the gap between two impact teeth and depressed by the following impact tooth in the direction of movement of the impact wheels, to effect rocking movement of the rocking lever 13 and the striking of the recording medium 6 against the type carrier 5 by the printing hammer 13*b* on the end of said rocking lever.

The lower ends of the lever arms 11*c* and 12*c* are connected with a respective coupling member 11 and 12 in a suitable manner. An exemplary form of means connecting the lever arm 11*c* with a respective coupling member 11 is shown in FIGS. 1 and 1*a*. The lever arm 11 has a socket portion 11*k* receiving a rounded end of the coupling member 11 for moving said coupling member back and forth upon rocking movement of said rocking lever. The lever arms 11*c* and 12*c* and the actuating means for said lever arms and the coupling members 11 and 12 are of the same construction and are alternately actuated to first insert the coupling member 11 in the space between two teeth of the impact wheel 7 and then insert the coupling member 12 between two teeth of the impact wheel 8 having teeth 8*a* arranged in staggered relation with respect to the teeth 7*a* of the impact wheel 7, as by alternate energization of the corresponding electromagnets 9 or 10, and to return said coupling members upon deenergization of the respective electromagnets and movement of the lever arms 11*c* and 12*c* in clockwise direction by the bias of the torsion springs 11*e* and 12*e*, respectively. If desired, a suitable spring arrangement (not shown) may be provided to return the coupling members, or said coupling members may be directly coupled with the lever arms 11*c* and 12*c* to be positively returned upon the return strokes of said lever arms. A stop 11*g* limits movement of the lever arms 11*c* and 12*c* in a coupling member projecting direction.

A sliding weight 16 is slidable along a bolt 15 extending downwardly of the rocking lever 13 and movable therewith. Said sliding weight serves to shorten the rebound time after a type symbol has been printed.

The sliding weight 16 is biased into a rest position by a spring 17 extending about the bolt 15 and said sliding weight, and seated at one end on the undersurface of the rocking lever 13 and at its opposite end on a radially flanged portion of said sliding weight. Stops 16*a* and 16*b* define the limits of movement of said sliding weight. The sliding weight 16 cooperating with the rocking lever 13 serves to substantially shorten the rebound time of the rocking lever 13 after a type symbol has been printed.

In the embodiment of the invention shown in FIGS. 2 and 3, the impact wheels, coupling members, electromagnets and actuating means driven by the electromagnets are the same as in FIG. 1 so the description thereof need not be repeated herein. A rocking lever 13′ is pivoted intermediate its ends on a rock shaft 23, and is biased into a rest position against coupling members 11 and 12, by a torsion spring 14 coiled about the shaft 23 at its opposite ends and extending over and engaging the upper side of a lever arm 24 of said rocking lever. The torsion spring and rocking lever also move the coupling members 11 and 12 against the stop 18. The lever arm 24 extends in an opposite direction from the coupling members 11 and 12 within a slot 25 in the machine frame and between two connected heads 20*a* and 20*b* of a printing hammer 20. A lug 21 extends along the opposite side of the printing hammer 20 from the lever arm 24 between the heads 20*a* and 20*b* of said printing hammer and forms a stop retaining the printing hammer 20 to its guide.

The rocking lever 13′ is thus selectively coupled with the two impact wheels 7 and 8, like those shown in FIG. 1 and is

limited in movement in a printing direction by the top edge of the slot **25** and is limited in movement in an opposite direction by the stop means **19**. Thus upon energization of an electromagnet **9** or **10**, a coupling member **11** or **12** will be moved between two teeth of a respective impact wheel **7** or **8**, to effect rocking movement of the rocking lever **13** and accelerate the printing hammer **20** to strike the recording medium **6** against the peripheral surface of the type bar **5**.

As shown in FIG. **3**, shortly before the printing hammer **20** reaches the recording medium **6**, the lever arm **24** of the rocking lever **13'** will strike the upper end of the slot **25** and free the printing hammer to freely strike the recording medium **6** against the peripheral surface of the type bar **5** with an impact.

This form of the invention shortens the printing phase and by providing diametral movement of the printing hammer **20**, results in the printing of a cleaner type character. The lug **21** also serves as a safeguard to provide a stop to prevent the printing hammer **20** from falling out of its guide.

With the forms of the invention herein shown and described, and the provision of impact wheels in which each impact wheel has only half the number of impact teeth as the type of the type carrier **5**, each impact wheel effects the printing of each second symbol on the peripheral surface of the type carrier **5**, and thereby makes it possible to double the tooth distance than when employing a single impact wheel, and results in a substantial increase in the available time effective to thrust the coupling members into the gaps between the teeth of the impact wheels, with a material increase in operating speed of the apparatus over printing apparatus utilizing only one impact wheel.

In carrying out the principles of the present invention a further increase in the operating speed of the printer can be attained by the provision of an additional impact wheel in which each of the three impact wheels has only one-third of the teeth required to print all of the characters on the peripheral surface of the type carrier **5** and the impact wheels are staggered by one-third the length of a tooth pitch.

The impact wheel structure and coupling arrangement and rocking lever shown are particularly adaptable to the printing of information to be recorded, and to an additional punching operation where desired.

Within the scope of the present invention, it should be understood that the end of the rocking lever **13** adjacent the impact wheel structure may have two radially spaced operating arms disposed one after the other in the direction of operation of said rocking lever which may be staggered in time under individual coupling members, selectively coupled with the teeth of a common impact wheel, and attaining much the same results as attained by the staggered impact wheels of the present invention.

We claim as our invention:

1. In an in-line printing apparatus for the making of flying impressions of type symbols,

a type carrier having a cylindrical type-carrying surface having type symbols equally spaced therealong,

means driving said type carrier at a constant rate of speed,

a plurality of impact wheels arranged side by side and rotatable about a common axis parallel to the axis of rotation of the type carrier,

said impact wheels each having equally spaced teeth spaced apart by a pitch determined by the number of impact wheels and type symbols on the type carrier,

the teeth of one impact wheel being arranged in staggered relation relative to the teeth of the next adjacent impact wheel,

means coupled with said type carrier for driving said impact wheels at constant speeds in directions opposite to the direction of rotation of said type carrier,

a recording medium guided for movement beneath said type carrier in alignment with the periphery thereof,

a rocking lever disposed between said impact wheels and type carrier,

a pivot shaft pivoting said rocking lever for movement about an axis disposed intermediate the ends of said rocking lever and perpendicular to the axis of rotation of said type carrier,

a coupling member associated with each impact wheel,

said coupling members overlying one end of said rocking lever and

movable in planes parallel to the plane of the type carrier,

means operable to successively thrust said coupling members in the space between two teeth of an associated one of said impact wheels to effect depression of the associated coupling member and pivotal movement of the associated rocking lever in a plane perpendicular to the plane of the type carrier to effect the striking of the recording medium into engagement with the peripheral surface of said type carrier.

2. An in-line type printing apparatus in accordance with claim **1**,

wherein two impact wheels are provided, each having teeth spaced one-half pitch apart, each impact wheel having half the number of teeth as type on the peripheral surface of the type carrier,

wherein the coupling members are arranged side by side in radial alignment with the teeth of said impact wheels and are normally spaced from said impact wheels, and

wherein electromagnets are energizable to successively rock said rocking levers and alternately thrust the coupling members into the space between two teeth of the associated impact wheel.

3. An in-line printing apparatus in accordance with claim **2**,

wherein spaced stops limit rocking movement of the rocking lever and depression of the coupling members, and

wherein spring means engage said rocking lever on one side of its axis and bias the associated rocking lever in an at rest position.

4. The in-line type printing apparatus of claim **3**, wherein the end of said rocking lever engaged by said spring means extends in registry with said recording medium and type carrier in radial alignment therewith, and comprises a printing hammer striking the recording medium with type symbols on said type carrier.

5. The in-line printing apparatus of claim **4**,

wherein a sliding weight is associated with the end portion of said rocking lever serving as a printing hammer, and

wherein detent means limit movement of said sliding weight toward and from the recording medium, whereby said sliding weight serves to check rebound of the rocking lever after a type symbol has been printed.

6. The in-line printing apparatus of claim **5**,

wherein the sliding weight is movable between stop means spaced apart in the direction of printing movement of the rocking lever.

7. In an in-line printing apparatus in accordance with claim **1**,

wherein a printing hammer is disposed beneath and guided for free movement radially of the type carrier for striking the recording medium against the periphery of the type carrier, and

wherein the end of the rocking lever opposite the coupling members is operatively connected with the printing hammer to accelerate the printing hammer on the printing stroke thereof and stop means are provided to accommodate the printing hammer to move free from the end of said rocking lever to engage the recording medium with an impact force.

8. An in-line type printing apparatus in accordance with claim **7**,

wherein spring means return the free end of the rocking lever and positively move said printing hammer on a return stroke.

9. An in-line printing apparatus in accordance with claim **2**, wherein a radial guide is provided beneath said type carrier in radial alignment therewith,

wherein a printing hammer is freely guided in said guide for striking the printing medium against a type symbol on said type carrier,

wherein the printing hammer has spaced abutments,

wherein the rocking lever extends into the space between said abutments, and

wherein stop means are provided to stop movement of said rocking lever toward the type carrier prior to the end of travel of said printing hammer in a printing direction, to accelerate said printing hammer for free engagement with

the printing medium and type carrier with an impact force.

10. An in-line type printing apparatus in accordance with claim **9**,

wherein spring means engage said rocking lever and bias said rocking lever away from the peripheral surface of said type carrier, and thereby positively return said printing hammer to an at rest position at the termination of a printing operation.

* * * * *