United States Patent

Van Sciver, II et al.

[15] 3,639,215

[45] Feb. 1, 1972

[54] **METHOD OF JOINING PARTS BY PLATING**

[72] Inventors: **Herbert D. Van Sciver, II,** Merion; **Michael Mattia,** Upper Darby, both of Pa.

[73] Assignee: **The Budd Company,** Philadelphia, Pa.

[22] Filed: **Dec. 7, 1970**

[21] Appl. No.: **95,549**

[52] **U.S. Cl.** **204/16,** 29/460, 204/25

[51] **Int. Cl.** **C23b 7/00,** C23b 5/56

[58] **Field of Search** 204/16, 25; 29/460

[56] **References Cited**

UNITED STATES PATENTS

1,275,687	8/1918	Hodgson	204/16
1,454,425	5/1923	Chapman	204/16
2,761,828	9/1956	Eldredge et al.	204/16
3,242,565	3/1966	North et al.	29/487
3,455,014	7/1969	Beyer	29/460
3,514,378	5/1970	MacDougall et al.	204/3

Primary Examiner—John H. Mack
Assistant Examiner—T. Tufariello
Attorney—Thomas I. Davenport, Edward M. Farrell, John B. Sowell, Alford L. Trueax, Jr. and William R. Nolte

[57] **ABSTRACT**

A method of joining a number of parts by electrodeposition is provided. The component parts are accurately positioned on a fixture in spaced-apart relationship. The spaces between adjacent parts are filled in first with a resinous material and then with a conductive coating after which a metal is then deposited on the adjacent parts bridging the spaces therebetween.

3 Claims, 7 Drawing Figures

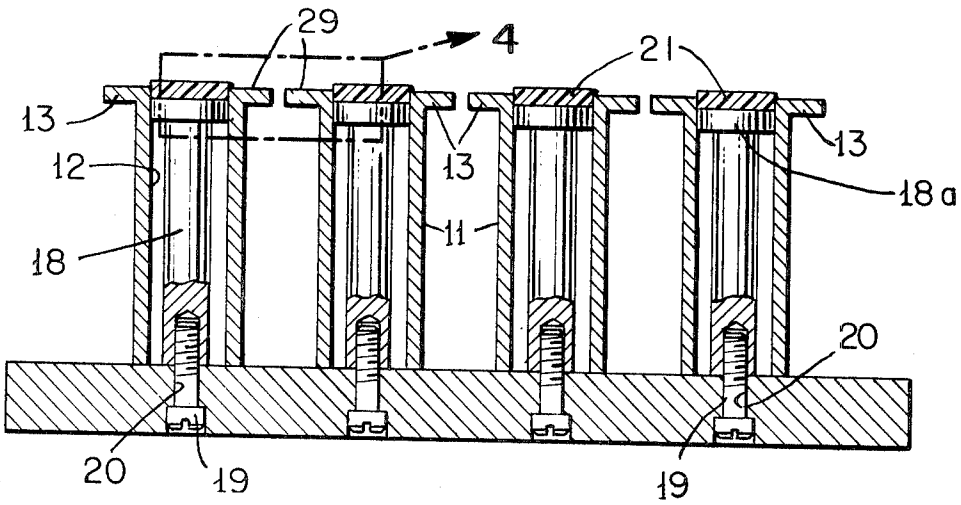

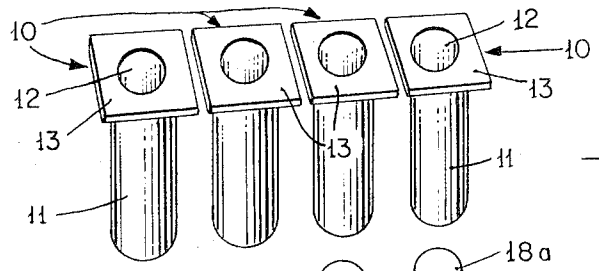

Fig.1

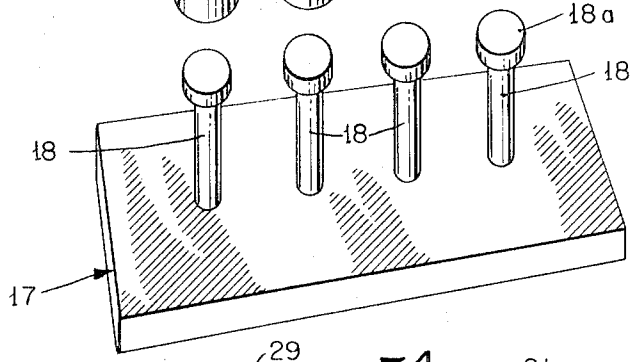

Fig.2

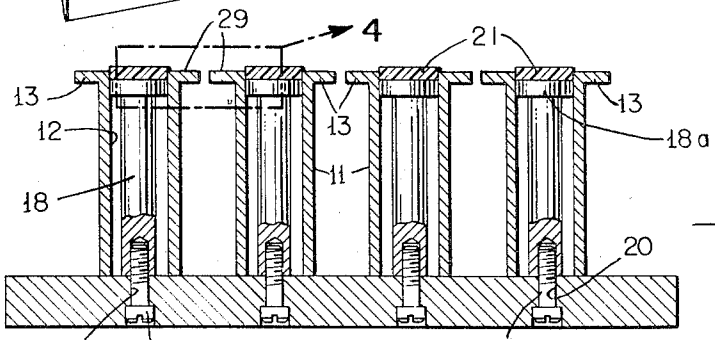

Fig.3

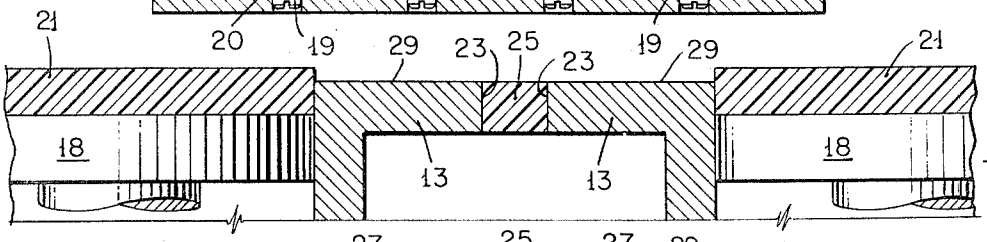

Fig.4

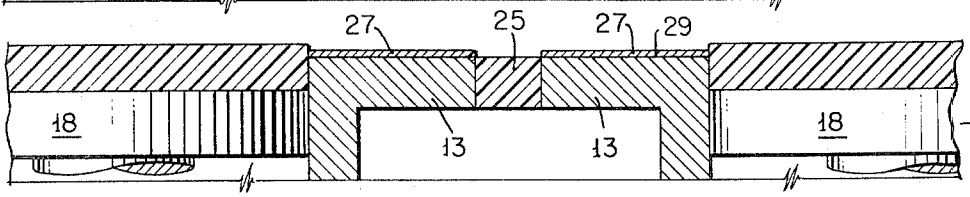

Fig.5

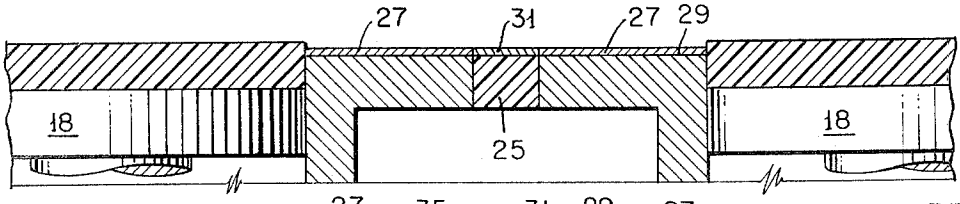

Fig.6

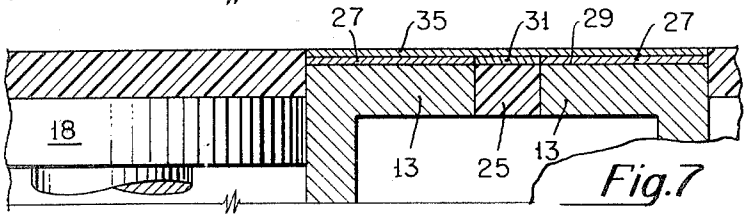

Fig.7

INVENTORS
HERBERT D. VAN SCIVER, II
MICHAEL MATTIA
William R. Nolte
AGENT

METHOD OF JOINING PARTS BY PLATING

Heretofore when fabricating parts by conventional methods such as by casting, welding and brazing it has been found difficult to prevent distortion of the parts. The distortion has been due to the extremely high temperatures involved in the performance of such methods. Such conventional methods have been found to be disadvantageous and unacceptable due to the fact that high precision and extremely close tolerances have been difficult to maintain, particularly when joining a number of parts together.

Accordingly it is the principal object of this invention to provide an improved method of joining metal parts which avoids one or more of the disadvantages of the prior art methods and which provides joints free of distortion.

It is another important object of this invention to provide an improved method of joining spaced-apart metal parts and joining the parts by bridging the space with a metal coating therebetween.

For a better understanding of the present invention together with other and further objects thereof, reference is had to the following description taken in connection with the accompanying drawing.

In the drawing,

FIG. 1 is an elevational perspective view showing a plurality of metal parts to be joined together;

FIG. 2 is an elevational perspective view showing a fixture having a plurality of accurately positioned locator pins projecting upwardly from the base of the fixture;

FIG. 3 is an elevational view in cross section showing the parts of FIG. 1 slipped on the aligned locator pins and maintained in spaced-apart relationship;

FIG. 4 is an elevational cross-sectional view of the enclosed portion indicated by numeral 4 of FIG. 3, greatly enlarged but showing a connecting material between flange portions of the spaced-apart elements;

FIG. 5 is a view similar to that shown in FIG. 4 but showing a coating applied to the flange portions of the parts;

FIG. 6 is a view similar to that shown in FIG. 5 but showing an electrically conductive metal coating applied over the bridging resin material and connecting the metal coating applied to the adjacent positioned parts;

FIG. 7 is a view similar to that shown in FIG. 6 but showing an additional coating adhered over the previous coatings applied to the flange portions of the parts and the coating over the resinous bridging material.

Referring to FIG. 1 there is shown a plurality of parts **10**, in the present instance, made of aluminum. Each part consists of a cylindrical portion **11**, having an accurately machined bore **12** therein, and a laterally extending flange **13** extending from the top of the cylindrical portion. In accordance with the invention, the plurality of parts **10** can be joined together by providing a fixture **15** which consists of a base portion **17** and a plurality of upright locator pins **18** affixed thereto by means of screws **19** which project up through apertures **20** of the base portion. The locator pins **18** each include an enlarged head portion **18***a* having a top layer **21** of electrically nonconductive material. In FIGS. 2 and 3 the head portion **19** is cylindrical in form and is of the same diameter to snugly fit the bore **12** of the cylindrical portion **11** of the part.

With the parts so positioned as seen in FIG. 3, with the flange portions **13** of adjacent parts coplanar and aligned in uniformly spaced relationship, the spaces between the edges **23** of the individual parts **10** is filled in with a connecting material **25** such as epoxy as seen in FIG. 4. The material **25** is permitted to harden and bridges the gap between adjacent flanges and provides a continuous planar surface.

With reference now to FIG. 5 a zinc coating **27** is deposited to surface **29** of adjacent flanges **13** of parts **10** by a double immersion process in the presence of a sodium zincate solution. A typical solution is as follows:

Sodium hydroxide	16 oz./gal.
Zinc oxide	2.7 oz./gal.
Rochelle salts	6.7 oz./gal.
Ferric chloride	0.40 oz./gal.
Sodium nitrate	0.13 oz./gal.

The above solution is not adhered to either the layer **21** on top of the locator pins **18** and the resinous bridge material **25** due to the fact that both are electrically nonconductive.

With reference now to FIG. 6 a layer **31** of conductive material is applied to the outer surface of the resinous bridge material **25** to join the zinc coating **27** deposited in adjacent flanges **13** of the parts. The layer **31** may be in the form of silver paint and it establishes an electrical connection between adjacent zinc coatings **27** on the opposed adjacent flanges. Thereafter a further layer of metal such as nickel or copper **35** is electrodeposited over the previous layers **27, 31** to a desired thickness. If nickel is desired, the coating may be applied by means of a nickel sulfamate bath comprised as follows:

Nickel sulfamate	43.6 oz./gal.
Nickel content	10.2 oz./gal.
Nickel chloride	0.8 oz./gal.
Boric acid	5.0 oz./gal.
Wetting agent	0.2 fl.oz./gal.

Nickel may also be deposited from other solutions such as Watt's type nickel solution containing nickel sulfate and nickel chloride. The layer of nickel **35** is deposited on the zinc layer **27** and silver paint layer **31** of a desired thickness commensurate with the strength requirements desired. Any excess buildup of electrodeposit of nickel **35** may be suitably machined off the mechanical structure so produced to achieve the degree of flatness required. Also while the foregoing description of joining has considered parts of aluminum, it is apparent that copper could be substituted for the aluminum. It is to be noted further that the above electrodeposition joining process may be accomplished at room temperature or slightly thereabove thereby eliminating distortion and warpage which accompanies conventional joining methods.

While there has been described what at present is considered to be a preferred embodiment of the invention, it will be obvious to those skilled in the art that various changes may be made therein without departing from the scope of the invention.

What is claimed is:

1. The method of joining first and second parts of metal which comprises providing a fixture having locator pins thereon, positioning said first and second parts on said locator pins with an edge portion of said first part being disposed in spaced-apart relation to an edge portion of said second part, applying a material between the edges of said first and second parts to bridge the space therebetween, depositing a coating of zinc to said parts of metal in the presence of a zincate solution, applying a conductive coating to the bridging material between the spaced parts to connect the zinc coating deposited on each of said parts, and thereafter depositing a coating of nickel in the presence of a nickel bath on said conductive coating and the zinc coating deposited on each of said parts.

2. In the method of joining first and second parts of metal as set forth in claim 1 wherein said parts are of aluminum and wherein said material bridging said parts is a resinous electrically nonconductive material.

3. In the method of joining first and second parts of metal as set forth in claim 1 wherein the coating applied to said bridging material is an electrically conductive material such as silver paint.

* * * * *