United States Patent

[11] **3,632,977**

[72] Inventor **Kiyosumi Takayasu**
No. 2, 5-Chome, Horita-Dori, Mizuho-ku, Nagoya, Japan

[21] Appl. No. **101,970**
[22] Filed **Dec. 28, 1970**
[45] Patented **Jan. 4, 1972**
[32] Priorities **Jan. 12, 1970**
[33] **Japan**
[31] **45/3409;**
Mar. 9, 1970, Japan, No. 45/22175

[54] **IMMERSION HEATER**
6 Claims, 8 Drawing Figs.

[52] **U.S. Cl.** **219/335,** 219/538
[51] **Int. Cl.** **H05b 1/00**
[50] **Field of Search** 219/335, 353, 354, 316, 375, 538, 544; 338/226, 243, 238

[56] **References Cited**

UNITED STATES PATENTS

2,659,795	11/1953	Boggs	338/238 X
2,727,120	12/1955	Boggs	338/238 X
3,340,382	9/1967	Lennox	219/544

Primary Examiner—C. L. Albritton
Attorneys—Robert E. Burns and Emmanuel J. Lobato

ABSTRACT: An electric immersion heater having one or more heating element assemblies fittingly enclosed by a corrosion-resistant cover made of substantially equal two halves and having a cord inlet opening. A feeder cord is secured to the inlet opening, and its conductors are bared between the inlet opening and the terminal of the heating element assembly, which bare conductor portion is insulated in at least two layers, a short porcelain tube layer and a thermally contractable silicone tube.

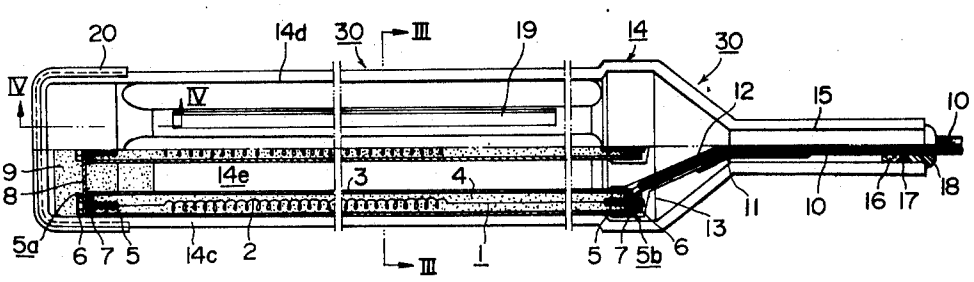

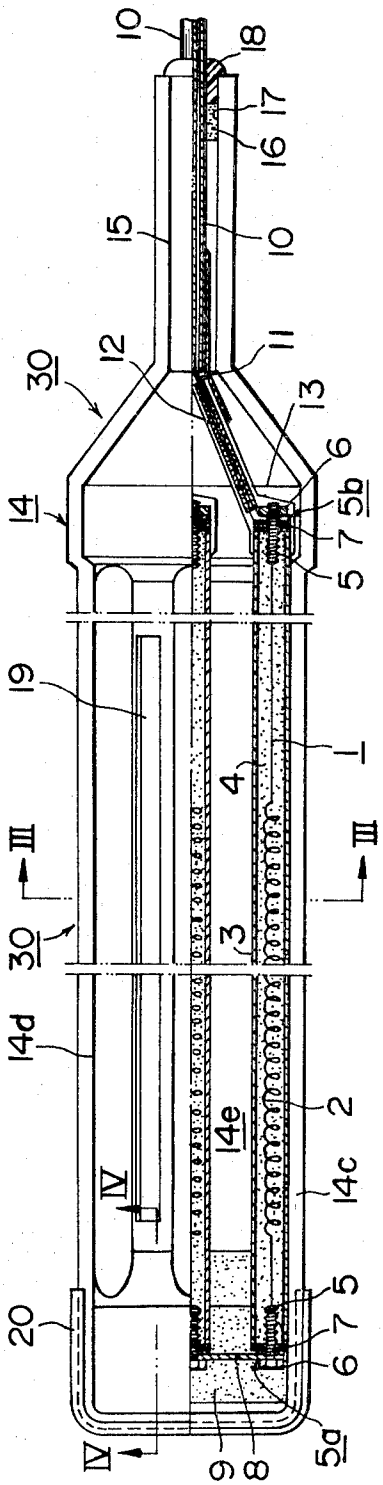
10
18
17
16
15
10
11
12
30
13
6
5b
7
5
14
19
1
4
III
III
30
3
14d
2
14e
14c
IV
5
7
6
20
IV
9
8
5a

FIG. 1

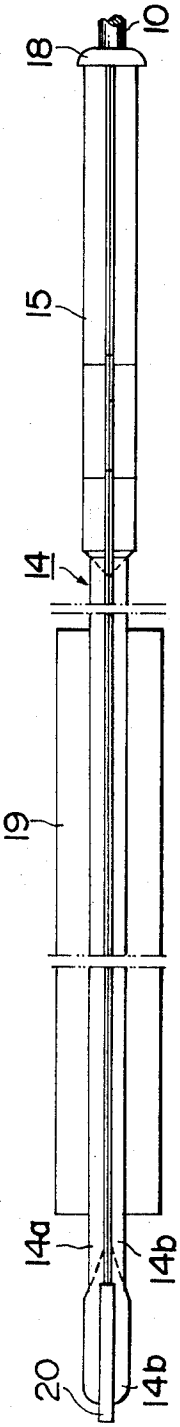
18
10
15
14
19
14a
14b
20
14b

FIG. 2

FIG.3

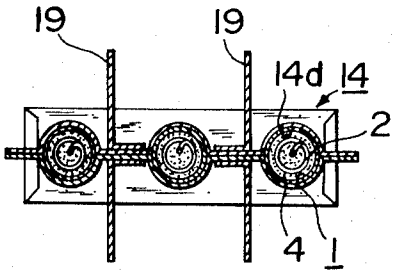

FIG.4

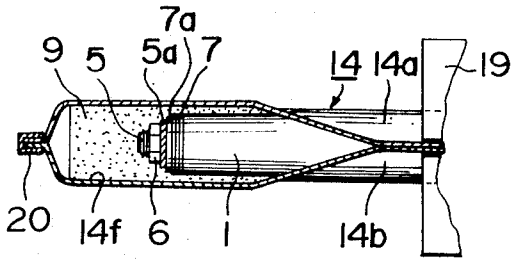

FIG.5

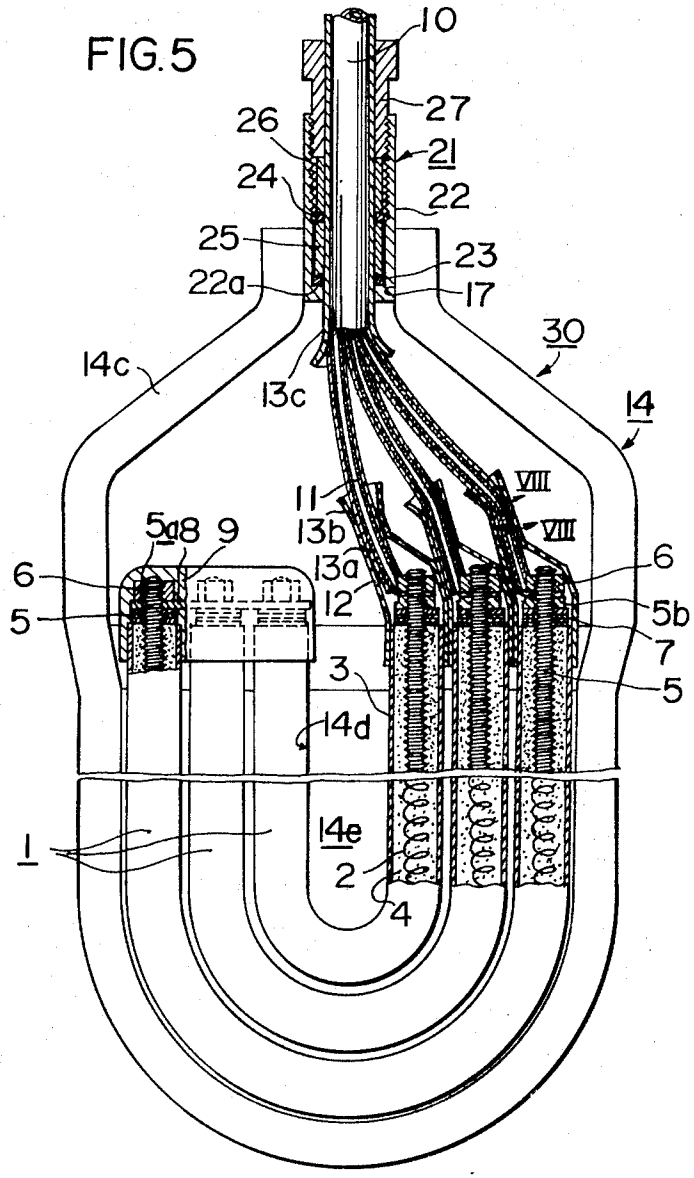

FIG.6

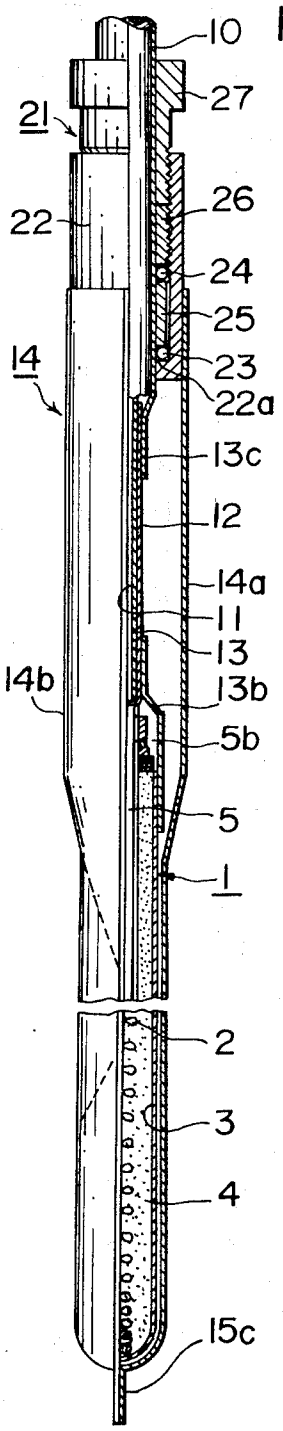

FIG.7

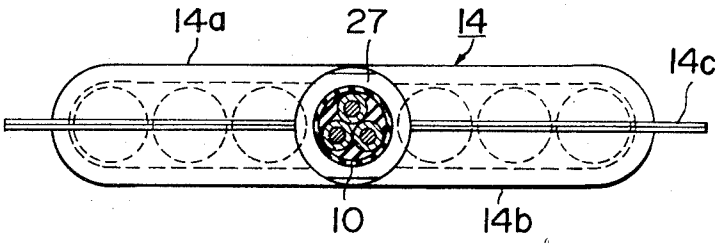

FIG.8

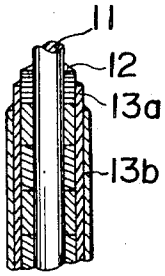

IMMERSION HEATER

This invention relates to an immersion heater, and more particularly to an immersion heater suitable for heating liquid such as electrolytes and chemical treating solutions.

An immersion heater for heating liquid should have proper electric insulation which is well protected against the liquid being heated, and it should be able to effect high-speed heating at a high efficiency. Furthermore, the immersion heater should be free from any electrical faults during operation in liquid, so as to ensure a long service life.

Conventional immersion heater has a shortcoming in that its electric insulation is liable to electric leak and its insulation tends to be fairly quickly deteriorated by moisture and corrosion, so that it is exposed to the risk of electric faults.

Therefore, an object of the present invention is to obviate the aforesaid difficulty of known immersion heater, by providing an improved immersion heater in which lead wires and their connecting terminals to heating wires are well protected from electric leak caused by moisture and overheating, which heater includes a wide contact area with the liquid being heated, so as to ensure a high heating efficiency.

Another object of the present invention is to provide an improved immersion heater having terminals connected to lead wires well protected from electric leak caused by moisture and overheating, and sheathed heating element assembly covered by a corrosion-resistant member (for instance, stainless steel, titanium, zirconium, and tantalum), whereby a long service life is ensured while maintaining a high heating efficiency.

For a better understanding of the invention, reference is made to the accompanying drawings, in which:

FIG. 1 is a schematic plan view of an immersion heater of the present invention, shown with one half thereof in section;

FIG. 2 is an elevation of the immersion heater;

FIG. 3 is a sectional view, taken along the line III—III of FIG. 1;

FIG. 4 is a sectional view, taken along the line IV—IV of FIG. 1;

FIG. 5 is a schematic elevation of another embodiment of the present invention, illustrated with one side cover removed for showing the inside structure of heating element assemblies;

FIG. 6 is a side elevation, as seen from the left-hand of FIG. 5;

FIG. 7 is a plan view of the immersion heater of FIG. 5; and

FIG. 8 is a fragmentary sectional view of the immersion heater, taken along the line VIII—VIII of FIG. 5.

Like parts are designated by like numerals throughout the drawings.

Referring to FIGS. 1 to 4, an immersion heater 30 of the present invention includes a number of heating element assemblies 1, each consisting of a heating wire 2, e.g., a nichrome wire sealed in a corrosion-resistant metallic sheath 3. To hold the heating wire 2 in position within the sheath 3, electrically insulating heat-conductive powder 4 is filled in the sheath 3. A terminal rod 5 is provided at each end of the heating element assembly 1, which is electrically connected to each end of the heating wire 2 but insulated from the sheath 3 by inserting mica plates 7 therebetween. The mica plates 7 are integrally secured to the sheath 3 by a suitable means so as to act to seal the electric insulating powder 4 in the sheath 3. One end of the heating wire 2, e.g., the right-hand end in FIG. 1, is connected to the core conductor 11 of a cabtyre cord 10 by means of a connecting nut 6, while the opposite end of the heating wire 2, e.g., the left-hand end in FIG. 1, is connected to a conductor plate 8 by a connecting nut 6.

The number of the heating element assemblies 1 in the immersion heater 30 is selected by considering various electrical requirements and the heating capacity of the heater. In the illustrated embodiment, three such heating element assemblies 1 are disposed in parallel with each other for three-phase application. The right-hand ends of the three assemblies 1 are connected to three conductors 11 of the cabtyre cord 10, which is in turn connected to a three-phase power source (not shown). The opposite ends, or the left-hand ends of the three assemblies 1 in FIG. 1, are connected to a common joint, such as a conductor plate 8, so that the immersion heater 30 is star-connected to the power source.

Referring to FIGS. 1 and 4, the left-hand end of each heating element assembly 1 is connected to a terminal portion 5a of the conductor plate 8 by a suitable means, such as a washer 7a and a nut 6 both engaging the terminal rod 5. After the conductor plate 8 is secured to the left-hand ends of all the three heating element assemblies 1, the conductor 8 and the related parts which are exposed to power source voltage are coated with an insulating material, such as varnish (not shown), and placed in the recess 14b of a corrosion-resistant metallic cover 14, as will be described hereinafter. Thereafter, suitable filler 9 free from foaming, such as polyester premix, are forced into the recess 14b for the purpose of shaping the free end portion of the immersion heater 30.

Similarly, a terminal 5a is connected to the free end of each core conductor 11 of the cabtyre cord 10, and the terminal 5b is then secured to the terminal rod 5 of the corresponding heating element assembly 1 by a suitable means, such as a nut 6 engaging a threaded portion of the terminal rod 5. Thus, the terminal 5b is urged against the mica plate 7. A suitable length of the core conductor 11 is bared by removing rubber or plastics insulation therefrom, and a plurality of short porcelain tubes 12 are mounted thereon, so as to provide an intermediate heat-interrupting portion between the heating element assembly 1 and the inlet opening 17 of the cover 14 of the immersion heater 30. For ensuring high electric insulation between the electrically charged portion relating the terminal 5b and the corrosion-resistant metallic cover 14, as well as among the heating element assemblies 1 with each other, a contractable silicone tube 13 is fitted on each free end of the core conductors 11. Each silicone tube 13 is extended from the end of the rubber or plastics insulation of the cord 10 through the terminal 5b, as shown in FIG. 1.

The corrosion-resistant metallic cover 14 consists of a pair of substantially identical halves 14a, 14b (FIG. 2), each having three linear grooves 14d adapted to fittingly enclose the heating element assemblies 1, respectively, and a recess 14f (FIG. 4) adapted to receive the common joint portion of the three heating element assemblies 1, together with the conductor bar 8. Each half of the cover 14 has a peripheral ear portion 14c and land portion 14e, so that when the two halves 14a, 14b are arranged face-to-face so as to fittingly enclose the three heating element assemblies 1, the two halves can gastightly be joined together by seam-welding the ear portions 14c and the land portions 14e between adjacent linear grooves 14d, as can be seen from FIG. 3.

The corrosion-resistant metallic cover 14 also includes a connecting shank portion 15, at the end opposite to the recess 14f for the common conductor 8. The connecting shank portion 15 is to hold the incoming cabtyre cord 10 between the terminals 5b and an outlet opening 17 thereof, as shown in FIG. 2. The illustrated immersion heater 30 includes a fairly long shank portion 5, so that the heating element assemblies 1 of the heater 30 may be disposed deep in a liquid to be heated, while keeping the cord 10 above the liquid. The deep immersion of the heating element assemblies 1 in the liquid increases the contact area between the heater 30 and the liquid being heated, so as to improve the heating efficiency of the heater 30.

In order to provide gastight sealing at the outlet opening 17, a sealing ring 16, for instance, an epoxy resin ring, is fitted between the inner surface of the inlet opening 17 and the outer surface of the cabtyre cord 10. Furthermore, a plug 18, e.g., made of hard vinyl, is fitted to the outer end of the opening 17, for ensuring the gastight sealing at the incoming portion of the cabtyre cord 10.

A plurality of radiator fins 19 are secured to the outer surfaces of the corrosion-resistant metallic cover 14, for providing a wide effective heat transmitting area. A reinforcing member 20 is mounted on the extreme left end of the metallic cover 14, for ensuring the airtight connection between the two

halves **14a**, **14b** of the cover **14** around the common joint of the three heating element assemblies **1**. The metallic cover **14**, the fins **19**, and the reinforcing member **20** are preferably made of a suitable corrosion-resistant metal, such as stainless steel, titanium, zirconium, or tantalum.

In order to limit the heat transmitted to the terminal rods **5** at opposite ends of each heating element assembly **1**, it is preferable to provide straight portions of the heating wire **2** toward the ends of the sheath **3**, as shown in FIG. **1**. Thereby, the temperature of the terminals **5a** and **5b** connected to the terminal rods can be kept within a reasonable limit.

FIGS. **5** to **8** illustrate another embodiment of the invention, which uses three U-shaped heating element assemblies **1**. Each heating element assembly **1** of this embodiment also consists of a U-shaped corrosion-resistant metallic tube or sheath **3**, a heating wire **2**, and electrically insulating heat-conductive powder **4** filled in the sheath **3** for keeping the heating wire **2** in position. A pair of terminal rods **5** are secured to the opposing ends of the sheath, while inserting mica plates **7** between the rods **5** and the sheath **3** for providing a high electric insulation therebetween. Each rod **5** is electrically connected to the corresponding end of the heating wire **2**. The mica plates **7** are secured to the sheath by a suitable means (not shown), so as to keep the electric insulating powder **4** in the sheath **3**.

The number of the heating element assemblies **1** in the immersion heater **30** can be determined, depending on the specific needs of each application. For illustration, three such U-shaped heating element assemblies are used in the embodiment of FIGS. **5** to **7**, for the use with a three-phase power source (not shown).

Each of the core conductors **11** of a three-conductor cabtyre cord **10** is provided with a terminal **5b**, which is secured to the corresponding terminal rod **5** of the heating element assembly **1**, by means of a fastening nut **6**. A certain length of the core conductor is bared by removing its insulation, and a plurality of short porcelain tubes **12** are fitted thereon, so as to insulate the core conductor **11** from the outside heat. The porcelain tubes **12**, of course, provide a high electric insulation to the core conductors **11**. A first silicone contractable tube **13a** is applied on each train of porcelain tubes **12** covering individual core conductors **11**. As can be seen from FIGS. **5** and **8**, a second silicone contractable tube **13b** is mounted on each core conductor **11**, so as to cover both the first silicone tube **13a** and the connecting portion of the terminal **5b** to the heating element assembly **1**. The lower end of the second silicone contractable tube **13b** completely encloses the connecting end portion of the heating assembly **1**, the mica plate **7**, the terminal **5b**, the nut **6**, and the end portion of the terminal rod **5**. Thus, each heating element assembly **1** is perfectly prevented from electric leak, because the connecting portion is fully sealed against moisture by the double silicone tubes **13a**, **13b**.

The opposite end of each U-shaped heating element assembly **1** is connected to the corresponding terminal portion **5a** of a connecting bar **8**, and fastened thereto by a nut **6**. After all the three heating element assemblies **1** are connected to the connecting bar **8**, the joint portions between the terminal rods **5** and the bar **8** are coated with a suitable insulating material, such as varnish (not shown), and then a suitable filler **9** free from foaming, such as polyester premix, is applied to the joint portions and shaped, as shown in FIG. **5**.

The heating element assemblies, thus connected together, are covered by a corrosion-resistant metallic cover **14**, as in the case of the preceding embodiment. The cover **14** consists of two halves **14a** and **14b**, each having form-fit portions **14d** so shaped as to fit the outer peripheries of the elements **1**, a peripheral ear portion **14c**, and a central land portion **14c**, and a central land portion **14e**. After being fitted to the heating element assemblies **1**, the two halves **14a** and **14b** are gastightly joined together by seam-welding the ear portions **14c** and the land portion **14e**.

An outlet opening **17** is formed at one end of the cover **14**, for introducing a three-conductor cabtyre cable **10** to the heating element assemblies **1**. A cap **21** is mounted on the outlet opening **17** for holding the cabtyre cable **10**, which comprises a cylinder **22**, a pair of annular packings **23**, **24**, a pair of spacers **25**, **26** for providing spaces for the packings, and a tightening bushing **27**.

To hold the annular packing **23**, an annular shoulder portion **22a** is formed at the lower end of the cylinder **22**. The bushing **27** is threaded so as to engage a coacting tapped portion of the cylinder **22**. Thereby, the packings **23**, **24** are urged against the cord **10** with a suitable pressure for providing the desired gastight sealing therebetween.

The inner diameter of the annular packings **13**, **14** is so chosen as to fit the outer periphery of the cabtyre **10**. Those surfaces of the spacers **25**, **26** which engage the annular packings **23**, **24** are so tapered that upon application of downward pressure, in FIG. **5**, the tapered surfaces act as wedges for urging the annular packings against the peripheral surface of the cabtyre cable **10**. Accordingly, the cabtyre **10** is firmly grasped by the cap **21** at the packings **23**, **24**.

In order to mount the cabtyre cable **10** on the corrosion-resistant metallic cover **14**, the cabtyre cable **10** is inserted through the bushing **27**, and then the bushing **27** carrying the cable **10** is fitted on the cylinder **22** of the cap **21**, which is premounted on the cover **14**. It is preferable to insert a thermally contractable tube **13c** between the cable **10** and the cap **21** for the cable protection, as shown in FIGS. **5** and **6**. As the bushing **27** is screwed into the cylinder **22**, the annular packings **23**, **24** are forced to the cabtyre **10**, due to the aforesaid wedge action of the spacers **25**, **26**, so as to integrally secure the cable **10** to the cap **21**. After the tightening, the bushing **27** is locked to the cylinder **22** by a suitable means (not shown), for preventing the bushing from slackening.

Suitable materials for the corrosion-resistant metallic cover **14** include stainless steel, titanium, zirconium, and tantalum.

The material for the thermally contractable tubes **13a** to **13c** may be selected while considering the kind of the liquid to be heated. Typical materials for such contractable tubes are vinyl chloride and Teflon (trademark of DuPont Company).

The salient features of the immersion heater according to the present invention are as follows.

1. The immersion heater is free from electrical troubles, such as leak and insulation deterioration, because the connecting end portions of the core conductors of a cabtyre cord, which are secured to the hot heating element assemblies **1** through terminals **5b**, are heat insulated by a plurality of short porcelain tubes **12**, while covering the porcelain tubes **12** and the terminals **5b** with contractable silicone tubes **13**. The provision of the linear portions of the heating wires **2** toward the connecting rod **5** also acts to limit the temperature rise of connecting portions of the heating element assemblies to the cabtyre cord.

2. The immersion heater is free from moisture troubles, because the entry of the cabtyre cord **10** to the shank **15** of the metallic cover **14** is gastightly sealed by the sealing plug and cap, made of epoxy resin or the like. Furthermore, the silicone tubes **13**, or **13a** to **13c**, assist the protection of the connecting portions from moisture.

3. The heating efficiency of the immersion heater is high, and any fluid can be heated effectively and quickly, because the provision of the shank portion **15** allows the immersion of the heating element assemblies **1** deep in the fluid being heated. The fins **19** secured to the outer surfaces of the metallic cover **14** further improves the heating efficiency, by increasing the effective heating surface of the heater.

What is claimed is:

1. An electric immersion heater, comprising at least one heating element assembly (**1**) consisting of a heating wire (**2**) sealed in a heat-conductive tubular sheath (**3**) which is electrically insulated from the heating wire by filling electrically insulating heat-conductive powder (**4**) therebetween, the heating wire having opposite ends connected to terminal rods (**5**) secured to opposite ends of the tubular sheath; a corrosion-resistant metallic cover (**14**) consisting of two equal halves

fittingly enclosing the heating assembly, while forming a connecting cavity enclosed by the cover and a shank portion (**15**) with a cord inlet opening (**17**);

a multicore electrical cord (**10**) sealingly secured to the opening (**17**) by a plug (**18**) and having core conductors (**11**) connected to the terminal rods (**5**) by tightening nuts (**6**);

a plurality of short porcelain tubes (**12**) fitted on bare portions of the conductors extending between the terminal rods (**5**) and the cover opening (**17**);

a plurality of thermally contractable silicone tubes (**13**), each enclosing one of the conductors (**11**) over the short porcelain tubes (**12**) fitted thereon, while enclosing the connecting portion of the conductor, inclusive of the terminal rod (**5**) and the tightening nut (**6**) connected thereto.

2. An electric immersion heater, comprising a plurality of U-shaped heating element assemblies (**1**), each consisting of a heating wire (**2**) sealed in a U-shaped heat-conductive tubular sheath (**3**) which is electrically insulated from the heating wire by filling electrically insulating heat-conductive powder (**4**) therebetween, the heating wire having opposite ends connected to terminal rods (**5**) secured to opposite ends of the tubular sheath;

a corrosion-resistant metallic cover (**14**) consisting of two equal halves fittingly enclosing the heating assemblies, while forming a connecting cavity enclosed by the cover and a cord inlet opening (**17**); a multicore electric cord (**1**) sealingly secured to the opening (**17**) by a cap (**21**) and having core conductors (**11**) connected to the terminal rods (**5**) tightening nuts (**6**);

a plurality of short porcelain tubes (**12**) fitted on bare portions of the conductors extending between the terminal rods (**5**) and the opening (**17**); a plurality of thermally contractable

first silicone tubes (**13*a***), each enclosing one of the conductors (**11**) on the outside of the short porcelain tubes (**12**) fitted thereon; and

a plurality of thermally contractable second silicone tubes (**13*b***), each covering one of the first silicone tubes (**13*a***) together with the associated connecting portion of the conductor, inclusive of the terminal rod (**5**) and the tightening nut (**6**) connected thereto.

3. An electric immersion heater according to claim **1**, wherein the heating element assemblies (**1**) are straight and disposed in parallel with each other.

4. An electric immersion heater according to claim **3** and further including a common connecting bar (**8**), wherein three straight heating element assemblies (**1**) are used, which are star-connected by joining one ends of the heating element assemblies in common to the connecting bar (**8**), and said cord (**10**) has three core conductors (**11**), each connected to the opposite end of the corresponding heating element assembly (**1**).

5. An electric immersion heater according to claim **2** and further including a common connecting bar (**8**), wherein three U-shaped heating element assemblies (**1**) are used, which the star-connected by joining one ends of the heating element assemblies in common to the connecting bar (**8**), and said cord (**10**) has three core conductors (**11**), each connected to the opposite end of the corresponding heating element assembly (**1**).

6. An electric immersion heater according to claim **1**, wherein the corrosion-resistant cover has at least one heat radiating fin integrally secured thereto.

* * * * *