United States Patent

[11] 3,626,491

[72] Inventor John H. Grosser
148 Scofield Ave., Bridgeport, Conn.
06605

[21] Appl. No. 853,400
[22] Filed Aug. 27, 1969
[45] Patented Dec. 7, 1971

[54] **SOLENOID-OPERATED DISPENSER FOR PRESSURE-SENSITIVE TAPE**
11 Claims, 8 Drawing Figs.

[52] **U.S. Cl.** **225/8,** 225/11, 225/21
[51] **Int. Cl.** **B26f 3/02**
[50] **Field of Search** 225/8, 11, 21

[56] **References Cited**

UNITED STATES PATENTS

2,258,912 10/1941 Steen et al. 225/11
2,892,596 6/1959 Fishel et al. 225/21
3,065,889 11/1962 Grosser 225/8

Primary Examiner—Andrew R. Juhasz
Assistant Examiner—Leon Gilden
Attorney—Wooster, Davis & Cifelli

ABSTRACT: A roll of pressure-sensitive adhesive tape is mounted to be freely rotatable and its end is passed over a toothed tape feeding wheel which may be advanced in predetermined increments to draw tape off the roll. The end of the tape is manually lifted against a cutting edge which severs the tape and at the same time lifts a trigger mechanism. The trigger mechanism works through a time delay to close the switch. The switch in turn energizes a solenoid which has a plunger normally spring biased to its deenergized position. The plunger advances to its energized position, releasing the switch and simultaneously engaging the tape feeding wheel through a pawl and ratchet arrangement. When the springs return the plunger to its deenergized position, they simultaneously advance the tape feeding wheel.

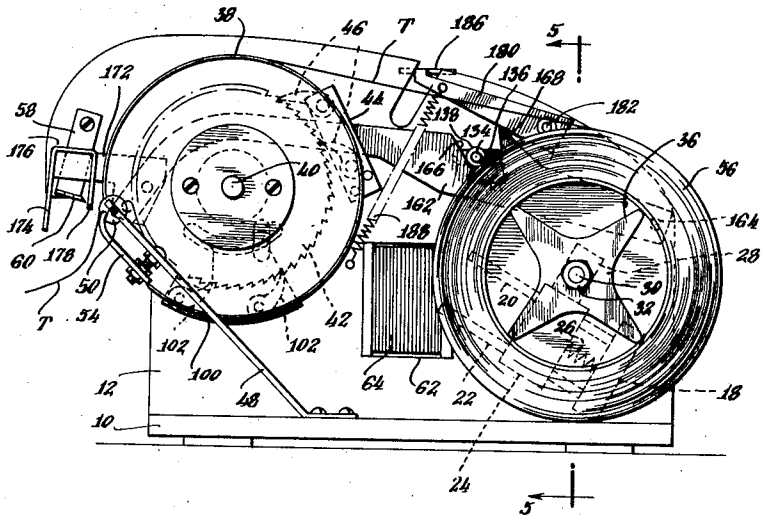

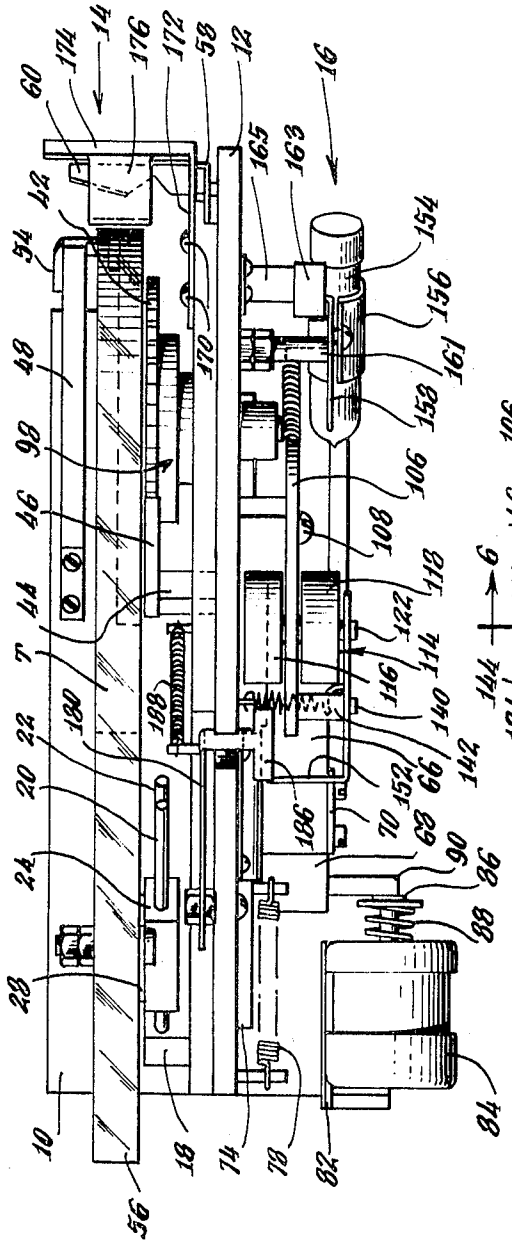

Fig. 1.

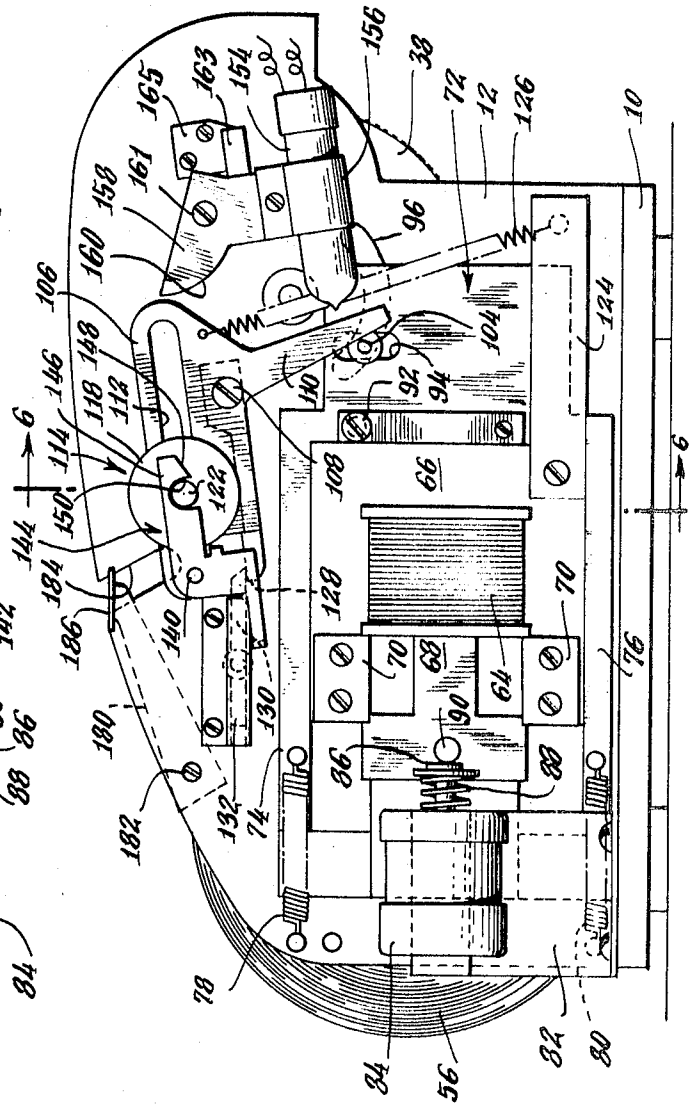

Fig. 2.

INVENTOR.

BY John H. Brown

Webster, Slavin & Cipolla

ATTORNEYS.

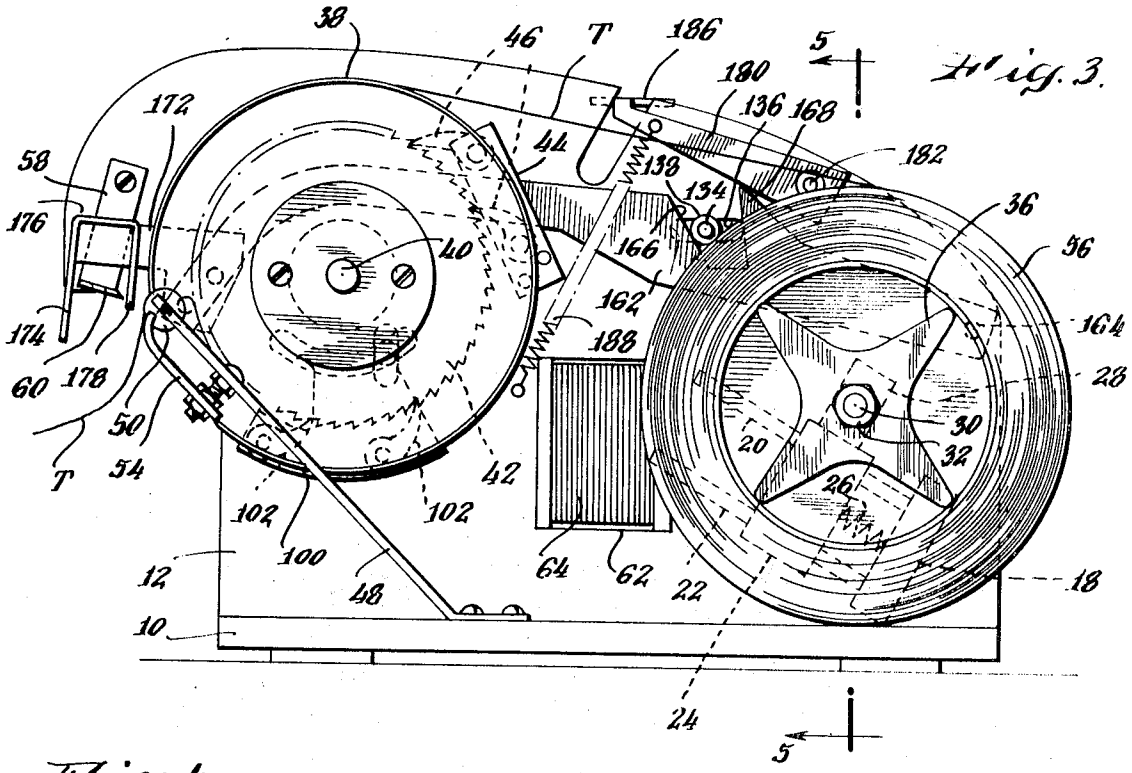

Fig. 3.

Fig. 4.

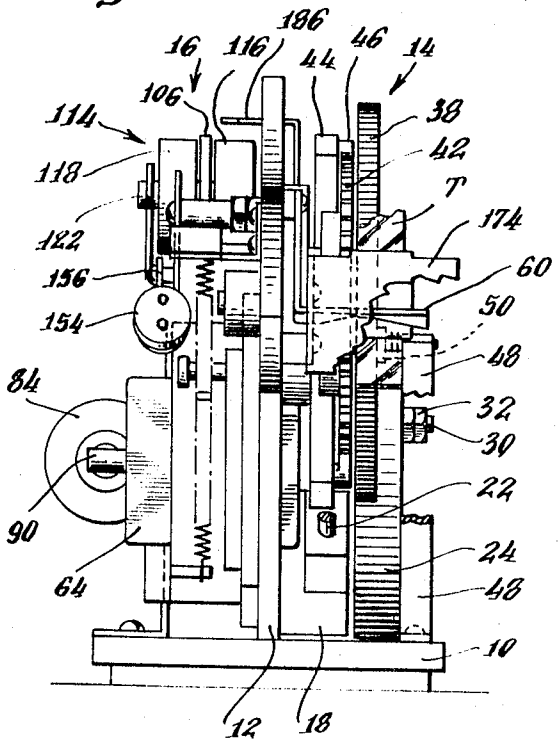

Fig. 5.

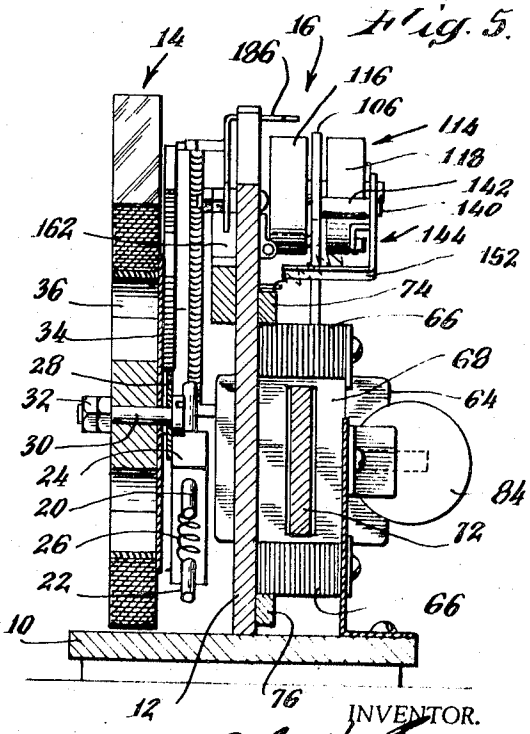

INVENTOR.

BY John H. Brown

Wooster, Davis & Cipelli

ATTORNEYS.

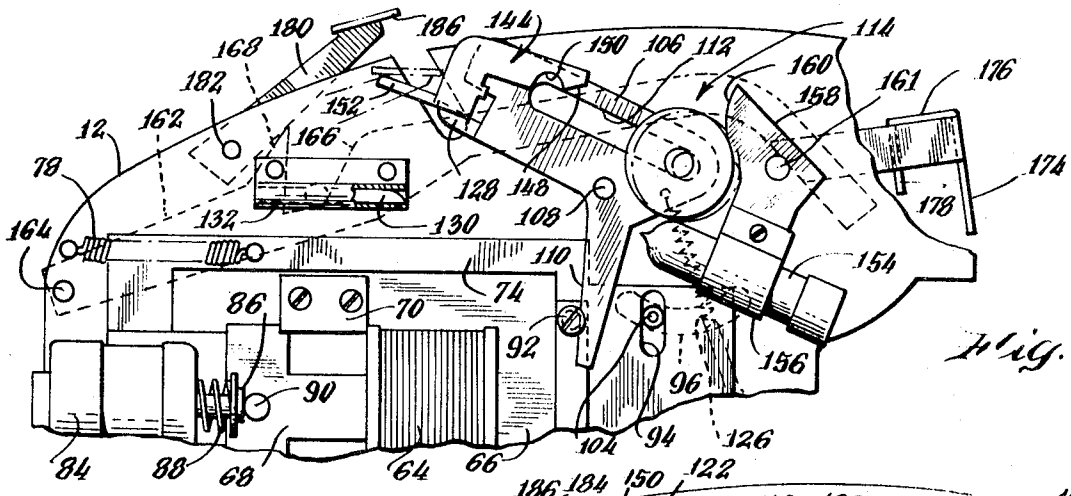

Fig. 7.

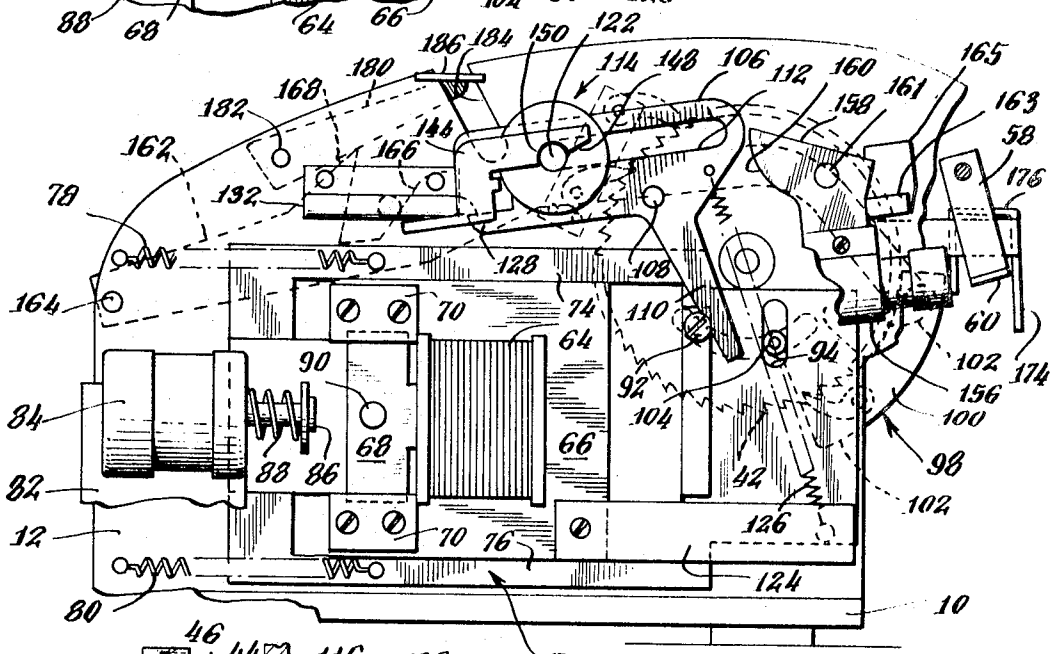

Fig. 8.

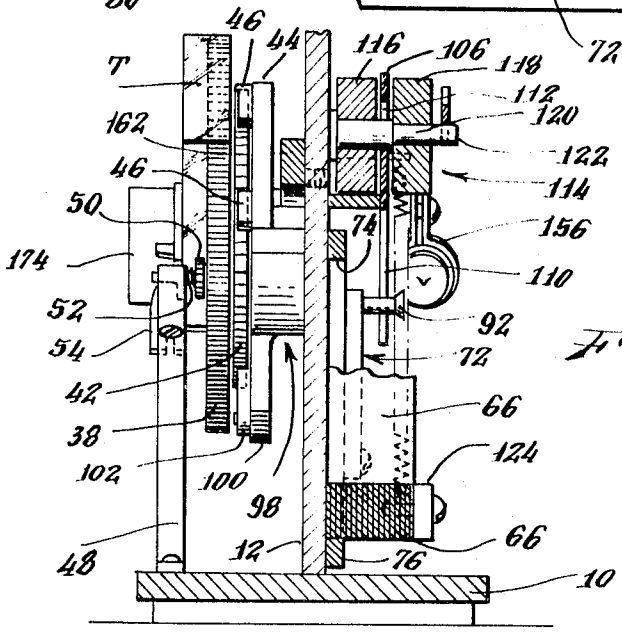

Fig. 6.

INVENTOR.

BY John H. Grosser

Wooster, Davis & Cipelli

ATTORNEYS.

SOLENOID-OPERATED DISPENSER FOR PRESSURE-SENSITIVE TAPE

BACKGROUND OF THE INVENTION

In U.S. Pat. No. 3,065,889 which issued Nov. 27, 1962 to applicant herein, there is disclosed a novel dispenser for pressure-sensitive adhesive tape. The dispenser disclosed in that patent employed a solenoid as a prime mover for advancing a toothed wheel by predetermined increments. The free end of a roll of pressure-sensitive tape on a rotatable supply roll passed around the periphery of the toothed wheel. The free end of the tape was grasped by the user and raised against a knife edge which severed the tape. The same movement actuated a trigger which initiated a time delay mechanism comprising a pivotable incline and a roller. The roller rolled down the incline and, upon impact with a mercury switch carrier, tilted the switch to actuate the solenoid. When the solenoid was energized, its plunger was retracted operating the feed wheel through a rack and pinion arrangement and returned the incline to its original position.

The invention disclosed in the foregoing patent was a considerable improvement over prior art dispensers in that it became possible to successfully feed predetermined increments of pressure-sensitive tape from a roll automatically and with accuracy. However, it has since been determined that certain improvements in the patented mechanism would be desirable.

One problem associated with the prior art dispenser arises from the fact that a solenoid is a rather abrupt and quick-acting mechanism. Since the dispenser operation was achieved on the energizing stroke of the solenoid, the direct linkage to the power source would occasionally cause the tape to snap or, in the case of a low tackiness adhesive, there would be a tendency to override. Another disadvantage arising from the same source was that the abrupt and violent action of the solenoid caused undesirable noise and vibration which might render it less attractive to purchasers. Another disadvantage was that the mercury switch was returned to its open position by means of a pivoted weight. This resulted in a wavering or vibration of the mercury in the tube causing the contacts to occasionally close. A further disadvantage was that, after a prolonged period of use an accumulation of adhesive would build up on the cutting edge of the knife. This resulted in a tendency of the tape to cling to the cutting edge.

Accordingly, it is a primary object of the present invention to provide an improved tape dispenser having a slower and more closely controlled action. Other objects are to provide such a dispenser which is quieter in operation; wherein the mercury switch is more positively retained in its "off" position; wherein the tape is more evenly dispensed; wherein the tape does not cling to the knife edge; and which is of simpler and more economical construction.

SUMMARY OF THE INVENTION

The objects of this invention are achieved by means of a dispenser for pressure-sensitive adhesive tape which includes means for rotatably supporting a roll of pressure-sensitive adhesive tape and feeding means spaced form the roll supporting means and arranged to draw tape off the roll by engagement with the tape. There is provided a solenoid including a plunger which is operable between a deenergized position and an energized position and includes means for normally biasing the plunger to its deenergized position. Driving means are positioned to advance the feeding means to draw a predetermined length of tape from the roll in response to the movement of the plunger from its energized to its deenergized position. Cutting means are provided against which a previously fed length of tape may be moved to effect severing. Triggering means are arranged adjacent the cutting means to be actuated by movement of the tape length toward the cutting means. Switch means are connected to energize the solenoid and a time delay means is provided for actuating the switch means a predetermined time period after actuation of the triggering means.

BRIEF DESCRIPTION OF THE DRAWINGS

The invention will be best understood by reference to the following description taken in conjunction with the accompanying drawings wherein:

FIG. 1 is a top view of a tape dispenser in accordance with this invention;

FIG. 2 is a left side view of the dispenser of FIG. 1;

FIG. 3 is a right side view of the dispenser of FIG. 1;

FIG. 4 is a front view of the tape dispenser of FIG. 1, portions thereof being broken away to illustrate the internal construction;

FIG. 5 is a cross section taken substantially along the line 5—5 of FIG. 3;

FIG. 6 is a cross section taken substantially along the line 6—6 of FIG. 2;

FIG. 7 is a partial view, similar to FIG. 2, illustrating the mechanism in one stage of its operation; and

FIG. 8 is a view, similar to FIG. 7, illustrating the mechanism in a further stage of its operation.

DESCRIPTION OF THE PREFERRED EMBODIMENT

The illustrated tape dispenser is a portable unit, the particular size of which may be varied to accommodate various size rolls of tape. It includes a supporting structure in the form of a generally rectangular flat base plate **10** and a flat vertically disposed support plate **12** which is rigidly secured to the base plate along its lower edge as by welding or the equivalent. To facilitate an explanation of the illustrated embodiment of the invention that portion of the dispenser which is disposed at the right-hand sides of FIGS. **1** and **2** will be designated as the front, and the portion at the left-hand sides of these figures will be referred to as the rear. Therefore, the vertical plate **12** extends from the front to the rear of the dispenser and generally separates the dispenser into two side portions **14** and **16**.

Side portion **14** generally includes the tape-feeding means, the tape-severing means, a portion of the control means, and a portion of the actuating means for the tape-feeding means. The side portion **16** generally comprises the remainder of the dispenser. Mounted against the support plate **12** on side portion **14** is an angled support block **18** positioned near the rear of the dispenser. Mounted in this block are a pair of spaced guide rods **20**, **22** which are parallel to one another and to support plate **12**. Slidably mounted on these guide rods is a carrier block **24** through which the guide rods extend and which is coupled to bracket **18** by means of a coil spring **26**. A support bracket **28** extends upwardly from carrier block **24** and a shaft **30** extends outwardly therefrom. A pair of nuts **32** retain, on the shaft **30**, a tape support disc **34** which carries a star-shaped hub **36**.

The tape-feeding portion of the dispenser comprises a toothed wheel **38** rotatably mounted on the end of a stub shaft **40** extending from support plate **12**. The toothed wheel **38** is spaced from the support plate **12** and is aligned with the hub **36** of tape support disc **34**. Fixed to the toothed wheel **38** on its innerside is a ratchet wheel **42** which is also spaced from support plate **12**. Mounted on support plate **12** is a pawl support bracket **44** carrying a pair of spring loaded pawls **46** which engage the ratchet **42**, as shown in FIG. **3**, to prevent its turning clockwise while permitting it to turn counterclockwise.

Mounted on the base plate **10** and angled forwardly and upwardly alongside toothed wheel **38** is a support bracket **48**. The bracket **48** is drilled at its upper end to rotatably receive the shaft of a small knurled wheel **50** which is lightly biased, by means of a coil spring **52**, against toothed wheel **38** (FIGS. **3** and **6**). The support bracket **48** also supports a guide shoe **54** in the form of a curved plate adjacent the forward edge of toothed wheel **38**, the guide shoe **54** being recessed to permit wheel **50** to rotate therein.

The manner in which the tape is loaded on the machine will be seen by reference to FIG. **3** wherein a standard roll **56** of cellophane tape is shown mounted on hub **36**, the tape T being

led forwardly over the top of, and in engagement with toothed wheel 38. The tape clings to the teeth of wheel 38 but its free end is released by means of the knurled wheel 50 and the guide shoe 54, as shown in FIG. 3. As will be apparent from FIG. 6, the tape T is approximately twice the width of toothed wheel 38, providing ample surface for it to be contacted by knurled wheel 50. Mounted on the forward end of support plate 12 is a substantially L-shaped tape severing device 58 which includes a substantially horizontal V-shaped knife portion 60 having a central point arranged to pierce and sever tape T when manually lifted against it.

It will be noted from FIG. 3 that support plate 12 is provided with a rectangular aperture 62 which receives a portion of a solenoid coil 64. Turning now to FIG. 2, the solenoid will be seen to be of relatively standard construction comprising, in addition to coil 64, a U-shaped laminated frame 66 and a retractable T-shaped plunger 68. The frame 66 is provided with spaced guide plates 70 for retaining plunger 68 and guiding it upon retraction into and withdrawal from coil 64. Fixed to plunger 68 and slidably mounted against support plate 12 is an actuating rack 72. The rack 72 includes an upper guide rail 74 and a lower guide rail 76. These guide rails are slidable relative to solenoid frame 66 and permit the actuating rack 76 to be retracted forwardly together with the solenoid plunger 68 upon energization of solenoid coil 64. Rack 72, however, is held in a normally rearward position by means of coil springs 78, 80, each of which is secured at one end to support plate 12 and at the other to one of guide rails 74, 76. Mounted on an upright bracket 82 at the rear of the dispenser is an air cylinder 84 having the usual air vent (not shown) at one end and a headed piston pin 86 extending from the other and normally biased outwardly by a coil spring 88. A pin 90 extends outwardly from solenoid plunger 68 and is normally retained against the piston pin 86 by means of the springs 78, 80. Another pin 92 extends laterally from the forward end of rack 72 for a purpose to be later described.

A vertical slot 94 is formed in the forward end of rack 72 and is arranged to overlie an arcuate slot 96 formed in vertical support plate 12. On the opposite side of support plate 12, mounted concentrically and rotatably with the ratchet wheel 42, is a drive yoke 98. The yoke is positioned between ratchet wheel 42 and support plate 12 as will be seen in FIG. 6 and includes a downwardly depending drive segment 100 carrying a pair of spring-loaded pawls 102 arranged to engage the teeth on the lower periphery of ratchet wheel 42. A drive pin 104 extends from the drive yoke through arcuate slot 96 and vertical slot 94, being retained therein by suitable means, such as a cotter key, which is not shown.

Referring now to FIGS. 1 and 2, there will be seen a rocker plate 106 which is pivotally mounted on support plate 12 by means of screw 108. A reset finger 110 extends downwardly from the rocker plate in line with pin 92. Rocker plate 106 defines a slot 112 which forms a track for a roller member 114. The roller member 114 comprises an inner disc 116 and an outer disc 118 joined by a shaft 120 (FIG. 6) which terminates at its end in a latching pin 122 extending axially from outer disc 118. A horizontal bracket 124 extends forwardly from the frame 66 of the solenoid and a coil spring 126 extends between bracket 124 and rocker plate 106 to exert on the rocker plate a force tending to rotate it clockwise about pivot screw 108. However, in the position illustrated in FIG. 2, rocker plate 106 is constrained from such rotation by a latch comprising a latch extension 128 which is engaged by a spring loaded latch pin 130 retained in a tubular housing 132 mounted on the side of support plate 12. A latch actuating rod 134 (FIG. 3) extends from latch pin 130 through a horizontal slot 136 formed in the support plate 12 and terminates in a cam rider 138.

Referring back to FIGS. 1 and 2 it will be noted that rocker plate 106 carries at its rear end an outwardly, laterally extending pivot pin 140. Rotatably mounted upon this pivot pin, by means of a sleeve 142, is a roller latch 144 including a forwardly extending finger 146 having a camming surface 148 and a latching recess 150 positioned to engage the latching pin 122 of roller member 114. A rearward extension of roller latch 144 carries an inwardly extending latch release arm 152.

Still referring to FIGS. 1 and 2, there is illustrated a mercury tip switch 154 mounted in a clamp 156 carried by a tilt plate 158 which defines an arc shaped camming portion 160 and is mounted on a shaft 161 extending laterally from support plate 12. A small permanent magnet 163 is mounted on a bracket 165 adjacent the forward edge of tilt plate 158.

REferring now to FIG. 3, it will be noted that an actuating lever 162 extends along support plate 12 from a pivot 164 at the rear of the dispenser. The upper edge of actuating lever 162 defines a notch having a forward camming portion 166 positioned against cam rider 138 and an upwardly extending finger 168 at its rear. The actuating lever 162 is curved downward at its forward end and secured thereto by means of screws 170 (FIG. 1) is an actuator having a forwardly extending arm 172 and a laterally extending actuator plate 174 which, as will be seen in FIGS. 3 and 4, extends across the front of the dispenser ahead of the end of tape T. Extending rearwardly from the actuator plate 174 is a leaf 176 from which depends a tape release plate 178.

Mounted just above the finger 168 of actuating lever 162 is a roller release trigger 180 mounted against support plate 12 by means of a pivot 182. A notch 184 is provided in the top of support plate 12 and through this notch extends a T-shaped member 186 which is mounted in vertical alignment with the latch release arm 152 of roller latch 144 (FIG. 1). The roller release trigger 180 is spring loaded downwardly against the finger 168 of actuating lever 162 by means of a coil spring 188.

OPERATION

The operation of the dispenser of this device is as follows: Assume first that the dispenser has been loaded with a roll of cellophane tape, as previously described, and that a prefed end of the tape T is positioned to be grasped by the user as shown in FIG. 3. As the end of the tape is pulled toward the front of the dispenser with a relatively sharp motion, it first engages the actuator plate 174 rotating the actuating lever 162 about its pivot 164. As the actuating lever 162 rotates clockwise, as seen in FIG. 3, the camming portion 166 forces cam rider 138 to the rear, thus retracting the latch pin 130 to release latch extension 128 of rocker plate 106. Simultaneously, the finger 168 raises the lower release trigger 180 so that the T-shaped member 186 is lifted to the position shown in FIG. 7. At this stage of the operation, the rocker plate 106 is tilted under the influence of spring 126 as shown in FIG. 7. However, the roller member 114 is retained at the top of the slot 112 by means of the latching recess 150 in roller latch 144. Simultaneously with this action the tape is forced against knife edge 60 and the end is severed. Severing of the end of the tape releases the forward end of the actuating lever 162 and it begins to return to its original position. As it does so, tape release plate 178 pushes the end of tape T free from knife portion 60. Finger 168 also releases the roller release trigger 180 and the T-shaped member 186 descends until it contacts latch release arm 152. This permits the roller latch 144 to rotate counterclockwise releasing the roller member 114. Roller member 114 now rolls downwardly in slot 112 and, after a short time delay, strikes the camming portion 160 of tilt plate 158 causing it to pivot clockwise to the position shown in FIG. 7 and causing the mercury switch 154 to close. The mercury switch is connected in series with the solenoid coil 64 and the latter is energized. The actual wires have been omitted from the drawings to simplify the showing.

Upon being energized, the solenoid retracts the plunger 68, causing the rack 72 to move forward as shown in FIG. 8. This also forces drive pin 104 forward and around the arcuate slot 96 causing the drive yoke 98 to be advanced as shown in FIG. 8. Pawls 102 thereupon engage new teeth on ratchet wheel 42. The forward motion of the rack 72 also carries with it pin 92

which forces reset finger **110** of rocker plate **106** forward, causing the rocker plate to rotate counterclockwise to its original position where it is retained by latch **128**. Roller member **114** returns to the left end of slot **112**, lifting camming surface **148** and is retained by latching recess **150**. The return of roller member **114** to its original position releases tilt plate **158** permitting the mercury switch **154** to return to its original position, the tilt plate then being retained by the magnet **163**. This causes the solenoid to be deenergized.

Springs **78**, **80**, which are in their stretched position, now retract the rack **72**, and in so doing, retract drive yoke **98** by means of drive pin **104**, causing pawls **102** to advance the ratchet wheel **42** a predetermined amount. As the ratchet wheel is mechanically integral with toothed wheel **38**, it also rotates, advancing a preselected length of tape. The free end of the tape is peeled away from the toothed wheel **38** by means of the knurled wheel **50** and the guide shoe **54**. As the plunger **68** of the solenoid is retracted to the rear, the pin **90** engages piston pin **86** of air cylinder **84**. The controlled release of air from the vent in the air cylinder cushions the shock of the returning rack **72** and quiets the operation.

It is believed that the manner in which this invention has achieved its objects will be apparent to those skilled in the art. It will be noted that the tape drive is actuated by the spring return of the solenoid rather than by the solenoid action itself. This provides a more controlled action, preventing snapping or overriding of the tape. It will also be noted that fewer parts are required than those of the prior patent heretofore referred to. Many modifications of this invention will suggest themselves to those skilled in the art. For example, air cylinder **84** may be replaced by a hydraulic cylinder or even by a bumper spring. Accordingly, the foregoing description is to be construed as illustrative only, rather than limiting.

I claim:

1. A dispenser for pressure-sensitive adhesive tape comprising: means for rotatably supporting a roll of pressure-sensitive adhesive tape; feeding means spaced from said roll-supporting means and arranged to draw the tape off the roll by engagement with the tape; a solenoid including a plunger operable between a deenergized position and an energized position; means for normally biasing said plunger to its deenergized position; driving means for advancing said feeding means to draw a predetermined length of tape from said roll in response to movement of said plunger from its energized to its deenergized position; cutting means against which a previously fed length of tape may be moved to effect severing thereof; triggering means adjacent said cutting means to be actuated by movement of said tape length toward said cutting means; switch means for energizing said solenoid; and time delay means for actuating said switch means a predetermined time period after actuation of said triggering means.

2. The dispenser of claim **1** further including means for absorbing the shock of said solenoid in returning to its deenergized position.

3. The dispenser of claim **2** wherein said shock-absorbing means is an air cylinder.

4. The dispenser of claim **1** wherein said feeding means comprises: a toothed wheel, said tape engaging said teeth; and a drive ratchet mechanically linked to said toothed wheel.

5. The dispenser of claim **4** wherein said feeding means further comprises a drive segment rotatably concentric with said ratchet and driven by said plunger, said drive segment including pawl means engageable with said ratchet upon movement of said plunger from its energized to its deenergized position.

6. The dispenser of claim **1** wherein said triggering means comprises an elongated lever pivoted at one end and having its other end positioned to be engaged and lifted by said tape upon manual lifting of the tape against said cutting means.

7. The dispenser of claim **6** wherein said time delay means comprises: a rocker plate normally latched in a first tilt position and biased toward a second tilt position and defining a track therein; roller means in said track; and a roller latch normally retaining said roller means at one end of said track.

8. The dispenser of claim **7** wherein lifting of said other end of said lever unlatches said rocker plate, causing it to tilt to its second position.

9. The dispenser of claim **8** wherein release of said other end of said lever releases said roller latch permitting said roller means to roll to the other end of said track.

10. The dispenser of claim **9** wherein said switch means comprises a tilt plate supporting a mercury tip switch and magnet means retaining said tilt plate in a normal switch open position, said tilt plate being positioned to be contacted by said roller means upon reaching said other end of the track and be pivoted to a switch closed position.

11. The dispenser of claim **6** wherein said other end of said lever includes a tape release plate positioned to disengage said tape from said cutting means upon release of said lever.

* * * * *