United States Patent

[11] 3,617,336

[72] Inventors Pierre Gilard
Mont sur Marchienne;
Maurice Galanti, Ransart, both of Belgium

[21] Appl. No. 733,929
[22] Filed June 3, 1968
[45] Patented Nov. 2, 1971
[73] Assignee Institut National Du Verre A.S.B.L.
Charleroi, Belgium
[32] Priority June 28, 1967
[33] Luxembourg
[31] 53973

[54] **DECORATIVE SURFACE RELIEF PATTERN**
8 Claims, 5 Drawing Figs.

[52] **U.S. Cl.** ..... **117/37,** 117/40, 117/124 A
[51] **Int. Cl.** **B44d 1/10,** C03c 17/10
[50] **Field of Search** ..... 117/37, 8, 102 FC, 105.3, 40, 124 A; 118/324 CC

[56] **References Cited**

UNITED STATES PATENTS

2,818,824	1/1958	Read et al.	117/8
3,046,839	7/1962	Bird et al.	117/37
3,218,496	11/1965	Jensen et al.	117/8
3,346,410	10/1967	McCarthy	117/37

Primary Examiner—Alfred L. Leavitt
Assistant Examiner—M. F. Esposito
Attorney—Edmund M. Jaskiewicz

ABSTRACT: A surface relief pattern to produce a decorative effect on an article wherein the surface is provided with a plurality of tapered protrusions with the protrusions having sloping surfaces. Corresponding sloping surfaces or portions thereof are provided with surface coatings which may be of different colors, different materials, different thicknesses or uncoated so as to produce dissimilar appearances between the sloping surfaces or portions thereof. In the method of forming this decorative effect the surface with the protrusions is passed through a free-falling film of surface coloring material so that heavier coatings of the material are formed on the sloping surfaces facing the direction of movement of the surface.

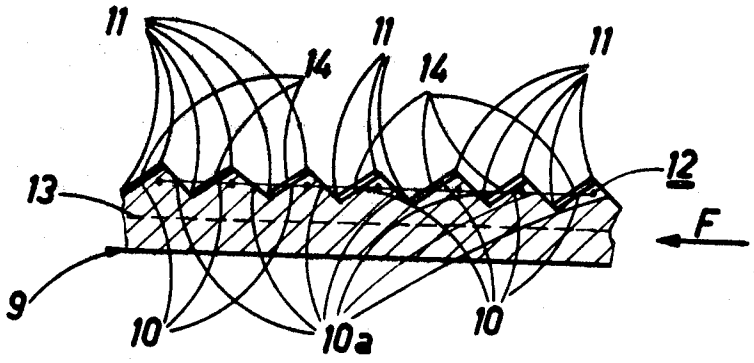

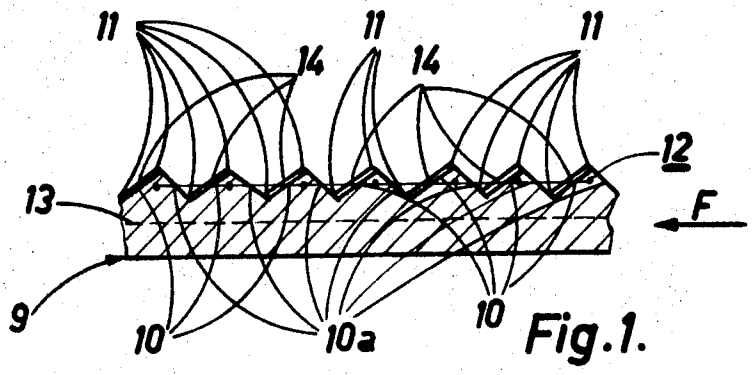

Fig.1.

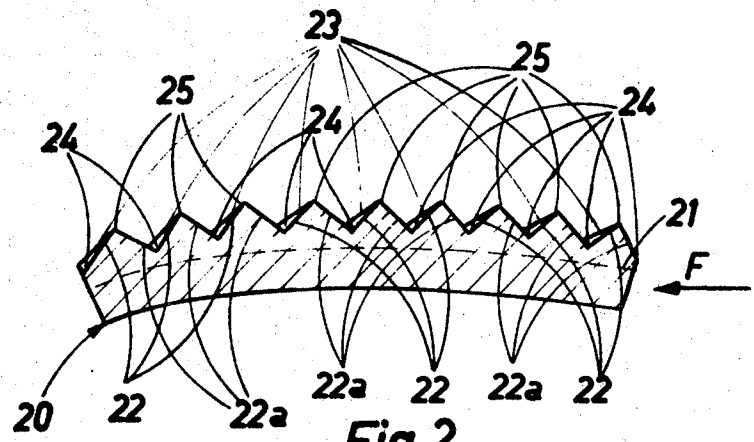

Fig.2.

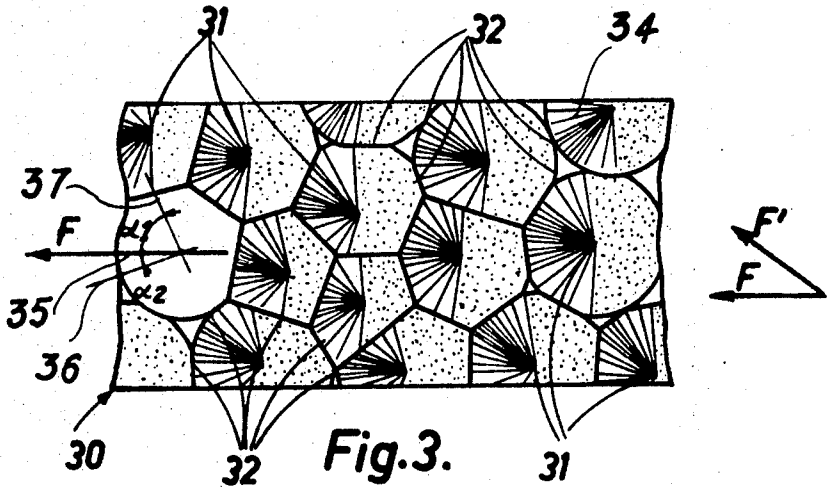

Fig.3.

INVENTORS
PIERRE GILARD
MAURICE GALANTI

BY Edmund M. Jaskiewicz
ATTORNEY

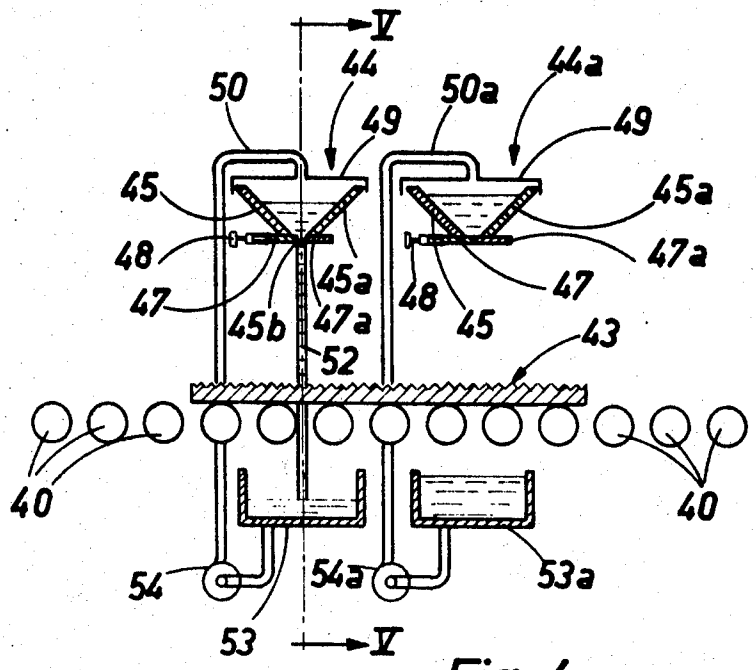

Fig. 4.

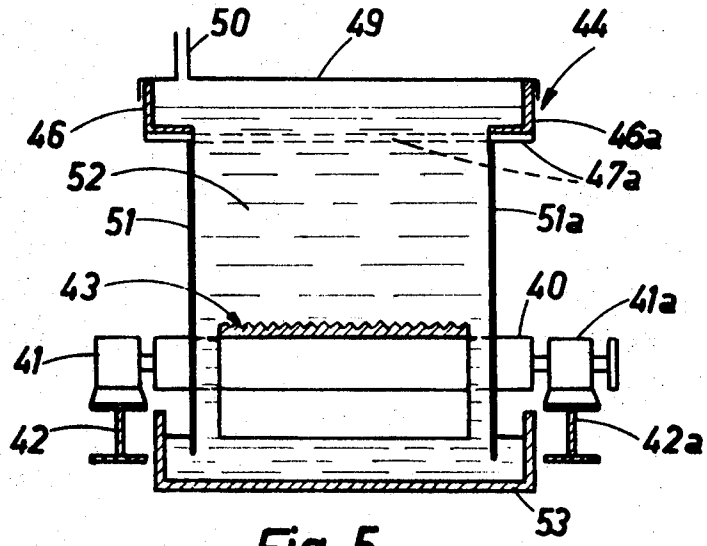

Fig. 5.

INVENTORS
PIERRE GILARD
MAURICE GALANTI

BY Edmund M. Jaskiewicz
ATTORNEY

DECORATIVE SURFACE RELIEF PATTERN

A wide variety of articles of many different materials and having various forms of surface relief patterns are presently commercially available. The relief patterns are intended in most cases to provide a decorative effect so as to enhance the appearance of the article. Such relief patterns can be formed in a number of ways, largely depending upon the material from which the article is formed. A mold or die may be used wherein the material of the article is initially shaped while in a liquid or plastic state. Such patterns can also be formed by a cold-forming treatment, such as by embossing or stamping for metallic articles. It is also possible to form such patterns by the assembly of various shaped components or pieces to result in a predetermined pattern on the article.

After the relief pattern has been formed on the article it is then desired in many cases to color the pattern so as to enhance the decorative effect on the article. Merely coloring the relief pattern, however, frequently detracts from the decorative effect since the contrast of the pattern may be decreased, particularly when the pattern is viewed from a distance. Various processes have been devised to apply a color uniformly to a surface relief pattern at a high rate of production. However, difficulties have been encountered in processes for decorating surface relief patterns with different colors or to produce contrasting appearances between different portions of the relief pattern.

In the mass production of articles the changing of the coloring agent during the production run is difficult and often impossible. Where articles are mass produced from synthetic plastics or glass the coloring agents may be introduced into the plastic or molten material which is then subjected to the forming operation. Once these coloring agents are introduced into a batch of the plastic or molten material the production cannot be modified at any time to produce articles of a different color since the batch of colored molten material must first be used up.

It is therefore the principal object of the present invention to provide a novel and improved decorative surface relief pattern for articles of manufacture and a process for producing such a decorative effect.

It is another object of the present invention to provide a surface relief pattern wherein different portions of the pattern have contrasting appearances through the use of colored surface coatings.

It is a further object of the present invention to provide a novel and improved method for applying colored surface coatings to a surface relief pattern to produce different decorative effects.

It is an additional object of the present invention to provide a process for coloring articles wherein the colors can be changed at any time during the production run.

The surface relief pattern for an article of manufacture according to the present invention essentially comprises a plurality of protrusions on a surface of the article with the protrusions tapering toward their tops or apices to define sloping surfaces on the protrusions. The protrusions may be substantially conical in shape or in the form of substantially V-shaped corrugations and may be closely adjacent each other or spaced therefrom. The decorative effect is achieved by a colored surface coating on corresponding portions of the sloping surfaces of the protrusions. The remaining portions of the protrusion sloping surfaces may be either uncoated, coated by a different coating material or coated by the same coated material but having a different thickness of material. As a result, the different sloping surface portions on the protrusions will have dissimilar and contrasting appearances. The surface coatings may be either uniform in thickness or may have a decreasing thickness from the bases to the tops of the protrusions.

When the protrusions are substantially conical in shape the sloping surfaces thereof may be divided into a plurality of sector-shaped portions extending from the tops to the bases of the protrusions. Each of these sector-shaped portions may have different colored surface coatings. Also where the protrusions

are substantially conical, the colored surface coating may decrease in thickness peripherally in both directions from a reference line extending from the top to the base of the protrusion on a sloping surface thereof. The reference lines of the plurality of protrusions may be substantially parallel.

The process according to the present invention produces a decorative effect on a surface having a plurality of tapered protrusions with sloping surfaces. This decorative effect is achieved by producing a free-falling film of a surface coloring composition. The surface having the protrusions is then passed through the falling film to form a colored surface coating on the sloping surfaces of the protrusions. Since the surface is moving unidirectionally through the film, a greater quantity of the surface coloring composition will be deposited on the sloping surfaces facing the direction of movement of the surface than on the other sloping surfaces. The surface with the protrusions may be passed through the film a number of times in different directions of movement. The film may comprise a differently colored composition for each pass of the surface therethrough.

By differentially coating a surface relief pattern according to the present invention the contrast of the pattern can be significantly increased when viewed from a distance. This contrast is achieved by completely covering the protrusions with a single coloring agent where the thickness of the agent is greater on one side of the protrusions as opposed to the other sides thereof. The contrast may also be achieved by applying different colored agents to the different sloping surfaces or to different portions of the sloping surfaces.

The article of manufacture having the surface relief pattern may be of any material and form such as flat or curved glass or plastics sheets, tubing and other forms of hollow articles, and panels and other articles made of wood or the like materials.

Other objects and advantages of the present invention will be apparent upon reference to the accompanying description when taken in conjunction with the following drawings wherein;

FIG. 1 is a vertical sectional view through an article having a surface relief pattern coated with a coloring agent according to the present invention;

FIG. 2 is a view similar to that of FIG. 1 but the article is a slightly curved sheet;

FIG. 3 is a top plan view of an article having a different form of relief pattern and colored in accordance with a modification of the present invention;

FIG. 4 is a longitudinal sectional view of an apparatus used for producing colored articles according to the present invention; and

FIG. 5 is a sectional view taken along the line V—V in FIG. 4.

Proceeding next to the drawings wherein like reference symbols indicate the same parts throughout the various views a specific embodiment and modifications of the present invention will be described in detail.

As illustrated in FIG. 1 the present invention is applied to an article of manufacture in the form of a flat rolled glass sheet **9** whose upper surface, as viewed in FIG. 1, is provided with a relief pattern. Such a glass sheet may be formed by flowing molten glass between two rollers with one of the rollers being provided with a surface pattern to form the relief pattern on a surface of glass sheet **9**.

The surface relief pattern comprises a plurality of closely adjacent protrusions **12** which are substantially in the shape of V-shaped corrugations each having a triangular cross section and extending substantially parallel with each other. The protrusions are tapered so as to form inclined or sloping surfaces **10** and **10a** which form intersections with each other **11** at the bottoms and tops of the protrusions. The intersections **11** can be either rectilinear or curvilinear.

The section of the glass sheet illustrated in FIG. 1 is in a plane which is perpendicular to the central plane of the sheet as indicated by the dashed line **13**. In order to apply the colored surface coatings to the relief pattern the sheet **9** is

moved in the direction indicated by the arrow F which lies in the plane of the section of FIG. 1. The sloping surfaces **10** which face in the direction of movement of the sheet **9** are coated by layers of paint **14** having a uniform small thickness. For reference purposes the sloping surfaces **10** may be said to have a positive slope when considered in terms of the trigonometric relationship. The other sloping surfaces **10***a* which can be considered to have a negative slope are not coated as shown in FIG. **1** or may have coatings which are considerably thinner in thickness than the coatings **14**. A sheet of glass which is thus coated with a coloring agent has a colored appearance which emphasizes the relief pattern but the glass sheet still retains its quality of being translucent.

In FIG. **2** there is illustrated a section of a bent acrilic plastic sheet **20** with the plane of the section being perpendicular to the mean surface of the sheet as indicated by the dashed line **21**. The sheet **20** is formed with a relief pattern similar to that of FIG. **1** and comprises tapered protrusions having bases **24** and tops **25** and sloping surfaces **22** and **22***a*. The sloping surfaces **22** which may be said to have a positive slope as described above are coated by layers of paint **23** with the thickness of the layers progressively decreasing from the bases to the tops of the protrusions. This varying thickness of the coloring agent strongly accentuates the contrast of the relief pattern and has been found to be particularly advantageous for a plastic material in which the relief pattern tends to become blurred when viewed from a distance. The blurring of the relief pattern is a result of the material being less transparent and is more apparent when the plastics sheet is of a considerable thickness.

In FIG. **3** the article comprises an aluminum sheet **30** stamped with a relief pattern comprising a plurality of substantially conical protrusions **31** variously spaced from each other to result in intersections **32** of varying lengths. The sheet **30** is coated with a layer of paint of a single color with the thickness of the paint layer varying in such a manner so as to emphasize the relief pattern.

To apply the paint the aluminum sheet **30** is moved in the direction of the arrow F through a film of free-falling paint. The paint will coat the sloping surfaces of the conical protrusions facing toward the direction of movement of the sheet. That portion of the sloping surface of a conical protrusion which will be painted lies on the left of a plane passing through the apex of the cone and perpendicular to the direction of movement F. There will be a series of these planes with each cone having its own reference plane as will be apparent from FIG. 3. The coating on the left sloping surfaces of the conical protrusions is indicated by the lines **34** extending from the apex to the base of each conical protrusion. However, the layer of paint deposited on the left-hand sloping surfaces of the conical protrusions is not of uniform thickness. The thickness of the layer of paint on each conical protrusion will decrease in both directions peripherally or laterally away from a reference line **35** on the sloping surface which extends from the apex to the base of each protrusion and is in the direction of movement F. Each conical protrusion will have a similar reference line with each of these reference lines being substantially parallel. As viewed in FIG. **3** the thickness of the layer of paint will decrease as the angle α increases from the reference line **35** of each protrusion. There are further illustrated in FIG. **3** at **36** and **37** two planes which are perpendicular to the aluminum sheet **30** and pass through the apex of the protrusion. The plane **36** forms an angle α_2 with reference line **35** and the plane **37** forms an angle α_1 with reference line **35**. The thickness of the paint coating on the sloping surface of the conical protrusion at the angle α_1 will be less than the sloping surface forming the angle α_2. It will be apparent that the thickness of the paint coating is the greatest along the sloping surface having an angle α equal to zero. The variation in thickness of the layer of paint on each conical protrusion is indicated by increasing the density of the lines **34** to represent the increase in thickness of the coating.

After coating the sheet in the manner as described above the sheet may be coated with a second layer of paint having the same color as the first layer but in this case moving the sheet in the direction F′ through the film of paint. To complete the coating of the aluminum sheet **30** with the same color of paint, the thickness of the paint layer to the right of vertical reference planes passing through the apices of the conical protrusions will be thinner than the minimum thickness of the paint layer deposited to the left of these reference planes. The entire aluminum sheet **30** will then have a uniform color but the relief pattern will be accentuated because of the variations in paint thickness.

While the above embodiments of the present invention have been described with respect to flat or semiflat articles, it is apparent that the present invention can be applied to other articles having circular or polygonal cross sections such as bottles, vases and other containers where the outer surfaces of the articles are partially or completely covered with one or more relief patterns.

In FIGS. **4** and **5** there is illustrated one form of an apparatus which can be employed for carrying out the present invention on the embodiments as described above. The apparatus comprises a conveyor formed by a series of rollers **40** journaled in bearings **41**, **41***a* mounted on longitudinal members **42**, **42***a* of the frame. The rollers **40** are driven by an electric motor (not illustrated) so as to move a sheet of rolled glass **43** at a high speed which is generally greater than 160 ft. per minute. Above the conveyor are two serially positioned reservoirs **44**, **44***a* for containing the liquid coloring agent. While only two reservoirs are illustrated it is apparent that the number will depend on the number of different colors of coloring agent to be used. By employing a separate reservoir for each different color it is unnecessary to empty and refill a reservoir with a different color of paint.

Each reservoir has sloping side walls **45**, **45***a* and a longitudinally extending slot **45***b*. The ends of the reservoirs are closed by end walls **46** and **46***a*. To close the slot **45***b* of a reservoir there is provided a movable flat bar **47** which cooperates with a fixed flat bar **47***a*. The bar **47** is positioned by means of adjusting screws **48** to vary the width of slot **45***b* which in turn controls the thickness of the film of paint dispensed from the reservoir.

The reservoirs **44** and **44***a* are enclosed by a cover **49** to which are connected pipes **50** and **50***a* through which paint is supplied to the reservoirs. Substantially rigid rods **51** and **51***a* are positioned at either end of the slot **45***b* to maintain the film of paint at its required width of the effect of surface tension. The width of the film of paint can be greater or smaller than the width of the article to be coated. Where the width of the film is smaller the rods **51** and **51***a* must be shorter than illustrated in FIG. **5** since the bottom ends of the rods must terminate at a level above the article **43** which is to be passed therethrough. Collecting tanks **53** and **53***a* are positioned beneath the reservoirs **44** and **44***a* to collect those portions of the paint film which are not intercepted by the sheet **43** or to collect the pain when there is no sheet positioned below the reservoirs. The paint collected in the tanks **53** and **53***a* is recirculated by pumps **54** and **54***a* back to the respective reservoirs **44** and **44***a*.

In order to operate the apparatus to coat an article, the initial step is to adjust the screws **48** in order to regulate the thickness of the paint film **42** dispensed by reservoir **44**. Since only the paint contained in reservoir **44** is to be used, the screws **48** are employed to close the slots **45***b* of all other reservoirs of the apparatus. The direction of movement for the sheet of glass **43** is then determined and the glass placed on the moving conveyor. The predetermined direction for the glass will coincide with the direction of movement of the conveyor **40**. As the glass sheet **43** passes through the film of pain **52** a portion of this film will be intercepted by the sheet of glass. The same sheet of glass **43** can be passed several times through the film **52** with each pass being carried out in a different direction. If desired, a film of a different color can be

used for each pass. Where a different color is to be employed the dispensing slot of a suitable reservoir is opened and all other slots are closed by manipulation of the adjusting screws 48.

The apparatus illustrated in FIGS. 4 and 5 can be also used for at least partially coating various containers, such as bottles, whose surfaces are formed with a relief pattern. The direction of movement of the article through the film may be a direction parallel with the axis of revolution of the container. In this manner the pattern on the upper portion of the container will be coated in the manner as described for the glass sheet 43. Where the direction of movement of the article does not coincide with that of the axis of revolution, the pattern will be coated only on that surface of the article or container in which the tangential lanes are close to the horizontal, assuming that the axis of revolution of the container is substantially parallel with the plane of the conveyor.

The various coatings illustrated in FIGS. 1–3 can be produced by the apparatus described herein by suitable variation of the following parameters: the speed of the conveyor, the thickness of the film of paint and the viscosity of the paint, and the pressure acting upon the surface of the paint in the reservoir. The pressure within each reservoir may be either atmospheric, above atmospheric or subatmospheric.

To facilitate further the comprehension of the present invention several specific examples of the process disclosed herein will be given.

EXAMPLE I

A sheet of rolled glass having a surface relief pattern substantially as illustrated in FIG. 1 was coated according to the present invention with a layer of blue paint applied by the apparatus illustrated in FIGS. 4 and 5. The paint had the following composition:

Chlorinated rubber	12%
Alkyd resin	7%
Boiled linseed oil	3%
Zinc chromate	25%
Filler	10%
White spirit	34%
Solvent	9%

The viscosity of the paint was 1.4 poise. The glass sheet was moved at a speed of 120 meters per minute through a film of paint dispensed through a slot 0.3 mm. in width. A pressure of 80 gr./cm.^{2} was applied to the surface of the paint in the reservoir.

Under these conditions the sloping surfaces **10** as illustrated in FIG. 1 where coated with a layer of paint having a substantially uniform thickness of 40 μ. The other sloping surfaces **10***a* were not coated with paint. The resulting product was thus as illustrated in FIG. 1.

Under the same conditions as in example I the thickness of the paint layer can be reduced by increasing the speed of movement of the glass sheet. When the glass sheet is moved at a speed of 180 meters per minute the thickness of the layer was reduced to 25 μ.

The type of coating illustrated in FIG. 2 wherein the thickness of the paint decreases from the base to the top of each protrusion can be obtained by varying the viscosity of the paint. The paint having the composition of example I can be reduced in viscosity to 0.85 poise by the addition of a diluting agent such as turpentine. A layer of paint having a progressively decreasing thickness as shown in FIG. 2 was deposited exclusively on the sloping surfaces **10** of the protrusions. Where the viscosity was further decreased, a layer of paint also appeared on the other sloping surfaces **10***a*. The thickness of the layer on sloping surfaces **10***a* also decreased progressively from the base to the top of each protrusion but was less in thickness than the paint on the sloping surfaces **10**. All other conditions were the same as described in example I for producing the coating shown in FIG. 1.

The results as described above applied to a sheet of rolled glass whose shape is substantially that illustrated in FIGS. 1 and 2 and to the paint having the composition of example I. It is apparent that the results will vary between different surface relief patterns and the kinds of paint used. In order to determine the optimum speeds, slot widths and viscosities for each particular relief pattern with respect to the kind of paint coating desired it is preferable to make preliminary tests on samples. It should be born in mind that the speed of movement of the relief surface primarily affects the thickness of the layer while the viscosity of the paint primarily affects the nature of the deposition of the paint namely, whether only corresponding sloping surfaces are painted, the coating of sloping surfaces away from the direction of movement, or varying thickness upwardly and/or laterally on the sloping surfaces. For example, the product illustrated in FIG. 3 can also be obtained by employing the apparatus of FIGS. 4 and 5 under suitable operating conditions.

The product of FIG. 3 can also be obtained by other processes such as by spraying. A specific example of spraying an aluminum sheet is set forth as follows:

EXAMPLE II

The aluminum sheet is positioned vertically and the surface with the relief pattern was sprayed with a semitransparent vitrifiable enamel. The composition of the enamel was as follows:

Mineral Phase			70%
Components:	SiO_2	47%	
	Na_2	13%	
	K_2O	5%	
	B_2O_3	15%	
	Al_2O_3	5%	
	F_2	4%	
	CaO	6%	
	Sb_2O_3	5%	
Oil-based organic phase and terpene solvents:			30%

The enamel had a viscosity of 1 poise and was sprayed manually with an atomizing gun. The amount of the enamel deposited was about 90 gr./m.^{2} of flat surface. After the sheet was sprayed, it was positioned vertically to permit the enamel to flow over the relief pattern. The sheet was then placed into a kiln at a temperature of 125° C. for firing of the enamel.

It is apparent that a first direction F was imposed upon the aluminum sheet by positioning the sheet vertically. If it is desired to coat the aluminum sheet with a second transparent enamel of a different color with the sheet being at a direction F′, the sheet would still remain in a vertical position but would be rotated within this vertical plane to the required angle and the spraying operation as described above then carried out.

Thus it can be seen that the present invention has disclosed a novel decorative effect for an article having a surface relief pattern with a coloring agent being applied to the relief pattern in a variety of ways to achieve contrasting or dissimilar appearances of the relief pattern when viewed close at hand or at a distance. The surface relief pattern may comprise a plurality of tapered protrusions with surface coloring materials on different portions of the sloping surfaces. All of the protrusions in the relief pattern need not be colored for example, some protrusions can be completely covered with a uniform layer of a coloring agent, some protrusions may be uncoated, or corresponding sloping surfaces of the protrusion may have coatings of different colors and different thicknesses.

The color of a sloping surface on a protrusion need not be uniform. A sloping surface may be divided in a plurality of adjacent sector-shaped portions extending from the tops to the bases of the protrusions where they are substantially conical in shape. Adjacent sector-shaped portions may either have different colors, the colors may be the same but of different thicknesses, or the colors of adjacent portions may merge into each other. It is not necessary however that the relief pattern

comprise conical protrusions. The protrusions may have cross-sectional areas with convex or concave sides and it is not necessary that the protrusions be symmetrical.

The method of modifying the visual effect of an article having a surface relief pattern comprising a plurality of tapered protrusions is carried out by passing the article through a free-falling film of a colored coating composition. The film of the coating agent may be formed by causing the agent to flow through a slot above the path of the article with the color agent flowing either by gravity or under a pressure. As the article passes through the free-falling film of coloring material, the characteristics of the coating on individual protrusions can be varied by modifying the speed of movement of the surface, the thickness of the falling film and the viscosity of the coating composition. As the article having the surface relief pattern moves through the film of coating composition, a suitably selected speed of movement of the article and viscosity of the coating composition will result in the coating composition being deposited only on the surfaces of the protrusions facing in the direction of movement of the article. If the forwardly facing surfaces are convex the thickness of the coating on the forward face of each protrusion will tend to decrease around this forward face from the zone on the sloping surface which first is contacted by the falling film. Depending on the speed of movement of the article, a shape of the protrusion and the viscosity of the coating composition, the outer portions of such forwardly facing surfaces may receive little or no coating composition. Depending on the shapes of the protrusions, it may be possible to coat the other or rearwardly facing surfaces of the protrusions in such a manner that the finished appearance of the coatings on the opposite sloping surfaces are different. This can be achieved merely by decreasing the speed of moving the article through the film of paint or by using a lower viscosity coating composition. Under these circumstances the thickness of the coating on the rearward sloping surfaces of the protrusions will be somewhat less than on the forward surfaces which directly encounter the falling film of coloring composition. Further, because of the taper of the protrusions, the coating tends to decrease in thickness from the foot to the top of each protrusion. It is apparent that by reducing the speed of movement of the article, the rearwardly facing surfaces of the protrusions can be coated directly by the free-falling film of coating composition. This decrease in speed of movement also has the effect of increasing the thickness of the coating.

The surface relief pattern can be colored by passing the surface two or more times through a film of the coating composition. The surface may be differently oriented with respect to the film for each pass therethrough. In addition, the composition of the coloring agent, viscosity or some other characteristics thereof may be different for each pass of the surface through the film. One sloping surface of the protrusions and then the other sloping surface of the protrusions can be coated by successive passes of the surface through the coating film. For each pass of the surface through the film, the surface may be pivoted through a small angle so as to coat adjacent portions of the protrusion surfaces during the successive passes.

While the present invention has disclosed the use of a free-falling film of coating composition, the coating may be applied by other methods such as by dipping, spraying or the like.

The composition of the coloring agent need not be limited to those disclosed herein but may comprise a wide variety of coating compositions including compositions which harden with or without heat, vegetable or mineral oil based paints, varnishes, lacquers, suspensions or solutions of coloring agents in liquid media and vitrifiable enamels which may be transparent, semitransparent or opaque.

It will be understood that this invention is subject to modification in order to adapt it to different uses and conditions, and, accordingly, it is desired to comprehend such modification within this invention as may fall within the scope of the appended claims.

What is claimed is:

1. A surface relief pattern for an article of manufacture and comprising a plurality of protrusions on an article surface and tapering toward their tops to define sloping surfaces on the protrusions, a colored surface coating on corresponding portions of the protrusion sloping surfaces, the remaining portions of the sloping surfaces being uncoated such that the different sloping surface portions have dissimilar appearances to provide contrast between the sloping surfaces, the coating on the sloping surface portion decreasing in thickness toward the tops of the protrusions.

2. A surface relief pattern as claimed in claim 1 wherein the colored surface coating decreases in thickness peripherally in both directions from a reference line extending from the top toward the base of the protrusion on a sloping surface thereof, the reference lines for the plurality of protrusions being substantially parallel.

3. A surface relief pattern as claimed in claim 1 with a plurality of adjoining sector-shaped portions on the sloping surfaces of said protrusions extending from the tops to the bases thereof, said sector-shaped portions having different colored surface coatings thereon.

4. A surface relief pattern as claimed in claim 1 with said surface coating being one of a paint and a vitrifiable enamel.

5. A surface relief pattern as claimed in claim 1 with said protrusions being on a glass surface.

6. A surface relief pattern for an article of manufacture and comprising a plurality of protrusions on an article surface and tapering toward their tops to define sloping surfaces on the protrusions, a colored surface coating on corresponding portions of the protrusion sloping surfaces, a second colored surface coating on the remaining portions of the sloping surfaces but said second surface being of a different color density then the other surface so that the different sloping surface portions have dissimilar appearances to provide contrast between the different surfaces.

7. A surface relief pattern as claimed in claim 6 wherein the remaining portions of the sloping surfaces are coated by a different coating material such that the different sloping portions have dissimilar appearances to provide contrast between the different surfaces.

8. A surface relief pattern as claimed in claim 6 wherein the remaining portions of the sloping surfaces are coated by the same coating material but with different thickness such that the different sloping surface portion have dissimilar appearances to provide contrast between the different surfaces.

* * * * *