DIFFERENTIAL PRESSURE TOOLS FOR PLUGGING HOLES IN WELL PIPE

Filed July 30, 1969 4 Sheets-Sheet 1

Fig. 1

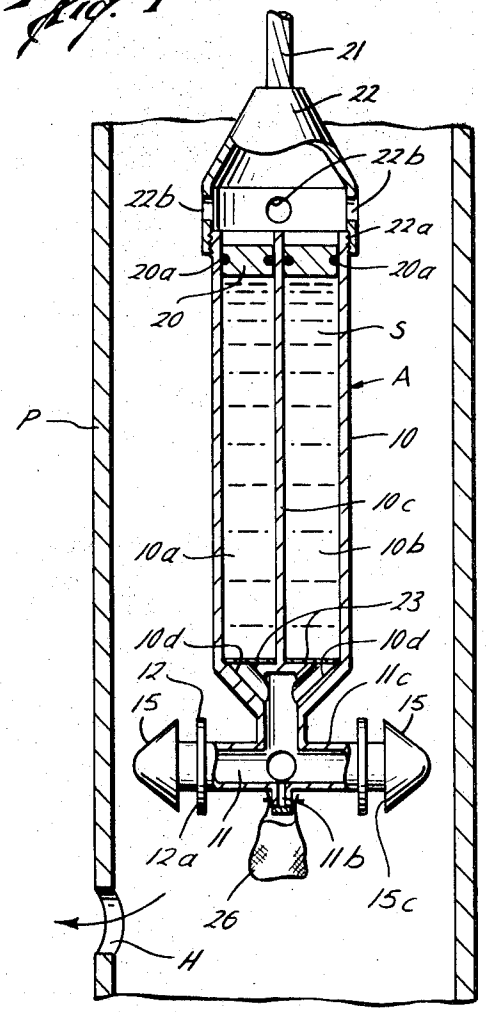

Fig. 2

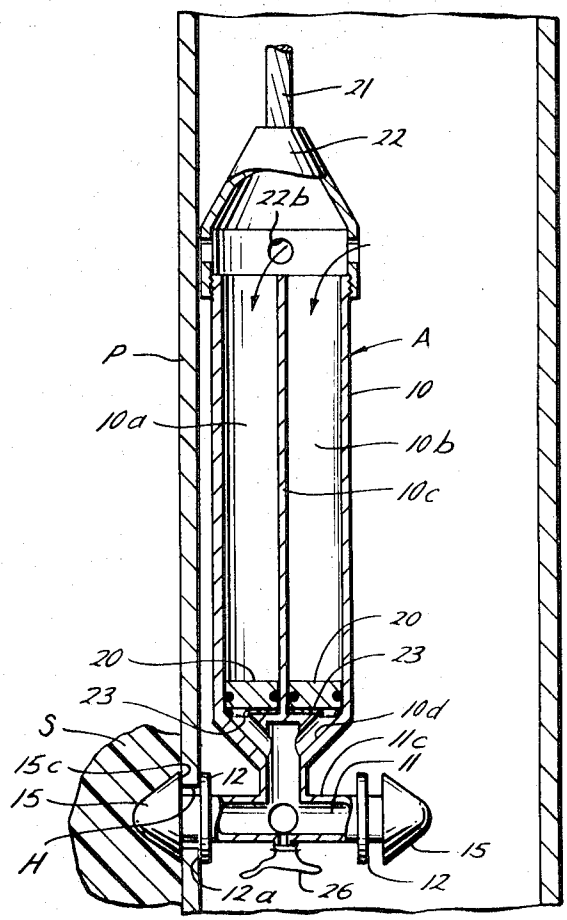

Fig. 3

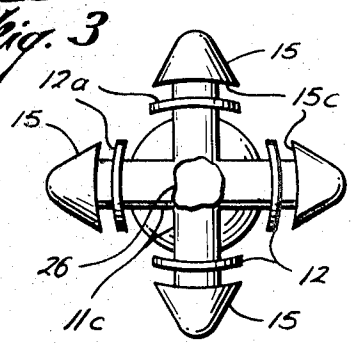

Fig. 4

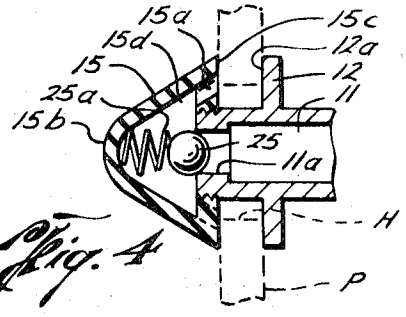

Lawrence K. Moore
INVENTOR

BY

Pravel Wilson & Matthews
ATTORNEYS

Oct. 26, 1971 L. K. MOORE 3,614,988

DIFFERENTIAL PRESSURE TOOLS FOR PLUGGING HOLES IN WELL PIPE

Filed July 30, 1969 4 Sheets-Sheet 1

Fig. 5

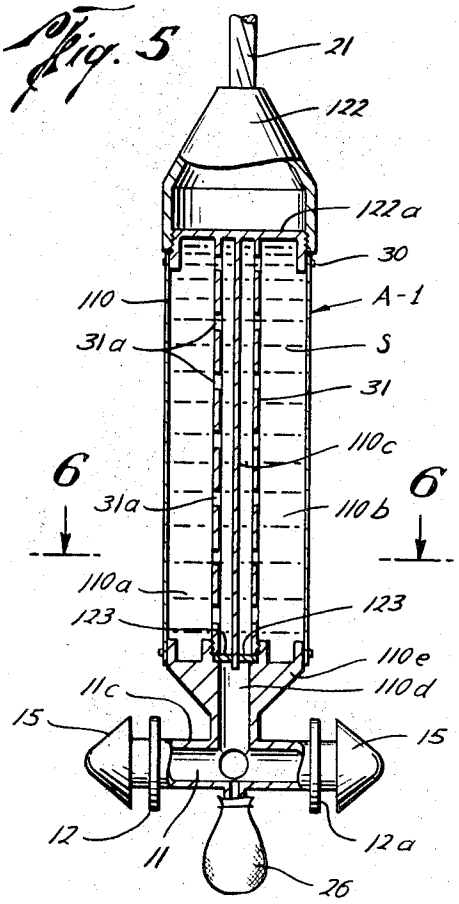

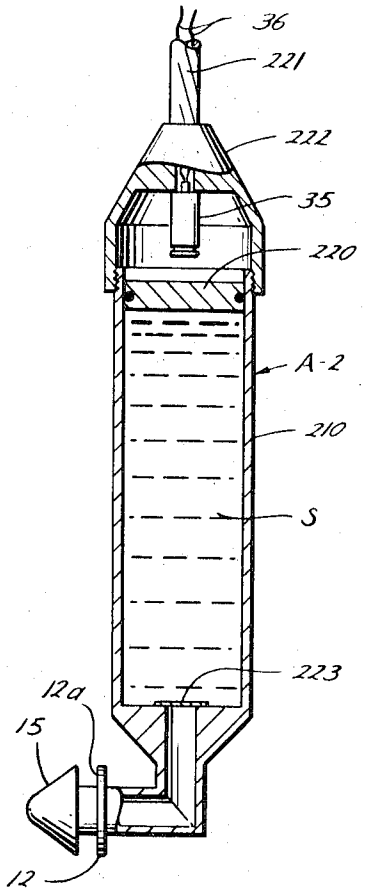

Fig. 7

Fig. 6

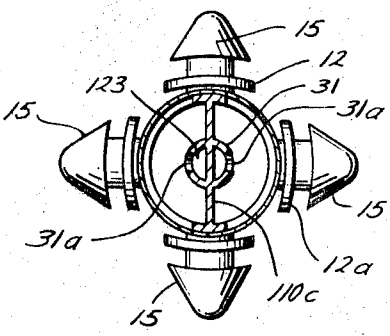

Lawrence K. Moore
INVENTOR

BY

Pravel Wilson & Matthews
ATTORNEYS

DIFFERENTIAL PRESSURE TOOLS FOR PLUGGING HOLES IN WELL PIPE

Filed July 30, 1969 4 Sheets-Sheet 3

Fig. 8

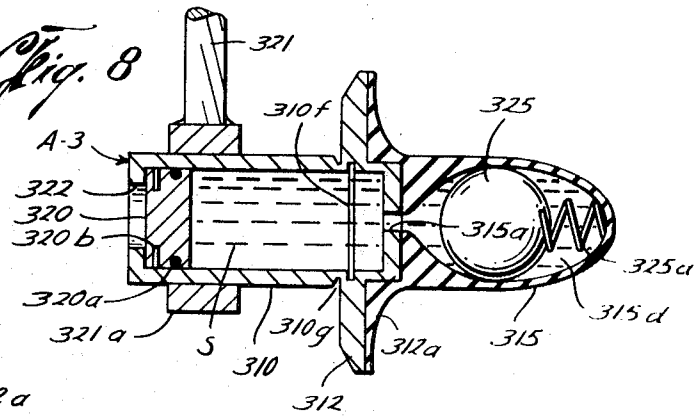

Fig. 9

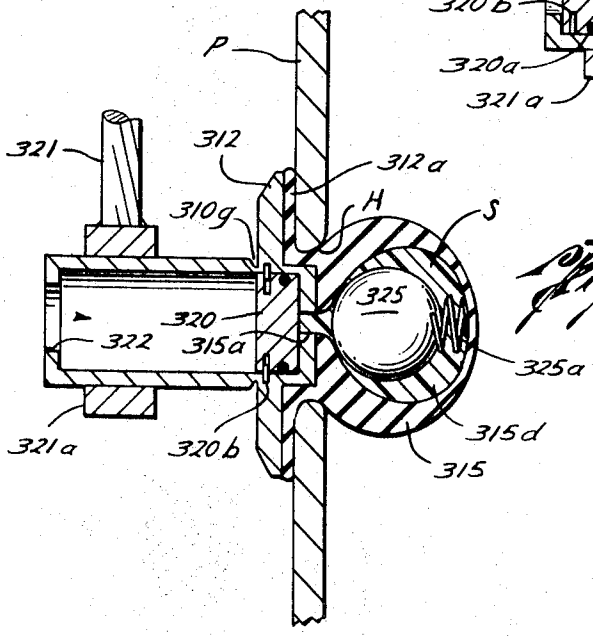

Fig. 10

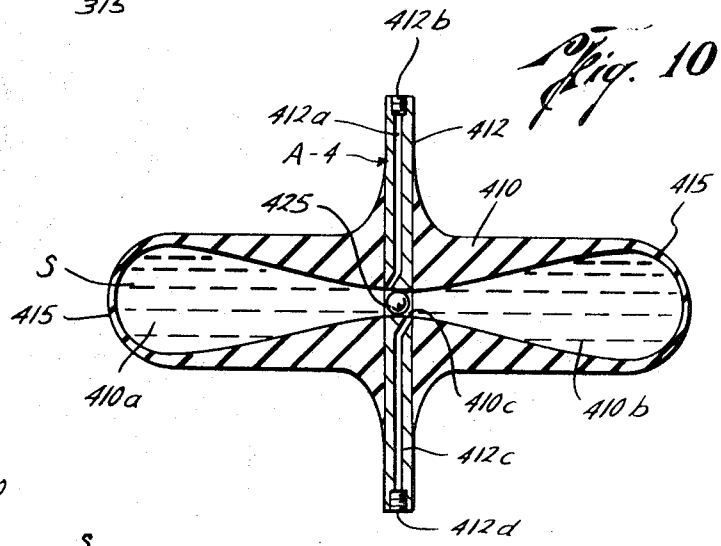

Fig. 11

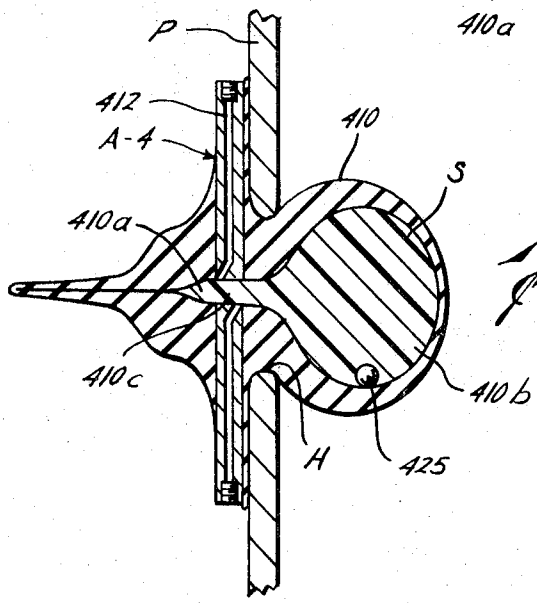

Lawrence K. Moore
INVENTOR

BY

Pravel Wilson & Matthews
ATTORNEYS

DIFFERENTIAL PRESSURE TOOLS FOR PLUGGING HOLES IN WELL PIPE

Filed July 30, 1969 4 Sheets-Sheet 4

Fig. 12

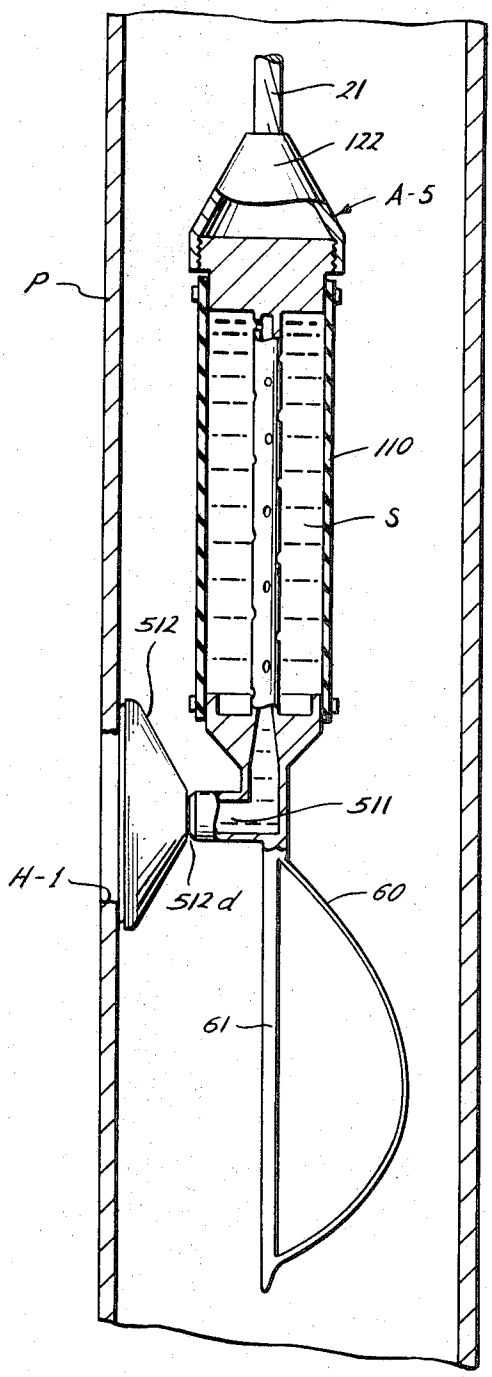

Fig. 13

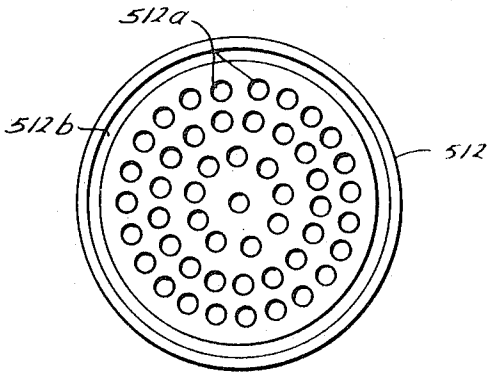

Fig. 14

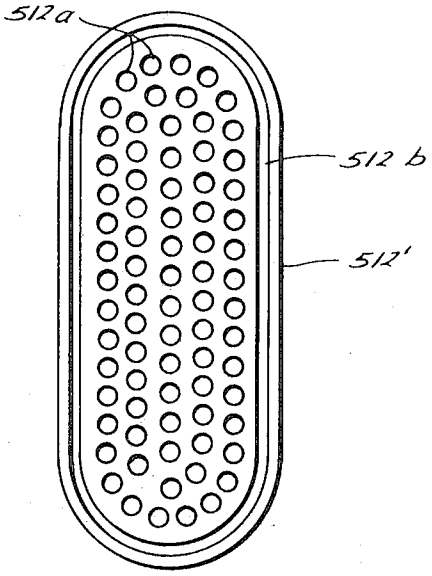

Lawrence K. Moore
INVENTOR

BY

Pravel Wilson & Matthews
ATTORNEYS

United States Patent Office

3,614,988

Patented Oct. 26, 1971

3,614,988

DIFFERENTIAL PRESSURE TOOLS FOR PLUGGING HOLES IN WELL PIPE

Lawrence K. Moore, 3716 Ingold, Houston, Tex. 77005

Filed July 30, 1969, Ser. No. 846,203
Int. Cl. E21b *33/13*
U.S. Cl. 166—193 15 Claims

ABSTRACT OF THE DISCLOSURE

Apparatus or tools for plugging or closing holes, cracks, or other openings in a casing or other well pipe, wherein fluid flow through the hole caused by a differential fluid pressure between the inside and the outside of the pipe is utilized for seating the apparatus over the opening, and for introducing closure material through the opening for forming a plug or closure therefor.

BACKGROUND OF THE INVENTION

The field of this invention is apparatus for sealing or patching holes or other openings in casing or well pipe.

There are many situations in which holes, cracks or other openings occur either intentionally or accidentally, in well casing or other well pipe. For example, the hole may occur because of an intentional perforation using conventional perforating apparatus, or the hole, crack or other opening may occur because of corrosion, a defect in the pipe or an unintentional puncturing of the pipe.

In the past, such openings in casing or well pipe have sometimes been patched with metal liners, such as illustrated in U.S. Pats. Nos. 3,167,122 and 3,191,677, but so far as is known, none have employed a sealing material in liquid or semi-solid form which later solidifies to effect a seal or closure. Apparatus has been developed which first perforates and then injects fluids through the perforations such as shown in U.S. Pats. Nos. 2,457,277 and 2,526,695, but none of such patents disclose the sealing of a hole in a pipe wherein a fluid pressure differential is used for the seating of the apparatus in the hole.

SUMMARY OF THE INVENTION

This invention relates to apparatus for sealing or closing a hole, crack or other opening in a well casing or pipe. With such apparatus, a fluid pressure differential between the inside and the outside of the pipe to be sealed is utilized for locating a part of the apparatus in contact with the well pipe adjacent to the opening, and closure material is introduced through the opening for forming a plug or closure therefor.

BRIEF DESCRIPTION OF THE DRAWING

FIG. 1 is a vertical sectional view, partly in elevation, of one form of the apparatus of this invention, illustrated in position in a well pipe or casing in proximity to a hole to be plugged or sealed using the apparatus of this invention;

FIG. 2 is a view similar to FIG. 1, but illustrating the apparatus with the hole in well pipe or casing plugged or closed;

FIG. 3 is a bottom view of the apparatus illustrated in FIG. 1;

FIG. 4 is an enlarged sectional view illustrating a portion of the apparatus of FIG. 1 in position in a hole in a well casing or pipe;

FIG. 5 is a vertical sectional view, partly in elevation, illustrating a modified form of the apparatus of this invention;

FIG. 6 is a sectional view of the apparatus of FIG. 5, taken on line 6—6 of FIG. 5;

FIG. 7 is a vertical sectional view, partly in elevation,

illustrating a further modification of the apparatus of this invention;

FIG. 8 is a vertical sectional view, partly in elevation, illustrating still another modification of the apparatus of this invention in the position it assumes during the lowering of same into a well pipe or casing;

FIG. 9 is a view similar to FIG. 8, but illustrating such apparatus in position in a hole in a well pipe or casing;

FIG. 10 is a vertical sectional view of another form of the invention, illustrating the apparatus in a position during the lowering or dropping of same in a well pipe or casing;

FIG. 11 is a view of the apparatus of FIG. 10 after the apparatus has moved into sealing position in a hole in a well pipe or casing;

FIG. 12 is a vertical sectional view, partly in elevation, illustrating another form of the invention in position adjacent an opening in a pipe or casing to be plugged or closed;

FIG. 13 is a side view of a portion of the apparatus of FIG. 12 illustrating the surface of the pipe engaging element adapted to be positioned adjacent the opening in the pipe which is to be plugged or closed;

FIG. 14 is a view similar to FIG. 13, but illustrating the pipe engaging element of FIG. 12 in a different shape from that of FIG. 13.

DESCRIPTION OF THE PREFERRED EMBODIMENTS

In the drawings, the letter A designates generally one form of the apparatus of this invention which is particularly illustrated in FIGS. 1–4. The apparatus A includes a receptacle **10** for holding a sealing material S. The receptacle **10** is in fluid communication with a mixing chamber **11** which forms a passageway through a pipe engaging element **12** having a sealing surface **12***a* for sealing engagement with the inside of the well pipe P surrounding an opening H. A flexible head **15** is mounted outwardly of the pipe engaging element **12** and such head **15** is adapted to be deformed or flexed enough to pass through a hole or other opening H in the well pipe or casing P. Briefly, the receptacle **10** is provided with means such as pistons **20** which are adapted to be actuated by fluid pressure or other suitable pressure to force the sealing material S from the receptacle **10** and outwardly therefrom through suitable outlets **15***a* in each flexible head **15** for depositing the sealing material S externally of the pipe P adjacent the hole H (FIG. 2) to thereby provide a closure or seal upon the hardening or solidifying of same to prevent further flow of fluids through the hole H.

Considering the invention more in detail, the apparatus A may be lowered into the casing or well pipe P on a conventional wire line **21** or cable or any other suitable support. As illustrated in FIG. 1, the wire line or other support **21** is connected to a cap **22** which is threaded at **22***a* or is otherwise connected to the upper end of the receptacle **10**. One or more openings **22***b* are provided in the cap **22** for establishing communication between the exterior of the receptacle **10** and the area at the upper end of such receptacle **10**.

The receptacle **10** is preferably divided into two compartments **10***a* and **10***b* by means of a central separator or partition **10***c* so that when the sealing material S is formed of two or more components, the components may be kept separated from each other until it is desired to mix same and inject them into the hole H. Each of the compartments **10***a* and **10***b* has a piston **20** disposed therein with an annular seal ring **20***a* formed of rubber or other suitable sealing material therewith.

Each of the chambers **10***a* and **10***b* has an outlet or discharge opening **10***d* which establishes communication from the compartments **10***a* and **10***b* to the mixing chamber **11**

therebelow. The passages **10***d* are temporarily closed by disks **23** which are made of relatively thin aluminum, plastic, or any other material which is capable of being ruptured or punctured by the application of pressure thereto when the piston **20** moves downwardly in the receptacle **10**, as will be more evident hereafter. The disks **23** thus keep the two compartments **10***a* and **10***b* isolated from each other so as to maintain the components of sealing material S therein separated from each other until it is time to mix same together for injection into the holes H. By way of example, the sealing material S may be an epoxy resin and therefore each of the common components thereof are kept separated in the two compartments **10***a* and **10***b* so as to maintain same in a liquid form until it is desired to inject them into the hole H where they become solidified due to their mixing and chemical reaction.

In the form of the invention illustrated in FIGS. 1–4, there are a plurality of the flexible heads **15** (FIG. 3), the number of which may vary. In some instances, only a single flexible head **15** is employed, but usually, a plurality of such flexible heads **15** are employed since it facilitates the movement of one of the heads **15** into the hole H to be plugged, as will be more evident hereafter.

Each of the flexible heads **15** is preferably constructed as illustrated in detail in FIG. 4. The flexible head **15** may be formed of rubber or a flexible plastic such as polyethylene or any other suitable material which is capable of being deformed sufficiently to pass through the hole H. It is to be noted that the flexible head **15** is substantially conical, but it has a rounded nose **15***b* and the diameter of the rounded nose **15** is smaller than the diameter of the hole H into which such head **15** is intended to be inserted. On the other hand, the base **15***c* of the head **15** is of a greater diameter than the diameter of the hole H so that the flexible head **15** must be compressed or squeezed down to a smaller diameter to enable the base **15***c* and the other parts of a larger diameter than the hole H to pass through the hole H in moving from the position shown in FIG. 1 to that shown in FIGS. 2 and 4. Therefore, when the head **15** reaches the position shown in FIGS. 2 and 4, the base **15***c* re-extends itself due to the flexibility of the material of the head **15** so that the base **15***c* prevents or resists a return or withdrawal of the head **15** through the hole H. The space between the base **15***c* and the inner surface **12***a* of the pipe engaging element **12** is substantially equal to the thickness of the pipe P in the vicinity of the hole H so that when the head **15** has passed through the hole H, the apparatus is essentially locked in position adjacent the hole H as shown in FIGS. 2 and 4.

A one-way check valve **25** which is urged to a closed position by a spring **25***a* serves to permit the discharge of the sealing material S from the mixing chamber **11** through a port **11***a* into the interior **15***d* of the head **15**, but it prevents the flow of fluid inwardly from the interior **15***d* of the head **15** into the mixing chamber **11**. The sealing material is discharged for the interior **15***d* of the head **15** through an outlet opening or openings **15***a* in the base **15***c* of the head **15** so that such sealing material is deposited in the hole H and externally of the pipe P to form a mass around the element or head **15** and over the hole H so that upon the hardening or solidifying of the material S, a plug or seal is provided for the hole H.

To equalize the pressure acting upon the upper and lower ends of the compartments **10***a* and **10***b* and therefore, the sealing material S therein, a flexible equalizing bag **26** is secured below the mixing chamber **11** and is in communication therewith through a port **11***b*. Thus, when the apparatus A is lowered into a well pipe P having a fluid therein, the pressure acting on the pistons **20** will increase at the increasing depth of the liquid in the pipe P. Essentially the same pressure will also be acting upon the flexible bag **26**, whereby there is an equalization of pressure on the sealing material S during the lowering and/or raising of the apparatus A in the fluid within the well pipe P.

In the operation or use of the apparatus A of this invention, the apparatus A is lowered in the well pipe P on the wire line **21** or other suitable support. The approximate depth of the hole H is known in advance so that the apparatus A is first lowered to a point in proximity to such elevation and is preferably lowered below the hole H. During the lowering of the apparatus or tool A, fluid, such as water or drilling fluid, is pumped from a conventional pump downwardly through the well pipe P and outwardly through the hole H to the area externally of the pipe P. A fluid pressure differential thus exists or is created between the interior of the pipe P and the area externally thereof, the extent of which depends upon the pumping pressure and well fluid conditions. It is also possible to use a gas instead of a liquid for creating such differential pressure, and as used herein, the term "fluid" includes either a liquid or a gas for such operation. The operator notes the reading on the fluid pressure gauge at the surface during the lowering of the apparatus A so that he can compare it with subsequent readings, as will be explained.

The apparatus or tool A is moved downwardly to a point below the hole H and then is moved slowly upwardly to a point above the hole H until one of the flexible heads **15** comes close enough to the hole H to be forced therethrough by the fluid being pumped through the hole H. Since the pressure internally of the pipe P is greater than the pressure externally thereof, the fluid is flowing outwardly through the hole H at a relatively high velocity, so that the fluid velocity acts to force the element **12** towards the hole H to cause the surface **12***a* to seat around the hole H and close off all or substantially all fluid flow through the hole H. It is to be noted that the sealing surface **12***a* preferably conforms to the curvature of the inside wall of the pipe P (FIG. 3). The closest head **15** to the hole H is also caused to move towards same and once the head **15** is in engagement with the hole H, the differential in pressure then acts against the pipe engaging element **12** and the other substantially vertically extending surfaces to force the head **15** through the hole H.

If only one of the heads **15** is employed on the apparatus A, the apparatus A may have to be turned or rotated as it is being raised and lowered to position the head **15** close enough to the hole H to enable the flowing liquid to force same through the hole H. However, where there are a plurality of such heads **15** as shown in FIGS. 1, 2 and 4, the chances of one of such heads **15** entering the hole H are increased sufficiently so that very little movement in a rotational direction, if any, is required from the surface.

When the member **15** has been forced through the hole H to the position shown in FIGS. 2 and 4, the operator at the surface will know that this has occurred in two ways. First, the weight indicator on the wire line **21** will show a change in the weight reading, the extent of which will depend upon whether the tool was being raised or lowered when a head **15** was forced through the hole H. Also, the pressure gauge for the fluid being circulated inside of the pipe P will show an immediate increase in pressure since the flow of the fluid through the hole H has been cut off or substantially cut off by the contact of the pipe engaging element **12** with the inside surface of the pipe P. In any event, when one or both of the above indicators are noted by the operator, the movement of the wire line **21** by the operator is stopped and the pressure is allowed to reach a predetermined amount as indicated by the pressure gauge.

In the form of the invention illustrated in FIG. 1, the fluid within the pipe P then serves to force the sealing material S outwardly from the receptacle **10** through the single head **15** which has been inserted into the hole H. The sealing material S is forced downwardly by the pistons **20** which are forced downwardly by the fluid pres-

sure acting thereon so as to initially rupture the disks **23**. The sealing material S then flows through the passages **10***d* into the mixing chamber **11** where it is mixed together. It should be noted that the mixing chamber **11** is preferably initially filled with a liquid such as a cleaning fluid or acid, and the bag **26** is preferably filled with the same liquid. The bag **26** collapses (FIG. 2) when the head **15** enters the hole H since the pressure internally of the pipe P is greater than that externally of the pipe P. The cleaning liquid or acid is forced out through the ports or outlets **15***a* of the single head **15** which is positioned through the hole H as the sealing material S is forced downwardly into the mixing chamber **11**. The cleaning agent or acid tends to clean the area around the head **15** in the hole H in advance of the distribution of the sealing material S around such head **15** to thereby provide a clean area for the epoxy resin or other sealing material to accumulate for subsequent hardening. It should be noted that the heads **15** which do not go through the hole H remain closed as the sealing material S is forced outwardly through the head **15** which is in the hole H because those heads **15** which are still in the pipe P are subjected to the same pressure externally thereof as the pressure being exerted on the sealing material S. Since the pressure internally and externally of such heads **15** in the pipe P is thus substantially the same, the spring **25***a* in conjunction with each of the ball valves **25** for such heads **15** keeps the ball valves **25** closed. However, as to the head **15** which has been inserted into the hole H, the spring **25***a* is not sufficiently strong to prevent the sealing material S from forcing the ball **25** against the spring **25***a* and then forcing the sealing material S outwardly through the outlets **15***a*.

The tool A is left in position a sufficient time to permit the sealing material S to harden or solidify into a mass forming a seal or plug such as illustrated in FIG. 2. The particular length of the time required will depend upon the type of resin or other material employed.

After the sealing material S has solidified, the apparatus A may be released from the head **15** and its pipe engaging element **12** which are disposed in the hole or adjacent to the hole H. To effect such release, the wire line **21** is manipulated, using conventional jars, weights, or other means in any known manner for applying a severing force to the tube **11***c* of the mixing chamber **11**. The external surface of the tube **11***c* may be scored or otherwise provided with a break point to facilitate the breaking of same at a particular spot inwardly of the element **12**. During the manipulation of the wire line **21**, or the other action thereon for effecting a shearing of the tool A from the part which is in the hole H, it is preferable to leave or maintain the pressure of the fluid within the pipe P to facilitate the holding of the element **12** and the parts outwardly therefrom in the hole H, or adjacent to such hole H. After the tool A has been retrieved, it may be repaired or the parts replaced by any suitable means for a subsequent operation using the same tool A.

The operator will know at the surface of the well that the sealing material S has properly and completely plugged the hole H because the pressure of the fluid within the pipe P will remain the same. If the hole H has not been properly plugged, the pressure of the fluid in the pipe P will gradually drop off. The pressure of the fluid within the pipe P may either be released or maintained while the tool is being retrieved to the surface.

The effectiveness of the closure or seal S may also be tested from externally of the pipe P by developing a pressure externally of the pipe P which is greater than the hydrostatic pressure within the pipe P, and such testing can be effected in any known manner.

In FIG. 5, a modified apparatus A–1 is illustrated wherein the parts which are similar to those of FIG. 1 have the same letters and/or numerals. The receptacle **110** of the apparatus A–1 is formed with a flexible wall or cylinder of rubber, plastic or other similar material.

The cap **122** is preferably the same as the cap **22** of FIG. 1 except that it does not have the openings **22***b*. The cap **122** is preferably connected to a closure plate **112***a* which is threaded thereto and which has the upper end of the receptacle **110** secured thereto by a wire **30** or other suitable attaching means. A partition **110***c* extends downwardly from and is preferably integral with the closure **122***a* so as to divide the receptacle **110** into compartments **110***a* and **110***b*. Also, a perforated cylinder or tube **31** having openings **31***a* spaced longitudinally throughout its length is disposed near the center of the receptacle **110** (FIG. 6), and such tube or cylinder **31** is preferably also secured or is formed integrally with plate **122***a*.

The lower end of the receptacle **110** is preferably formed with a lower section **110***e* which has a single port **110***d* in communication with the area inside of the tube **31**, on both sides of the separator plate **110***c*. The section **110***e* is preferably formed integrally with the tubes **11***c* forming the walls for the mixing chamber **11** and leading to each of the pipe engaging elements **12** and the flexible heads **15**. The flexible bag **26** is disposed below the mixing chamber **11** in the same manner as described heretofore in connection with **21**.

Semi-circular sealing disks **123** are disposed on each side of the separator plate **110***c* near the bottom of the tube **31** for maintaining the sealing material S separated from cleaning fluid or acid within the mixing chamber **11**, passage **110***d*, and the flexible bag **26**, until such disks **123** are ruptured.

The operation or use of the form of the invention A–1 illustrated in FIGS. 5 and 6 is substantially the same as that illustrated in FIG. 1–4 except that the sealing material S is forced outwardly from the receptacle **110** by the collapsing of the wall of the receptacle **110** to force the contents thereof through the opening **31***a* and then downwardly into the mixing chamber **11** and outwardly through the flexible head **15** which has been forced into a hole such as a hole H illustrated in FIG. 2. The ports **31***a* permit the sealing material S which is in liquid form to move therethrough, but since the tube **31** is spaced from the separator plate **110***c* as thus seen in FIG. 6, the collapsing of the wall of the receptacle **110** cannot result in cutting off the discharge of substantially all of the contents of the receptacle **110** through the discharge opening **110***b*. When the sealing material S is an epoxy resin which has its two components separated, each of the components will be in one of the compartments **110***a* or **110***b*, but it will be appreciated that if the material S is a liquid or a semi-liquid material which is a single component and which sets by dehydration or other means after being discharged from the apparatus A–1, it is not necessary to include the separator **110***c* or the disks **123**. The tube **31** might also be eliminated in such instance.

In FIG. 7, another form A–2 of the apparatus is illustrated wherein the receptacle **210** has a single compartment with the sealing material S being a single component material. For example, the sealing material S may be an expandable cement slurry, a silicone rubber, or any other material which is in a liquid or a substantially liquid form in the receptacle **210** and which solidifies after being discharged through the flexible head **15** by dehydration, drying, or curing externally of the pipe P. It will be appreciated that the single component sealing material S may be used in the other forms of apparatus illustrated in this invention, and of course, it should also be understood that the multi-component sealing material of FIGS. 1 and 5 may be used in the apparatus of FIG. 7 by providing a separator therein in essentially the same manner as illustrated in FIG. 1. The piston **220** is a single piston in the form shown in FIG. 7, and a single disk **223** is preferably provided. Only a single sealing head **15** may be employed with the apparatus of FIG. 7, although a plurality of such heads **15** such as illustrated in FIGS. 3 and 6 may be employed in the FIG. 7 form of the inven-

tion if so desired. The ball valve **25** is preferably omitted from the form of the invention shown in FIG. 7, in which case the flexible bag **26** is also omitted. The discharge or forcing of the sealing material S outwardly through the flexible head **15** after it has been positioned in a hole H in a pipe P in the same manner as illustrated in FIG. 2, is accompanied by firing an explosive **35** above the piston **220**. The explosive is a shotgun shell or other powder which is detonated by an electrical spark from electrical wires **36** which extend to the surface of the well and are connected with a suitable source of electrical voltage for creating the spark to ignite the explosive. The cap **222** is closed so that the fluid does not enter the area above the piston **220**, whereby the explosive **35** is kept dry at all times.

The operation of the apparatus of FIG. 7 is essentially the same as that illustrated and described in connection with FIGS. 1–4, except that the force of the explosion from the explosive **35** is utilized for causing the piston **220** to force the sealing material S downwardly and out through the openings in the flexible head **15** instead of using the fluid pressure differential within the well pipe. Thus, the apparatus A–2 is especially useful when the differential pressure in a well pipe is insufficient to force the sealing material S outwardly into the area externally of the pipe P. This might occur when the well formation pressure externally of the pipe P is high and therefore difficulties are encountered in developing a sufficient differential fluid pressure to drive the sealing material S outwardly. It should be noted that since the apparatus A–2 preferably has only a single flexible head **15**, the support **221** preferably is a wire line which has a rotating tool of known construction thereabove (not shown) for rotating the apparatus A–2 during the raising and lowering of same to thereby facilitate the insertion of the head **15** into the hole H.

The form of the invention illustrated in FIGS. 8 and 9 is designated A–3 in the drawings. Such apparatus A–3 has a receptacle **310** having a flowable material S therein which may together with the fluid in the head **312** form a compound that hardens. A piston **320** is disposed in one end of the cylinder or receptacle **310**, and such piston **320** is exposed to the fluid pressure in the well pipe P through an opening **322**. The piston **320** has an O-ring **320*a*** and a resilient snap ring **320*b*** therewith. The resilient snap ring **320*b*** slides along the inside surface of the cylinder or receptacle **310** until the snap ring **320*b*** is opposite an annular groove **310*f*** in the inside wall of the receptacle **310**. At that point, the snap ring **320*b*** is adapted to expand by the resiliency of the material of the snap ring **320*b*** and it enters the groove **310*f*** so as to thereafter lock the piston **320** in the innermost position within the cylinder or receptacle **310** (FIG. 9). The pipe engaging element **312** corresponds with the pipe engaging element **12** of FIG. 1, and it preferably includes a resilient layer **312*a*** of rubber, plastic or other material which forms the surface for contacting the inner surface of the pipe P (FIG. 9). The layer of material **312*a*** may be formed integrally with the flexible head **315** which has a hollow interior **315*d*** and which is in fluid communication with the receptacle **310** through an opening **315*a***. A ball **325** together with a spring **325*a*** are disposed in the flexible head **316** so that if a part of the material S is to be separated from the other part, the ball **325** serves as a separator, whereby one component may be in the receptacle **310** and the other component may be in the interior **315*d*** of the flexible head **315** (to the right of the ball **325** as viewed in FIG. 8).

The apparatus A–3 is lowered on a wire line or cable **321** which preferably is connected with a rotating tool of conventional construction or any other suitable construction (not shown) so that the flexible head **315** may be moved to different positions to facilitate the insertion thereof in a hole H such as shown in FIG. 9 of the drawings. The lower end of the cable **321** is secured to the receptacle **310** by a ring **321*a*** which is welded, or otherwise secured to the housing or cylinder **310**.

In the operation or use of the form of the invention illustrated in FIGS. 8 and 9, the apparatus is manipulated in the well in the same manner as explained heretofore in connection with FIGS. 1–4 so that the apparatus A–3 is lowered below the hole H to be plugged and is raised upwardly above such hole until such time as the differential fluid pressure in the well moves the flexible head **315** into the hole H. After the resilient material **312*a*** on the pipe engaging element **312** has seated itself against the inside surface of the pipe P so as to initially close the hole H the fluid pressure differential between the inside of the pipe P and the outside thereof is sufficient to force the piston **320** from its original position (FIG. 8) to the right and thus to its discharged position (FIG. 9). The fluid in the cylinder or receptacle **310** is discharged through the opening **315*a*** and it mixes with the fluid in the chamber or interior **315*d*** of the flexible head **315**. Since the piston **320** forces a greater amount of fluid into the interior **315*d*** of the flexible head **315** than was initially therein, the flexible head **315** is expanded or stretched so that it normally assumes a substantially globular or spherical shape such as illustrated in FIG. 9 to accommodate the additional material. The material S then preferably solidifies or hardens and because of the difference in the shape of the flexible head **315**, the diameter of the flexible head **315** is then greater than the diameter of the hole H to prevent the return of the apparatus A–3 back into the pipe P. The ball **325** serves as a closing means for closing the hole **315*a*** and it also facilitates the distortion of the flexible head **315** to the enlarged shape as best seen in FIG. 9.

After the sealing material S has hardened within the enlarged head **315** to substantially the shape shown in FIG. 9, the apparatus A–3 may be severed at a suitable point such as a score line or ring **310*g***, and such severing can be accomplished by applying jarring forces to the receptacle **310** through any conventional type of wireline jars or weights on the wireline **321**.

In FIGS. 10 and 11, a modified form of the apparatus A–4 is illustrated and it is of a type which is adapted to be dropped in the pipe P without any cable or other supporting line. The device A–4 includes a receptacle **410** which has two compartments **410*a*** and **410*b*** which are interconnected with an opening **410*c*** having a ball **425** or other suitable movable closure element between the compartments **410*a*** and **410*b***. Within the compartments **410*a*** and **410*b***, the sealing material S is disposed, and it may be of the epoxy type having two or more components which are maintained separately from each other until such time as it is desired to solidify same. The receptacle **410** is joined at an intermediate point by a circular disk or plate **412** which also serves as a pipe engaging element. The compartments **410*a*** and **410*b*** are filled by any suitable means. As illustrated in FIG. 10, a passage **412*a*** extends from the outer edge of the element **412** inwardly to one side of the ball **425** for filling the compartment **410*a***. After the compartment **410*a*** is filled, the passage **412*a*** is closed off by a suitable plug **412*b***. Another passage **412*c*** establishes communication from the outer edge **412** to the compartment **410*b*** to the right of the ball **425**, and it also has a suitable plug **412*d*** for closing same after fluid fills the compartment **410*b***. The element **412** is preferably a plate made of steel or relatively heavy material as compared to the receptacle **410** and the liquid sealing material S therein, so that when the apparatus A–4 is dropped in the fluid within a pipe P, it falls downwardly therein with the plate **412** substantially vertically as shown in FIG. 10. The outer ends of the receptacle **410** serve as the flexible heads **415**, one of which is adapted to fit within the hole H and the other end of which is collapsed as illustrated in FIG. 11 so as to discharge the contents from one end of the compartments **410*a*** or **410*b*** into the other of such compartments to mix the two components of the sealing

material S together so as to enlarge the compartment in which the contents of the sealing material S are finally disposed (FIG. 11) to a diameter which is greater than the diameter of the hole H. Therefore, after the sealing material S has hardened, the hole H is plugged or closed and the assembly A–4 is retained in position and cannot be dislodged therefrom.

In the operation or use of the apparatus of FIGS. 10 and 11, the apparatus A–4 is lowered or dropped in the fluid such as the well fluid within the pipe P. A differential pressure is created or exists across the hole H which is to be plugged so that there is a greater pressure internally of the pipe P than externally thereof. When the apparatus A–4 reaches the vicinity of the hole H, the velocity of the fluid moving through the hole H draws and forces the apparatus to move towards such hole H and the head **415** on one end of the compartment **410** moves through the hole H to bring one side of the pipe engaging element **412** into contact with the inside of the pipe P at which time substantially all of the flow of the fluid from the inside of the pipe P to the area externally thereof is cut off. When such condition occurs, the fluid pressure internally of the pipe P, being greater than that externally, causes a collapse of the receptacle **410** on the inside of the pipe P and this initially forces the ball **425** into the portion of the receptacle **410** which is externally of the pipe P (FIG. 11). Then, the portion of the sealing material S which is in the compartment **410***a* is forced or squeezed through the opening **410***c* and it mixes with the portion of the sealing material in the compartment **410***b* so that they then are mixed together and react chemically to solidify into a solid. Due to the increased amount of the material S within the compartment **410***b* after the contents of the compartment **410***a* have been forced into the compartment **410***b*, the diameter of the compartment **410***b* is enlarged to a diameter greater than that of the hole H (FIG. 11) so that after the sealing material S has solidified it cannot return back into the pipe P.

Instead of dropping the apparatus A–4 by itself, a wire line carrier (not shown) may be used for connecting a plurality of such units A–4 together at different points on the wireline carrier so that as each of the units A–4 enters a hole it detaches itself from the wire and the remaining units A–4 are then worked up and down in the well to seal or close other holes or perforations until they are all plugged.

In the form of the invention illustrated in FIGS. 12–14, the apparatus A–5 is essentially the same as that illustrated in FIG. 5 and like parts bear like numerals, although it is shown as having only a single component sealing material S therein and therefore the dividing plate **110***c* has been omitted.

In the form of the invention illustrated in FIGS. 12–14, the pipe engaging element **512** is utilized instead of the pipe engaging element **12** and the flexible head **15** of FIGS. 1 and 5. The pipe engaging element **512** may be of different configurations such as illustrated at the **512** and **512'** in FIGS. 13 and 14, and they are adapted to seal around holes, cracks, or openings H–1 of different shapes and configurations. The pipe engaging element **512** has a plurality of holes **512***a* distributed over its inside surface which are surrounded by a sealing ring **512***b*. The sealing element **512'** also has holes **512***a* and a sealing ring **512***b*. The seal ring **512***b* is adapted to fit into sealing engagement with the inside surface of the pipe P around the crack, split, hole or other opening H–1 so as to seal off the fluid within the pipe P from such opening H–1. When this occurs, the fluid pressure within the pipe P functions to squeeze the receptacle wall **110** to force the sealing material S outwardly through the openings **512***a* so as to form a mass of the sealing material S in the hole H–1 and just externally thereof for forming a plug or closure for such hole H–1. A decentralizer which includes a spring **60** mounted on a support bar or rod **61** suspended from the lower end of the apparatus A–5 is utilized for maintaining the element **512** in relatively close proximity to the inside of the pipe P to facilitate its engagement and sealing around the opening H–1 when the element **512** is disposed in proximity to such opening H–1. The differential fluid pressure within the pipe P serves to effect the movement of the element **512** into contact with the inside surface of the pipe P for such sealing engagement between the seal **512***b* and the inside of the pipe P. The apparatus A–5 may be rotated by any suitable rotating tool to facilitate the location of the element **512** over the hole or opening H–1.

The operation or use of the apparatus A–5 is essentially the same as that described heretofore in connection with FIG. 1. Thus, the apparatus A–5 is lowered and raised alternately and is preferably also rotated until such time as the movement of the fluid from the inside of the pipe P to the area externally thereof forces the element **512** into sealing contact with the area surrounding the hole H–1. When that occurs, the differential in pressure of the fluid within the pipe P as compared to that externally of the pipe P is sufficient to compress the flexible wall of the receptable **110** and force the contents of the receptacle, namely the sealing material S, outwardly through the chamber **511** and then the openings **512***a* to the area externally of the hole H–1 in the vicinity of same. The entire apparatus A–5 is permitted to remain in position a sufficiently long time for the sealing material S to solidify or harden and then the apparatus may be detached by pulling upwardly or jarring same downwardly. The element **512** may be detached with the rest of the apparatus A–5, or shear areas may be provided for severing the element **512** off from the rest of the apparatus so as to leave the element **512** in position over the the opening H–1 after the rest of the apparatus A–5 is moved upwardly in the well.

Although the invention has been described with a flowable material or fluid for forming the closure or plug in the hole H, the invention is not limited thereto since any material, such as deformable metals, inserted through the hole H for serving as a closure material for the hole H may be used.

The foregoing disclosure and description of the invention are illustrative and explanatory thereof, and various changes in the size, shape, and materials as well as in the details of the illustrated construction may be made without departing from the spirit of the invention.

What is claimed is:

1. Apparatus for closing an opening in a well pipe comprising:

a pipe engaging element adapted to engage the inside wall of the well pipe and adapted to be moved into position over said opening by the flow of fluid from inside of the well pipe through the opening in the well pipe;

said pipe engaging element having a sealing surface for sealing engagement with the inside wall surrounding said opening in the well pipe to substantially close off fluid flow through said opening; and

receptacle means with said pipe engaging element and having closure material therein for introduction through said opening to the area externally of said well pipe for closing said opening.

2. The structure set forth in claim **1**, wherein said sealing surface is flexible and including:

a plurality of discharge ports through which fluid flows for discharging material through said opening and externally of said well pipe.

3. The structure set forth in claim **1**, including:

means mounting said receptacle means on one side of said pipe-engaging element;

a flexible head disposed on the other side of said pipe-engaging element; and

passage means in said element for the flow of fluid from said receptacle means to said head after said head is disposed through said opening.

4. The structure set forth in claim 3, including:
a removable closure in said passage means to maintain the fluid in said receptacle means until discharged into said head.

5. The structure set forth in claim 1, including:
a flexible head having a diameter equal to or less than that of said opening in the well pipe and adapted to extend through said opening; and
said head being adapted to be expanded to a diameter greater than that of said opening in the well pipe while said head extends through the opening.

6. The structure set forth in claim 5, including:
a ball check valve inside of said flexible head for permitting fluid to enter said head but for preventing the return thereof from said head.

7. The structure set forth in claim 5, including:
means for forcing material into said head from said receptacle means by fluid pressure in the well pipe after the pipe engaging element has seated itself in engagement with the inside surface of the well pipe.

8. The structure set forth in claim 7, wherein:
said means for forcing the sealing material into said head includes a piston in said receptacle means which is moved by fluid pressure in the well pipe after the pipe engaging element has seated itself in engagement with the inside surface of the well pipe.

9. The structure set forth in claim 7, wherein said means for forcing material into said head includes a piston operable, by pressure in the well pipe.

10. The structure set forth in claim 1, including:
a head adapted to enter the opening in the well pipe;
port means establishing fluid communication from said receptacle means to said head; and
means for forcing the sealing material from said receptacle means through said port means of said receptacle means after said head is in said opening.

11. The structure set forth in claim 10, wherein:
the wall of said receptacle means is flexible and serves as said means for forcing the sealing material from the receptacle means when it is squeezed by the fluid pressure in the well pipe for discharging same from said receptacle means.

12. The structure set forth in claim 11, including:
means for separating said receptacle means into two compartments for thereby retaining two components of a sealing material separate from each other until discharged together from said receptacle means for mixture and hardening in an area externally of the opening in the well pipe.

13. The structure set forth in claim 10, including:
a plurality of flexible heads disposed at different radial positions relative to said receptacle means;
means establishing fluid communication between all of said flexible heads and said receptable means; and
check valve means in each of said heads for preventing fluid in the well pipe from entering any of said heads, but permitting an opening of the one of said heads which is subjected to a differential fluid pressure when it is in the opening in the well pipe.

14. The structure set forth in claim 10, wherein:
said means for forcing the sealing material from said receptacle means includes an explosive which is adapted to be detonated for providing a force on said sealing material to discharge same from said receptacle.

15. The structure set forth in claim 10, wherein:
said pipe engaging element is a disk which is disposed substantially mid-way between said receptacle means and said head;
passage means are provided in said element for the flow of material from said receptacle means to said head; and
said passage means is closed by a removable closure until said flexible head enters said openng.

References Cited

UNITED STATES PATENTS

2,933,136	4/1960	Ayers et al.	166—284
3,292,700	12/1966	Berry	166—284
3,376,934	4/1968	Willman et al.	166—284 X
3,379,251	4/1968	Bohn	166—286
3,399,726	9/1968	Harris et al.	166—284
3,437,147	4/1969	Davies	166—284

DAVID H. BROWN, Primary Examiner

U.S. Cl. X.R.

166—284, 63