United States Patent

[11] **3,608,630**

[72] Inventors **Bruce J. Wooden**
Rockville;
Alan M. Bieber, Potomac, both of Md.

[21] Appl. No. **783,945**
[22] Filed **Dec. 16, 1968**
[45] Patented **Sept. 28, 1971**
[73] Assignee **Ocean Systems, Inc.**
New York, N.Y.

[54] **OFFSHORE OIL PRODUCTION METHOD AND APPARATUS**
2 Claims, 2 Drawing Figs.

[52] **U.S. Cl.** **166/.5,** 175/206
[51] **Int. Cl.** **E21b 43/01**
[50] **Field of Search** ..... 166/.5, .6

[56] **References Cited**

UNITED STATES PATENTS

3,221,816	12/1965	Shatto et al.	166/.5
3,353,364	11/1967	Blanding et al.	166/.5
3,366,173	1/1968	McIntosh	166/.5
3,391,734	7/1968	Towsend	166/.5
3,401,746	9/1968	Stevens et al.	166/.5
3,454,083	7/1969	Brooks	166/.5

Primary Examiner—James A. Leppink
Assistant Examiner—Richard E. Favreau
Attorneys—Paul A. Rose, Thomas I. O'Brien, Gerald Weir, Dominic J. Terminello and Eugene Lieberstein

ABSTRACT: Offshore oil production system wherein one or more buoyant enclosures are submerged adjacent the ground and serve as sites for manifolding the oil produced from a plurality of wells. The enclosures contain equipments for separating the gas from the oil. The oil, after separation of gas, is transferred from the enclosures to a common oil storage vessel where it is stored prior to transmission to shore.

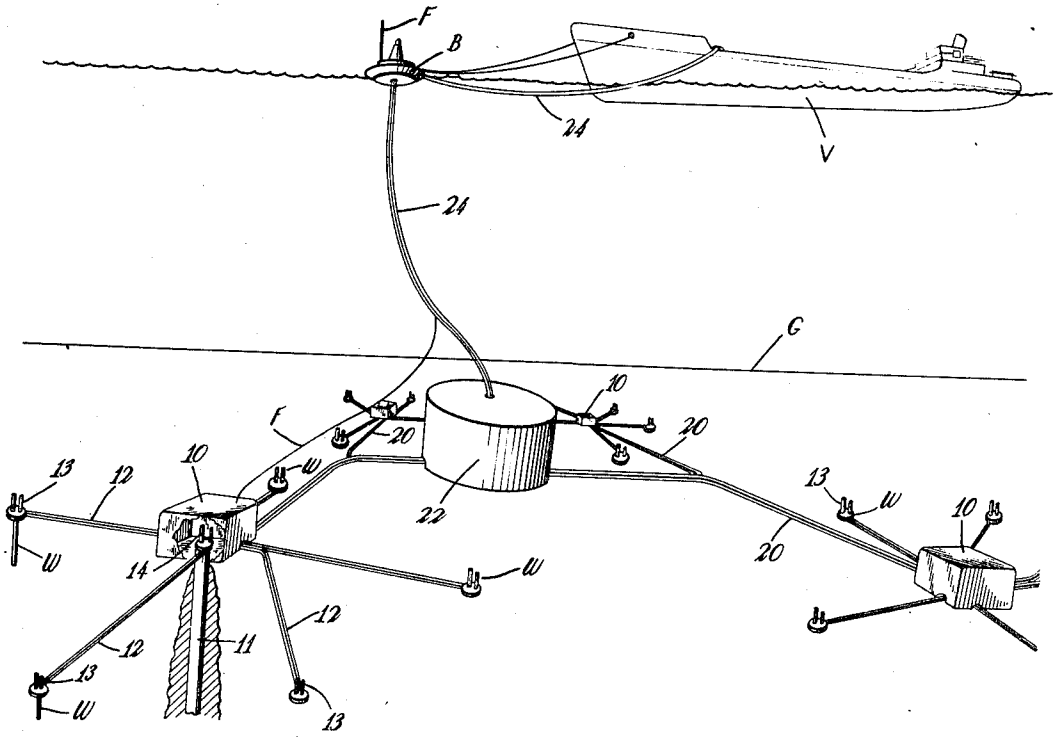

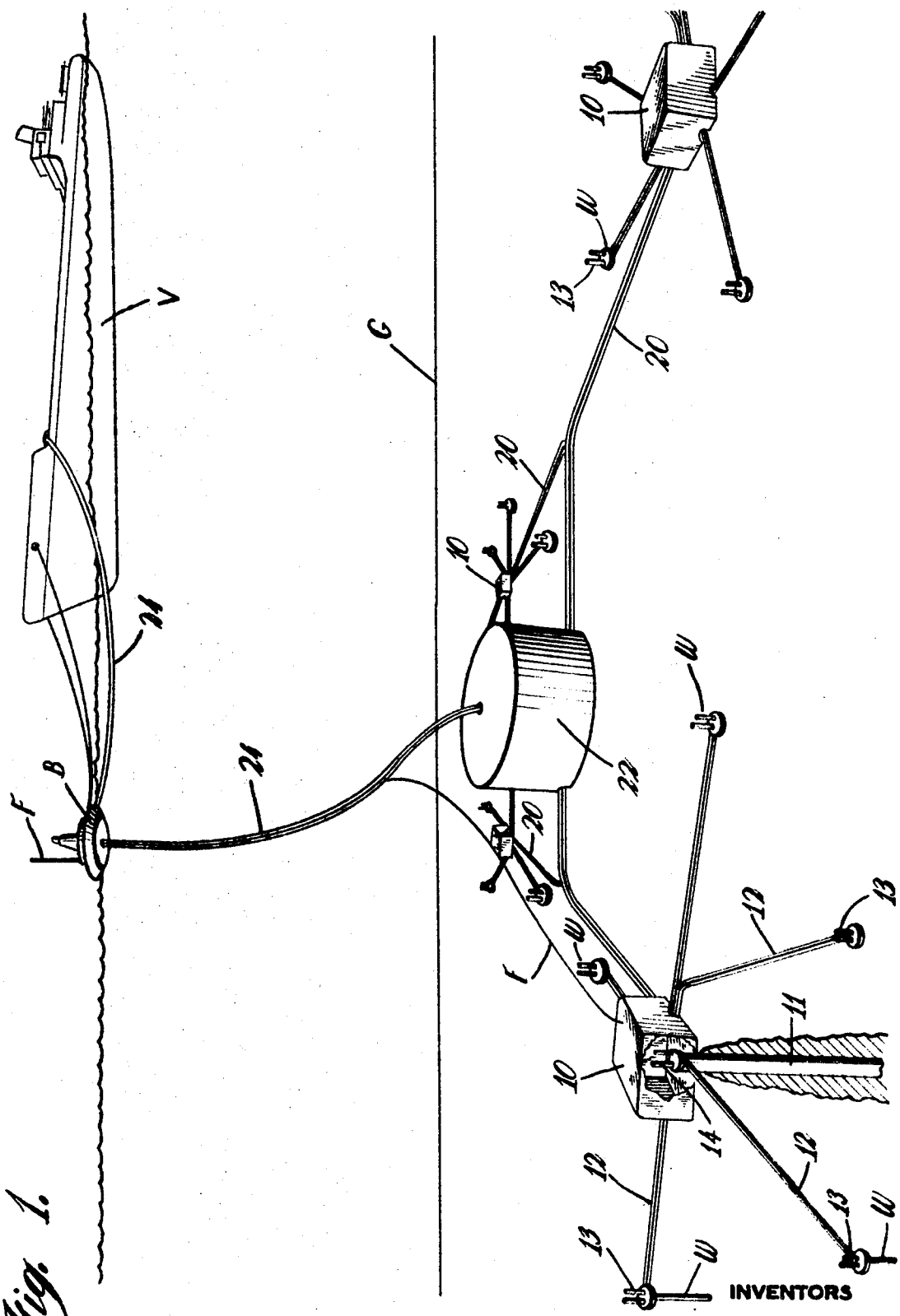

Fig. 1.

INVENTORS
BRUCE J. WOODEN
ALAN M. BIEBER
BY
ATTORNEY

Fig. 2.

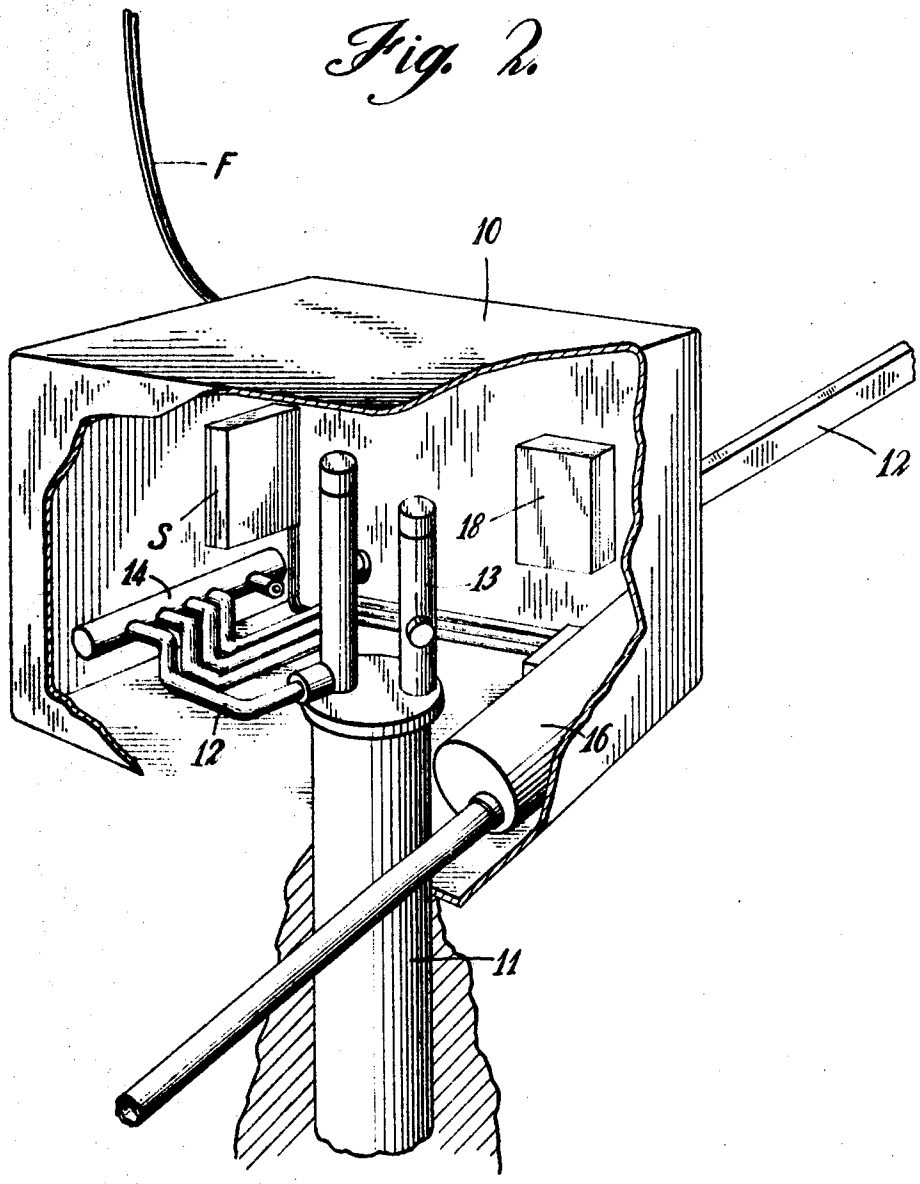

INVENTORS
BRUCE J. WOODEN
ALAN M. BIEBER
BY
ATTORNEY

OFFSHORE OIL PRODUCTION METHOD AND APPARATUS

This invention relates to oil production from underwater oil fields, commonly known in the art as offshore oil production.

The conventional methods of producing oil from offshore location involve either the installation of underwater pipelines from each well to the shore when the production is within a few miles offshore, or the construction of production platforms supported from the ground beneath the water and extending above the surface thereof. In some instances, particularly when the underwater field is far offshore, oil production platforms are used to collect the oil from the underwater wells and then pump it into a pipeline communicating with the shore. In other instances, production platforms which include associated storage facilities are used to collect, separate the waste products from the oil and store the oil until it is either pumped into a pipeline or transferred to a tanker.

The present offshore oil production systems are complex and expensive, particularly when the wells are located 150 feet or more below the surface. In cases where production platforms are utilized, they must be designed to support the substantial weights of the huge structures which usually provide not only for oil storage but, in addition, for living quarters for personnel as well as for separation equipment, pumping equipment and various mechanical handling equipment. The platform structures must also be designed to with stand the forces of most severe ocean storms. These factors require the platforms to employ extremely heavy structural sections, resulting in substantial material, fabrication and installation costs. The platforms are still vulnerable to damage by surface marine traffic as well as by storms, and numerous cases of complete loss of the structures as well as of substantial damage there to have already been recorded.

Several additional problems of a major nature are associated with the use of offshore production platforms. Since many production platforms are designed to handle the production from 20 or more wells concurrently, a significant time delay in beginning production from any of the wells is usually required until after the drilling of many wells has been completed from the same platform. The reason for this is that it ordinarily is extremely hazardous to produce oil from previously drilled wells from a given platform concurrently with the drilling of new wells from the same platform because of the possibility of fires or explosions. The magnitude of this delay in production can be substantial, resulting in a serious loss of revenue. For example if a typical well requires 1 month of drilling time, a platform equipped to produce oil from 20 wells would usually delay production from any of the wells for a period of as much as 2 years.

Another major difficulty is that many areas of the country consider offshore platforms unsightly in appearance as well as a hazard to marine navigation, and have accordingly passed legislation which greatly restricts the number of such platforms permissible within view of the shore. The effect of these restrictions is that only the most productive oil fields are placed into production; frequently, many small oil fields with known reserves are left untapped. This is particularly prevalent when the smaller fields are relatively far offshore or in relatively deep water.

An object of the invention is to provide a method and apparatus for producing oil from underwater oil fields which does not require the use of surface production platforms.

Another object is to provide an offshore production method and apparatus which does not require the use of flow lines from each well to the shore.

A further object is to provide an offshore production method and apparatus which is not affected by the full force of surface weather conditions.

Still another object is to provide a method and apparatus which is not vulnerable to collision from surface vessels or objects, e.g., icebergs.

Yet another object is to provide an apparatus which facilitates the production of oil from previously drilled wells concurrent with the drilling of additional wells without substantial hazards of fire and explosion.

Another object is to provide an apparatus which can safely operate completely submerged.

Yet another object is to provide a method and apparatus which enables the use of land type wellheads and associated equipment of simple construction and lower cost than present underwater wellheads and associated equipment.

A still further object is to provide an apparatus which is completely submerged and which includes means for collection, separation and storage of oil.

Other objects and advantages of the invention will be apparent from the remaining specification and appended claims.

In the drawings:

Fig. 1 is a perspective view of an apparatus according to the present invention for producing oil from one or more underwater wells;

FIG. 2 is an enlarged view of an enclosure shown in FIG. 1.

According to the invention, as offshore production method is provided for producing oil from at least one underwater well by providing a buoyant oil production assembly adjacent the ground. The oil is extracted from the well and flowed into such assembly. The gas is at least partially separated from the oil within the production assembly. Thereafter the oil is either transferred to a submerged storage zone or discharged into a pipeline or tanker for transmission to the shore.

Preferably, a pressurized nonoxidizing gas is introduced into the assembly in order to displace the water therefrom and maintain same in a substantially dry condition. In order to provide a nonexplosive environment in the assembly, the gas introduced should be nonoxidizing and should be introduced in sufficient quantity so as to maintain the partial pressure of oxygen within the assembly below 5 percent. Preferably, the gas introduced is the gas separated from the oil flowing into the assembly.

Preferably a plurality of oil production assemblies are provided for a given oil field and, in addition, a separate submerged oil storage zone is provided. Oil can then be transferred, after gas is at least partially separated therefrom in the production assemblies, to this common storage zone prior to its transfer to the shore.

Offshore apparatus for producing oil from an underwater well according to the invention is provided and comprises a buoyant enclosure positioned adjacent the ground and anchored thereto. Conduit means interconnect the underwater well or wells with the enclosure. Since, according to the invention, the capsule is buoyant, the means serving to hold the same in position will always be in tension. Thus, massive foundations as required by offshore platforms are not required.

The enclosure contains separation means for separating gas from the oil flowing therein as well as means for controlling the pressure and oxygen content therein.

Preferably, each enclosure contains one or more wellheads for controlling the oil flow from the wells. In addition, a plurality of enclosures may serve an oil field. While not limited thereto, it is particularly valuable, according to the present invention, to provide a common submerged storage vessel connected by suitable conduit means to the plurality of enclosures for storing the separated oil prior to its transmission to the shore.

Referring to the drawings, a buoyant enclosure **10** is shown submerged adjacent the ground surface G and constitutes a buoyant oil production zone. The enclosure **10** is anchored by production casing **11**. The enclosure **10** is interconnected by conduit means **12** to one or more wells W for transferring oil produced thereinto, the conduit means **12** terminating in a manifold **14** within the enclosure. The wellheads **13** located at the well sites may be of simple construction. This is made possible by the use of a control system S located within each enclosure. Each enclosure contains separation means **16** for separating gas from the oil entering same. A portion of the separated gas is preferably introduced into each enclosure **10** in order to maintain the atmosphere in a nonexplosive condition. This can be done by introducing sufficient gas, such that the oxygen partial pressure is maintained below 5 percent. As

long as the oxygen partial pressure level is maintained below about 5 percent, the system will operate without the hazard of fires or explosions. The atmosphere may be regulated by atmosphere control means **18** which may include filters, precipitators, scrubbers, burners, absorption media, fans, gas generators, gas analysis equipment, etc. The atmosphere control means **18** may also have provisions for regulating the total pressure within the capsule. If desired, another nonoxidizing gas may be introduced into the capsule to control the oxygen partial pressure as well as to displace water and thereby maintain the enclosures in a substantially dry condition.

The remaining separated gas from separation means **16** is flared to the water surface through flare line F or consumed by power generation equipment (not shown) located within the buoy B.

Preferably, the oil, after having the gas at least partially separated therefrom, is transferred from the enclosures **10** through means **20** to a common submerged oil storage vessel **22**. The storage vessel **22** is periodically emptied into a tanker V through off-loading conduit **24** supported by buoy B.

Power and control equipment are connected with the enclosures by suitable cables (not shown) from the buoy B.

The use of the invention as aforedescribed enables the art to economically produce oil from offshore locations without substantial effects from weather conditions or marine traffic, since the production zone is submerged. Aesthetic problems associated with surface platforms are nonexistent for the same reason.

While the invention has been described in connection with a specific system for producing oil from an underwater well, it is obvious that many changes may be made in the system without departing from the spirit and scope of the invention as defined in the claims.

What is claimed is:

1. Offshore oil production method which comprises:

a. providing a buoyant oil production assembly adjacent the submerged ground surface, said assembly including a control system;

b. extracting oil from at least one well below the ground and transferring same into said assembly;

c. separating gas in the assembly from the oil transferred thereinto;

d. introducing said separated gas into the assembly in order to displace the water therefrom and maintain same in a substantially dry condition;

e. discharging the separated oil from the assembly for transfer to the shore;

f. each of steps (b), (c), (d) and (e) being controlled from the surface of the sea by operation of said control system in said assembly.

2. Offshore oil production apparatus which comprises:

a. a submerged buoyant enclosure positioned adjacent the ground and being anchored thereto;

b. conduit means communicating the enclosure with at least one oil well for transferring oil from the well into the enclosure;

c. well head means in said enclosure connected to said conduit means;

d. wellhead in the enclosure for separating gas from the oil flowing thereinto;

e. means for introducing said separated gas into said enclosure to displace the water therefrom and maintain same in a substantially dry condition.

f. means for flowing the separated oil out of the enclosure for transfer to the shore;

g. means for controlling the pressure and oxygen content within the enclosure; and

h. means located at the surface for operating, said means defined in (d), (e), (f), (g), and (h).