DENTURE WASHER

Filed May 18, 1970 2 Sheets-Sheet 1

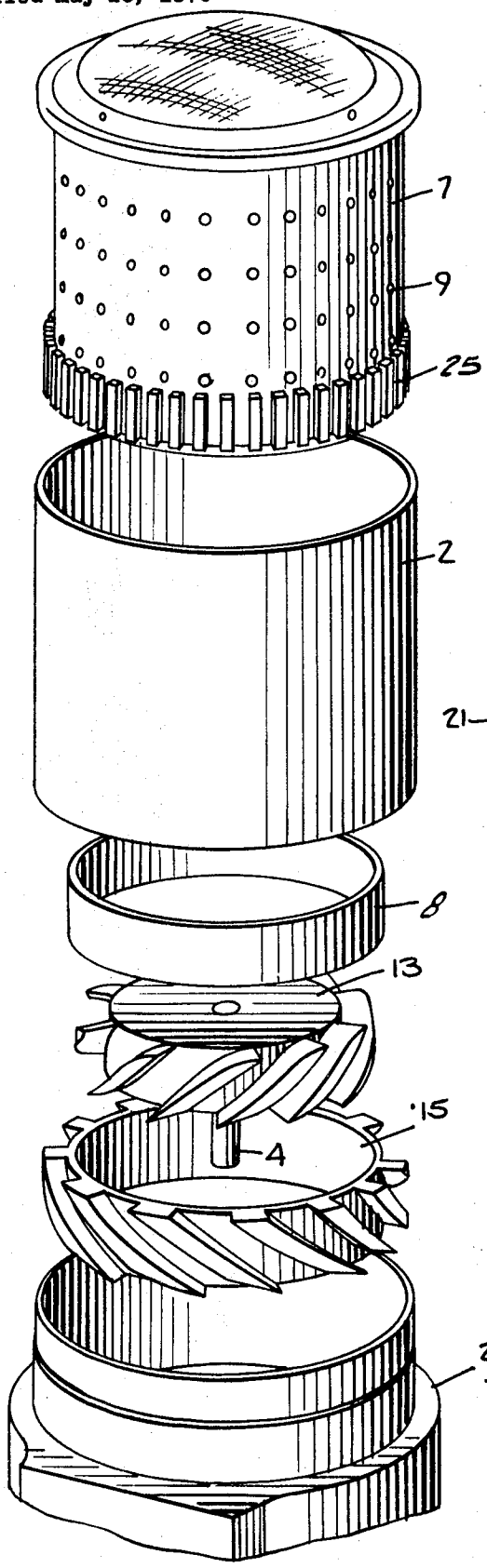

Fig. 4.

Fig. 1.

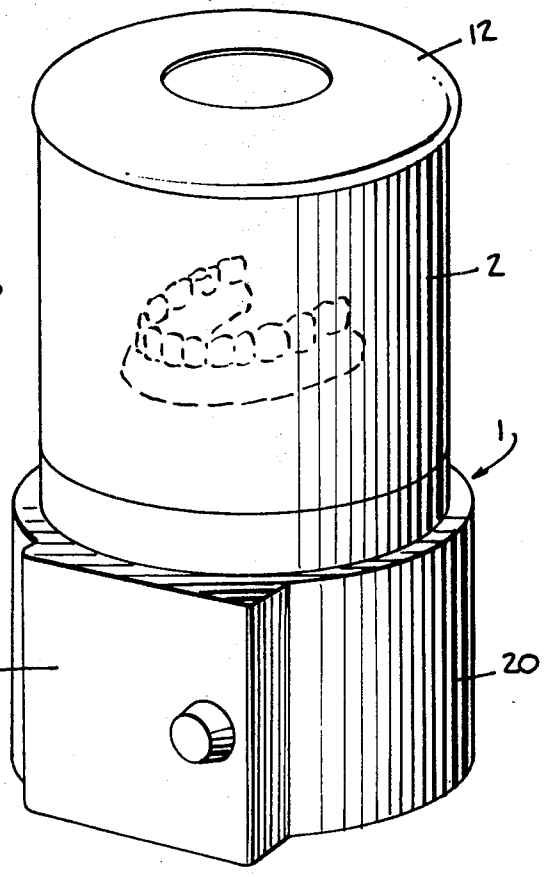

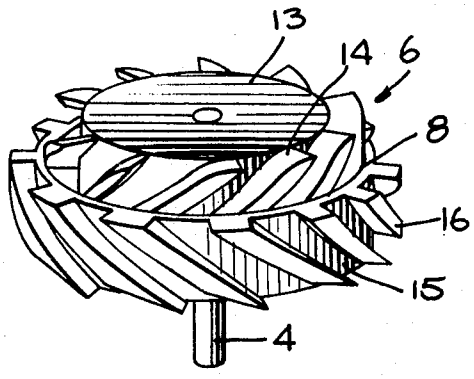

Fig. 5.

INVENTOR.
GABRIEL S. NELSON
BY
Norman D. Holland
ATTORNEY

DENTURE WASHER

Filed May 18, 1970 2 Sheets-Sheet 2

Fig. 2.

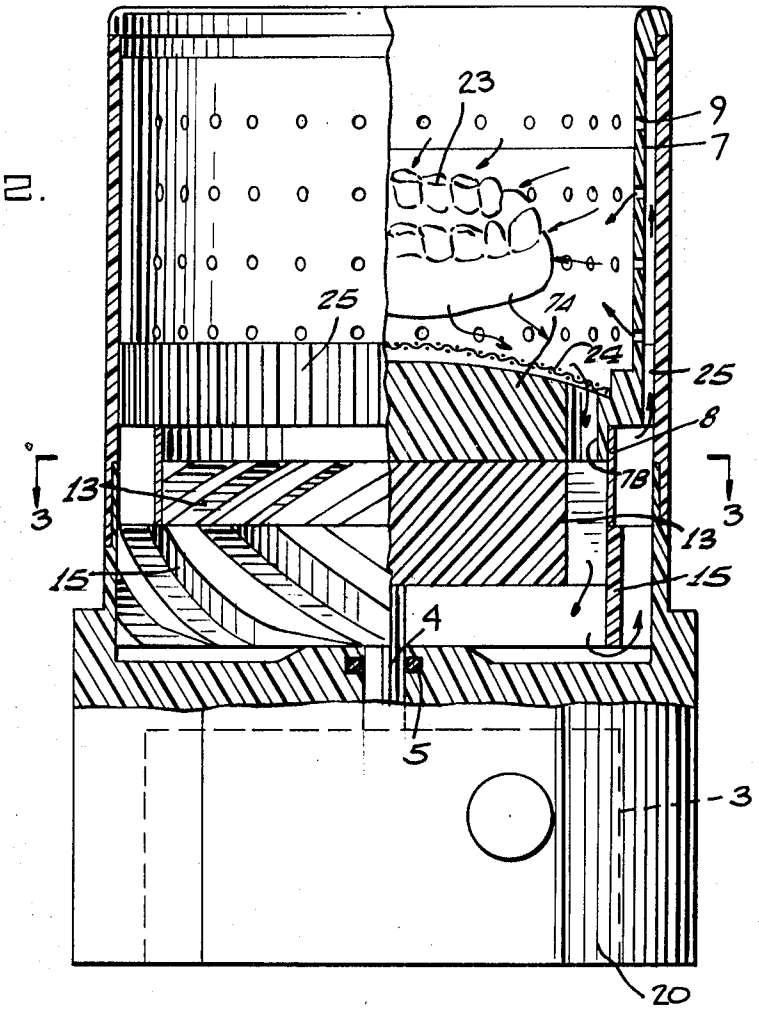

Fig. 3.

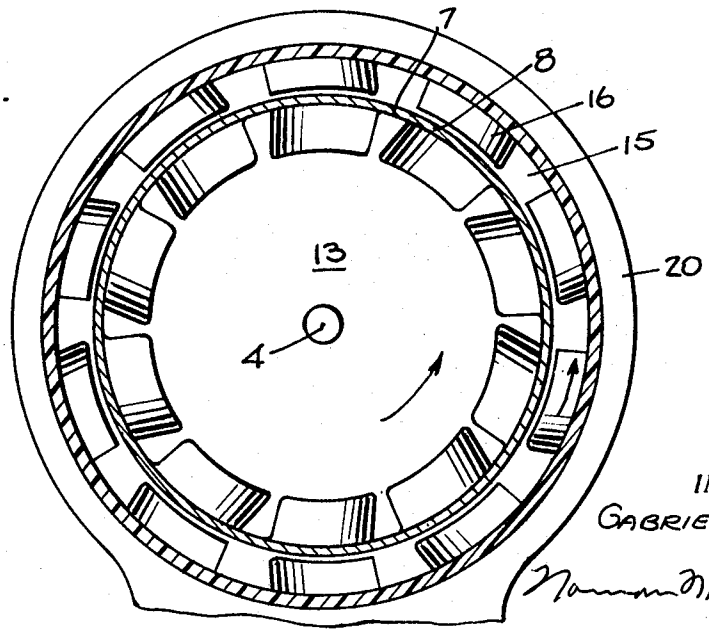

INVENTOR.
GABRIEL S. NELSON

ATTORNEY

United States Patent Office

3,606,274

Patented Sept. 20, 1971

1

3,606,274

DENTURE WASHER

Gabriel S. Nelson, Box 133, R.D. 1, Station Road, New Paltz, N.Y. 12561

Filed May 18, 1970, Ser. No. 38,164
Int. Cl. B01f 5/12
U.S. Cl. 259—95 3 Claims

ABSTRACT OF THE DISCLOSURE

A denture washer which circulates washing fluid within a hollow denture washing housing. A fluid impeller is mounted at the bottom of the housing having two coaxial impellers including a larger diameter impeller for forcing fluid upwardly into the denture support housing and a smaller impeller for pulling the fluid downwardly. A perforated cylindrical stack or divider is placed in the housing with its lowermost portion positioned intermediate the impellers to separate the respective fluid flows.

DESCRIPTION OF THE INVENTION

The present invention relates to a denture washer having a structure which provides for a high velocity and precisely directed fluid circulation for rapid and thorough denture cleansing.

A number of denture washers are presently used, however, these prior devices use vibratory systems or circulating system having generally low velocity fluid circulation. The achievement of a more rapid and better directed flow of the washing fluid, as obtained in the present device, gives significantly improved results. This increased fluid flow, for example, gives improved washing ability and decreases the amount of time necessary for the denture washing operation.

The denture washer of the present invention is designed to be useful for ordinary domestic applications and is of such a size as to be capable of table-top use. An improved dual impeller member is incorporated within the design in cooperation with a cylindrical flow separating stack. This combination is contained within a suitable housing containing a mixing chamber wherein the one impeller member forces fluid up along the walls of the chamber while the other impeller member draws the fluid downwardly within the cylinder to provide a rapidly circulating fluid flow.

An object of the present invention therefore is to provide an improved denture washer.

Another object of the present invention is to provide a improved fluid impelling means in a denture washer.

Another object of the present invention is to provide an improved impeller with improved blade design.

Another object of the present invention is to provide a denture washer having an improved combination of fluid driving and fluid directing means.

Other and further objects of the invention will be obvious upon an understanding of the illustrative embodiment about to be described or will be indicated in the appended claims, and various advantages not referred to herein will occur to one skilled in the art upon employment of the invention in practice.

A preferred embodiment of the invention has been chosen for purposes of illustration and description and is shown in the accompanying drawings, forming a part of the specification, wherein:

FIG. 1 is a perspective view of the denture washing machine of the present invention;

FIG. 2 is a vertical sectional view of the machine of FIG. 1;

FIG. 3 is a sectional view taken along line 3—3 on

2

FIG. 2 showing the impeller design of the present invention;

FIG. 4 is an exploded perspective view of the machine; and

FIG. 5 is a perspective view of a preferred embodiment of an impeller member in accordance with this invention.

As shown in the drawing, a preferred embodiment of the denture washing machine of the present invention is constructed of a housing **1** having a hollow chamber **2** in its upper portion, and accommodating a drive motor **3** in its lower portion **20**. The lower portion **20** may have a door **21** provided therein in order to gain access to the motor. The shaft **4** of the drive motor **3** extends through an opening in the floor of the chamber **2** which is fitted with an appropriate seal **5**. The drive shaft **4** rotates a dual impeller member **6** which is mounted thereon leaving a slight clearance above the floor of the chamber and with its outer periphery immediately adjacent to but not engaging the chamber wall. A stack member **7** in the form of a cylinder with a bottom **7A** having aperture **7B** is disposed axially within the chamber **2** above the impeller member **6**. The upper portion of the cylinder **7** is perforated as at **9** to permit the passage of the circulating fluid driven by the impeller member **6** past vanes **25** (FIGS. 2 and 4). The chamber **2** may be provided with a closure **12** on top although one is not required for proper operation of the device.

The improved impeller member **6** of the present invention is shown in detail in FIG. 5. It is comprised of two coaxial impellers, the interior one **13** having its blades **14** on its cylindrical side surface coupled to outer impeller **15** and oriented to drive fluid axially downwardly from apertures **7B** while the outer one **15** has its blades **16** oriented oppositely to drive fluid axially in the upward direction. Preferably, the two impellers **13** and **15** are somewhat axially displaced from each other with the inner one **13** being positioned slightly higher in the chamber **2** than the outer one **15**. A cylindrical wall **8** surrounds the upper surface portion of the member **6** about spaced from the inner impeller **13**. This wall **8** acts to separate the flow and prevents interference and turbulence between the oppositely directed fluid streams.

Each of the impellers **13** and **15** is of the axial-flow type and directs the fluid flow in a direction generally parallel to its axis of rotation, as distinguished from prior known dial impellers which combine axial and centrifugal flow elements. In addition, the blades **14** and **16** of the present impellers are shaped to achieve increased acceleration of the flow. As seen in FIG. 4, the angle of the blades of both impeller **13** and **15** with respect to the impeller axis is approximately 60°. However, it has been found that by modifying the tip portions of the blades to form a 75° angle with respect to the impeller axis the rate of flow can be almost doubled.

The impeller member is preferably cast from a single block to give it a unitized construction as shown in FIG. 5. However, the two impellers can be made individually as shown in FIG. 4 and then connected together by suitable means. In order to maintain an equal volume of flow through the two impellers to avoid turbulence, the blade passages of the inner impeller **13** are made larger than those of the outer impeller **15**.

The denture washer of the present invention operates as follows. The mixing chamber **2** is filled to about its midpoint with the fluid to be circulated. The dentures **23** to be washed are placed within the perforated cylinder **7** which may be adapted by means of additional supports or partitions to properly hold such items therein. A closure **12** may be used if desired.

The motor **3** is started which causes the impeller **6** to be rotated. The inner impeller **13** will then draw fluid downwardly within the cylinder **7** while the outer impeller **15** drives it upwardly between the inner wall of the housing **1** and the outer surface of the cylindrical stack **7** shown by arrows in FIG. 2. The upwardly accelerated fluid flow outside the stack is drawn in through the perforations **9** in the upper portion of the cylinder **7** by the downward drawing action of the inner impeller **13**. This sets up a very rapidly circulating circular flow within the chamber **2** which conforms to the shape of the denture surfaces to be washed and insures thorough bathing by the flow and gives a superior cleansing effect.

It will thus be seen that an improved fluid circulator is provided by the present invention which gives a superior mixing and cleansing action. An improved fluid drive impeller member has been disclosed, which, in combination with a fluid flow separating stack, produces an improved rate of fluid flow over that achieved by the devices of the prior art.

As various changes may be made in the form, construction and arrangement of the parts herein without departing from the spirit and scope of the invention and without sacrificing any of its advantages, it is to be understood that all matter herein is to be interpreted as illustrative and not in a limiting sense.

Having thus described my invention, I claim:

1. A denture washer comprising:

(a) a hollow washing chamber;

(b) a hollow stack member for accommodating the denture positioned in said chamber having a perforate bottom and perforate side walls spaced from the inner walls of the chamber;

(c) a liquid impeller rotatably mounted in said chamber below said stack member;

(d) said impeller having an inner portion for moving liquid downwardly from the stack member and an outer portion for moving fluid upwardly of the stack member through the perforations in the stack member side walls; and

(e) drive means for rotating said impeller.

2. The denture washer as claimed in claim **1** in which said inner portion of said impeller has a circular array of blades for moving the liquid downwardly and the outer portion of the impeller has a circular array of blades for moving the liquid upwardly.

3. The denture washer as claimed in claim **2** in which said blades have a greater angle with respect to the axis of rotation of the impeller at their tips than at the other portions of the blade.

References Cited

UNITED STATES PATENTS

3,051,452	8/1962	Nobel	259—95X
3,376,878	4/1968	Shoemaker	259—99X
3,421,528	1/1969	Gomez et al.	259—108X
3,462,137	8/1969	Hill	259—95

JORDAN FRANKLIN, Primary Examiner

G. V. LARKIN, Assistant Examiner

U.S. Cl. X.R.

134—184; 259—Dig. 46