Sept. 20, 1971 J. A. RAPOZA 3,605,732

EXERCISING DEVICE

Filed Sept. 10, 1969

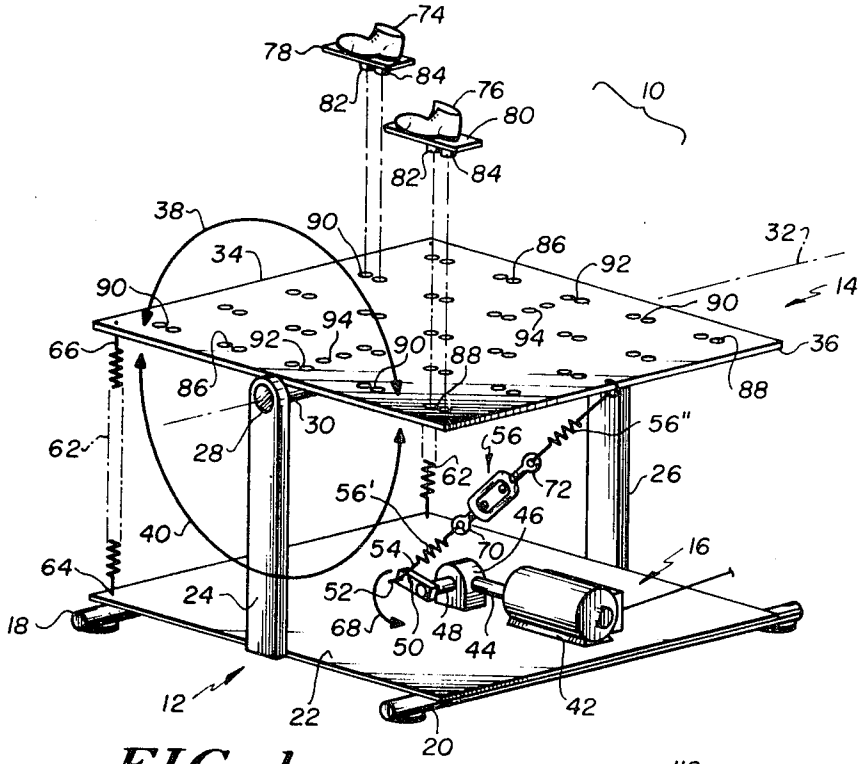

FIG. 1

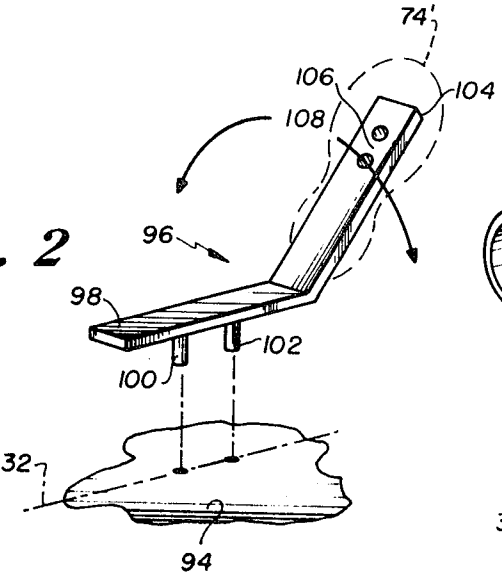

FIG. 2

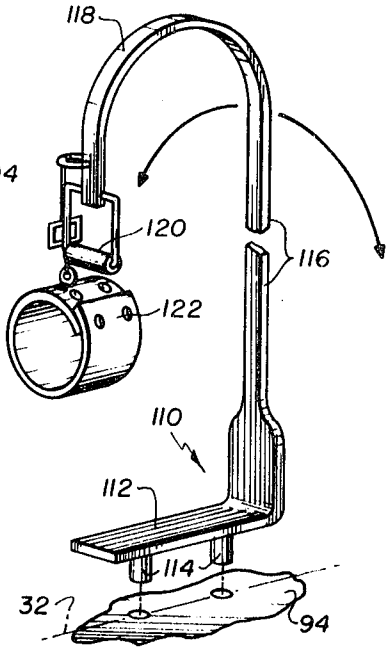

FIG. 3

INVENTOR.
JOSEPH A. RAPOZA

BY

LERNER, DAVID & BEHR
ATTORNEYS

United States Patent Office

3,605,732

Patented Sept. 20, 1971

3,605,732

EXERCISING DEVICE

Joseph A. Rapoza, 148 De Kalb Ave.,
Jersey City, N.J. 07306

Filed Sept. 10, 1969, Ser. No. 856,569
Int. Cl. A61h *29/00*
U.S. Cl. 128—25B 9 Claims

ABSTRACT OF THE DISCLOSURE

An exercising device which includes a base and a planar support surface pivotally supported above the base on an axis which permits the planar support surface to experience oscillatory motion when driven by an electric motive system positioned therebeneath. Foot retaining members are removably securable to the planar support surface at any one of a plurality of locations disposed thereon whereby with proper placement, preselected areas and muscles of a patient's feet and legs may be exercised. Preferably one or more of such locations straddles the oscillatory axis of the planar support surface whereby true dorsiflexion action of the human foot can be achieved. Additionally, one or more of such locations lie on the oscillatory axis of the planar support surface whereby with the aid of additional brackets, the foot may be subjected to an eversion-inversion action or the arm of the patient may be subjected to reciprocating rotative movement about the shoulder.

BACKGROUND OF THE INVENTION

This invention relates to exercising devices and more particularly to a leg exercising device which includes a foot supporting planar surface driven in an oscillatory path of motion.

For many patients who have suffered fractures, strokes, polio, neuropathy, polyneuritis etc., rehabilitation through exercise represents a significant mode of treatment. Accordingly, in recent years there has been great emphasis by the medical profession on physical therapy and great strides have been taken in the design of various types of exercising devices by which such therapy can be practiced.

In the field of leg exercising devices, to which the instant invention most pertinently relates, the typical leg exercising device includes one or more foot rests which are pivotally secured along an axis positioned at the heel and thereof and driven in a reciprocating path of motion by appropriate driving mechanism. A prime example of this type of construction is U.S. Pat. 3,318,304 issued May 9, 1967 to V. Gurewich in which the foot supporting platform reciprocates about an axis **21** positioned at the "heel end" thereof. Unfortunately, and although this type of unit is the prevailing structure used today, it has many disadvantages which to a great extent limits its application.

For example, in the Gurewitch type of device, there is one primary foot position; and that position is located relatively close to the pivotal axis of the foot support platform. The net result of this type of construction is that only the ankle is flexed as the foot platform is reciprocated with very little exercising action being extended to other parts of the leg such as the knee, the quadriceps or the hamstring muscles. Furthermore, even if by design

the Gurewich type of construction were modified to provide a larger moment arm with respect to the pivotal axis, the larger range of leg elements exercised would only be achieved by sacrificing to a great extent the flexing of the ankle. To put it in other words, a primary deficiency in prior art exercising devices, is their inability to be easily adapted to perform prescribed exercises on prescribed portions of the patient i.e., they cannot be tailored to the specific patient to produce the specific exercises which that patient requires.

A second disadvantage inherent in the Gurewich type of construction and indeed in virtually all prior art type devices of this type, stems from the fact that as noted, the pivotal axis for the foot support surfaces thereof is located at one end, usually the heel end, of the foot supporting platform such that pivotal axis point is behind the heel of the foot when the foot is rested on the platform. Consequently, when the foot platform is reciprocated, only the forwardmost elements of the ankle are flexed and there is a severely restricted heel cord action. A simple example of this action is to place one's foot on the floor, raise the toes and note the restricted heel cord action. If one's foot is raised off the floor, and the toes are then raised, one will note substantially greater freedom, and significant heel cord action.

Finally, leg exercising devices of the type illustrated in Gurewich are severely limited in application in the sense that they are specifically designed for ankle movement in only one degree of freedom and furthermore have no application to other parts of the body such as for example providing rotative exercises for the arm.

SUMMARY OF THE INVENTION

In contradistinction to the prior art, the instant invention provides an exercising device which is simple, inexpensive to manufacture, easy to use and by virtue of its expanded capabilities, eliminates those problems which are inherent in the prior art devices over which the instant invention is intended to be an improvement.

As will be described in greater detail, the instant invention includes a base and a planar support surface pivotally supported above the base on an axis which lies intermediate opposite edges thereof such that oscillatory motion thereof is described when the planar support surface is driven by a driving system positioned therebeneath. A pair of foot retaining members are removably securable to the planar support surface at any one of a plurality of locations disposed thereabout. Various ones of these locations are situated at varying distances from the axis of oscillation whereby different types and degrees of exercises may be preselectively chosen in accordance with the particular patient and his exercising needs. This choice of location of the foot retaining members with respect to the axis of oscillation, overcomes one of the basic deficiencies of the prior art devices namely, their inability to be tailored to the particular patient.

In accordance with further aspects of the instant invention others of the preselected foot retaining locations are disposed so as to straddle the aforementioned axis of oscillation. In this manner, and much in the manner of the previously described toe exercising example, true dorsiflexion of the angle may be achieved.

Finally, other foot retaining locations are established along the aforementioned axis of oscillation whereby and as will be further described, with the aid of appropriately

designed brackets, a second degree of rotative freedom for the ankle may be established, while additionally the exercising device of the instant invention may be extended to exercise other portions of the body such as the arm.

Accordingly, it is an object of the instant invention to provide an exercising device which has far greater application than prior art devices over which the instant invention is intended to be an improvement.

Another object of the instant invention is to provide such an exercising device which includes an oscillating foot supporting platform.

Still another object of the instant invention is to provide such an exercising device which includes foot retaining members selectively positionable at any one of a plurality of locations disposed on the aforementioned planar foot supporting platform.

Yet another object of the instant invention is to provide such an exercising device in which various ones of the aforementioned locations are disposed at various distances from the axis of oscillation of the aforementioned foot supporting platform whereby various degrees of exercise for various portions of the human leg can be established.

Still another object of the instant invention is to provide such an exercising device in which various other ones of the aforementioned locations straddle the aforementioned axis of oscillation whereby true dorsiflexion action of the ankle may be established.

Another object of the instant invention is to provide such an exercising device in which still other of the aforemention locations are disposed along the axis of oscillation whereby with the aid of appropriately designed brackets, a second degree of ankle rotation is made possible and at the same time the exercise device can be applied to other portions of the body such as the arm.

Other objects of the invention invention and a further understanding thereof may be had by referring to the following specification and drawings in which:

FIG. 1 is a perspective view of the exercising device of the instant invention;

FIG. 2 is a perspective view of an ankle bracket which may be used in conjunction with the apparatus of FIG. 1; and

FIG. 3 is a perspective view of an arm attachment which may be used in conjunction with the apparatus of FIG. 1.

Turning to the figures, there is shown in FIG. 1, the exercising device **10** of the instant invention. Broadly speaking, the device **10** includes four main portions: the base **12**; the planar support surface **14**, the driving mechanism **16** and the foot retaining members **74**, **76**.

In its preferred form, the base **12** includes a pair of outstanding tubular rods **18** and **20** on which is rigidly secured a planar member **22**. Approximately mid-way along opposite edges of the planar member **22** are rigidly provided a pair of upstanding arms **24** and **26**. The upper ends of the arms **24** and **26** are provided with apertures **28** (only one of which is visible in FIG. 1) in which are journaled for rotation of the opposite ends of an axle **30** secured to the undersurface of the planar foot supporting member **14**.

Of course, if desired the axle **30** could be rigidly secured at its opposite ends to the upstanding arms **24** and **26** and the planar support member **14** could be rotatably secured to the axle **30** for example by means of depending U-shaped clips. The mode of attachment is not critical, the only requirement being that the planar support member **14** be rotatably carried with respect to the base broadly designated **12**. What is required to practice the instant invention, however, is that the axis designated **32** defined by the axle **30** lie intermediate the opposite edges **34** and **36** of the planar support member **14** such that this member will describe an oscillatory path of motion (depicted by the arrows **38** and **40**) when the platform **14** is driven by the driving system **16**.

The drawing mechanism **16** includes an electric motor **42**, the output shaft **44** of which is "right angle turned" and speed reduced by the speed reducer **46** to drive a shaft **48** on which is rigidly secured a crank arm **50**. Secured to a dowel **52** provided on the outer end of the crank arm **50** is one end **54** of a yieldable spring means **56** the opposite end **58** of which is secured to the planar support member **14** approximately mid-way along the edge **36** thereof. Disposed intermediate the ends **54** and **58** of the yieldable spring means **56** in a range adjustment turnbuckle **60** which in a manner to be further described, may be used to preselectively shorten or lengthen the yieldable spring means **56**.

The remainder of the driving mechanism **16** is defined by one or more return springs **62** one end of which **64** is secured to the base **12** while the opposite end **66** is secured to the planar support member **14** preferably along the edge **43** thereof.

It will be appreciated that as the electric motor **42** causes the rotation of the crank arm **50** (in the direction depicted by the arrowhead **68**), the planar support platform **14** will rotate clockwise as viewed in FIG. 1 about the axis **32**. Simultaneously the return spring **62** will be stretched. Finally, when the line of action of the yieldable spring means **56** passes over center with respect to the shaft **48**, clockwise rotation of the planar support member **14** will cease, and the now stretched return spring **62** will rotate the planar support platform **14** in a counterclockwise direction as viewed in FIG. 1 about the axis **32**, with such counterclockwise rotation continuing until such time as the line of action of the yieldable spring means **56** once again passes over center to begin a new cycle of clockwise rotation. Thus, it will be appreciated that the planar support platform **14** will in fact describe an oscillatory path of motion as the driving mechanism **16** operates. To vary the extent of oscillation the turnbuckle **60** may be rotated such that the screw threaded terminations **70** and **72** of the spring segments **56'** and **56''** will approach each other to shorten the overall length of the yieldable spring means **56**. Rotation of the turn buckle **60** in the opposite direction will elongate the yieldable spring means **56**. It will be appreciated that the length of the yieldable spring means **56**. Rotation of the turn- or oscillation that the planar support member **14** will experience.

To be used in conjunction with the device **10** are a pair of foot retaining members **74** and **76** preferably in the form of shoes into which a patient's feet can be placed and appropriately retained by way of straps, laces, buckles, etc. The shoes **74** and **76** are secured to base plates **78** and **80** respectively from the undersurfaces are provided downwardly extending pairs of stud-like members **82** and **84**. Preferably, such members **82** and **84** are externally threaded so as to receive butterfly-type wing nuts (not shown) after these stud-like members are passed through the about to be described pairs of apertures in the planar support member **14**.

As seen in FIG. 1, there are disposed at various locations on the planar support member **14** numerous pairs of apertures such as **86**, **88**, **90** and **92**, the apertures of each pair being spaced apart by the same distance as the stud-like members **82** and **84**. Thus it will be appreciated that the foot retaining members **74** and **76** can be positioned at any one of the variety of locations defined by the pairs of apertures such as **88–92**. For example the left foot retaining member **76** could be positioned such that its depending projections **82** and **84** pass through the pair of apertures **88** while the "right" foot retaining member **74** could be positioned such that its depending projections **82** and **84** pass through the pair of apertures **90**. In this example, and assuming that the patient's feet were strapped into the appropriate foot retaining member **74** and **76**, when the planar support platform **14** were oscillated by the driving mechanism **16**, there would result a bicycle type of exercise in which the achilles and peroneous of both the right and left ankle would be alternately stretched and contracted, and all muscles of both legs up

to the hips and including the glutal muscles would be gently exercised.

Of course, if desired, the positions of the left and right foot retaining members **74** and **76** can be reversed; alternatively, both foot retaining members **74** and **76** can be placed on the same side of the axis **32** (at different distances from the axis if so desired) and/or both foot retaining members **74** and **76** may be laterally displaced to parallel rows of apertures if it is desired or felt necessary for the particular patient. It is to be emphasized that the multiplicity of locations defined on the planar support surface **14** adds great flexibility to the instant invention and allows the therapist to establish the proper kind and degree of exercise for the particular patient in accordance with the affliction he may be suffering.

It is also to be appreciated that should one or more of the foot retaining members **74** or **76** be secured to the planar support surfaces **14** through the pairs of apertures designated **92**, the foot retaining member will thereby straddle the axis **32** in which situation there will be a true dorsiflexion of the foot since the oscillation axis **32** will pass through the true flexion point (the mallaleous) of the human foot.

In addition to the above described pairs of apertures exemplified by the designations **86**, **88**, **90** and **92**, it will be seen that there are additional pairs of apertures designated **94** which pairs of apertures lie on the axis of oscillation **32**. The purpose of these pairs of apertures **94** may best be understood by referring to FIGS. 2 and 3.

Thus in FIG. 2, there is provided an angled bracket **96** one leg **98** thereof being provided with a pair of downwardly projecting stud-like members **100** and **102** which are so spaced as to be received by the pair of apertures **94** along the axis of oscillation **32**. The second leg **104** of the bracket **96** includes a pair of apertures **106** which are so spaced as to receive the downwardly projecting studs **82** and **84** of the foot retaining members **74** and **76** as depicted in phantom by the notation **74'** in FIG. 2. Thus it will be appreciated that with the adapting bracket **96** of FIG. 2, it is possible to exercise the ankle of a patient in a second degree of movement as suggested by the arrows **108** in FIG. 2. This type of motion is known as eversion-inversion movement.

Finally, in FIG. 3, there is shown a bracket **110** one leg **112** of which is provided with a pair of depending stud-like projections **114** which are adapted to be received by the aperture pair **94** along the axis of rotation **32** of the planar support member **14**. A second elongated leg **116** of the bracket **110** terminates in an arcuate portion **118** having a hand grasping handle **120** and a wrist retaining strap secured thereto. When the patient's hand is placed on the handle **120** (and that position may be retained with the assistance of the wrist strap **122**) it may be seen that the instant invention can be used to cause the raised arm of a patient to swing forward and externally rotate rearward with assistive motion, activating the shoulder muscles, especially the infraspinatis and terez minor muscles which are often not exercised, frequently resulting in an inverted arm (commonly designated an internally rotated arm). The external rotation generated by the instant invention leads to a full range of motion and coordination of all of the shoulder muscles.

Thus it will be appreciated that the instant invention provides an exercising device with much greater applicability than prior art devices. Furthermore by providing an oscillatory path of motion for the foot supporting surface, a variety of different types of exercises can be established in accordance with the needs of the individual patient. Furthermore, by situating the foot retaining members of the device across the axis of oscillation, a true dorsiflexion action may be achieved. Additionally, with the aid of specially designed brackets, the exercising device can be extended to provide additional degrees of exercise for the foot, and other portions of the body such as the arm can be exercised as well.

It will be further appreciated that, if desired the yieldable spring means **56** and the return spring(s) **62** may be disconnected such that the device **10** can be used for passive exercise (i.e., the patient supplying the energy to oscillate the planar support surface **14**).

It will also be appreciated that although the plurality of locations on the planar support member **14** of the instant invention have been shown as defined by pairs of apertures which receive pairs of depending stubs from the foot retaining members **74** and **76**, other structural arrangements can be utilized to achieve the multiplicity of the locations desired. For example, it is within the contemplation of the instant invention that elongated slots be provided on the planar support surface **14** within which the foot retaining members **74** and **76** could be preselectively slid and retained to establish the desired positions on both sides of or straddling the center of the axis of oscillation. Therefore, while the instant invention has been described in detail with reference to the several embodiments shown herein, it will be understood that many variations and modifications thereof may be practiced without departing from the sphere or scope of the invention as defined in the hereattached claims.

I claim:

1. An exercising device comprising:

a base;

planar support means pivotally supported above said base on an axis which is located intermediate opposite edges of said planar support means;

whereby said planar support means may oscillate about said axis;

and further including first foot retaining means removably securable to said planar support means at any one of a plurality of locations thereon.

2. The exercising device of claim **1** wherein at least one of said plurality of locations is disposed on a longitudinal axis which is transversely intersected by the axis upon which said planar support means oscillates;

whereby true dorsiflexion action of a foot is achieved when foot is retained by said foot retaining means at said one of said plurality of locations.

3. The exercising device of claim **2** wherein others of said plurality of locations are disposed on opposite sides of the axis upon which said planar support means oscillates.

4. The exercising device of claim **3** and further including second foot retaining means removably securable to said planar support means at any one of said plurality of locations thereon.

5. The exercising device of claim **4** wherein said first and second foot retaining means each include a pair of depending projections, and said plurality of locations are defined by pairs of apertures in said planar support means which receive said projections.

6. The exercising device of claim **1** wherein at least one of said plurality of locations is longitudinally disposed on the axis upon which said planar support means oscillates.

7. The exercising device of claim **6** and further including angled foot bracket means having one leg thereof removably securable to said one of said plurality of locations which is longitudinally disposed on said axis of oscillation and a second leg adapted to receive said first foot retaining means;

whereby eversion and inversion movement of a foot is achieved when said foot is retained by said foot retaining means.

8. The exercising device of claim **6** and further including arm attachment means having one portion thereof removably securable to said one of said plurality of locations which is longitudinally disposed on said axis of oscillation and a second upstanding portion thereof for attachment to an arm which is to be exercised in an oscillatory manner.

9. The exercising device of claim 1 and further including driving means for oscillating said planar support means about said axis; and

wherein said driving means includes an electric motor having an output shaft, a crank arm connected to said output shaft, and yieldable linking means connected at one end to said crank arm and at its other end to said planar support means at a location disposed one side of said axis.

References Cited

UNITED STATES PATENTS

3,421,760	1/1969	Freeman.	
3,526,220	9/1970	Small et al.	128—25

L. W. TRAPP, Primary Examiner

U.S. Cl. X.R.

272—57D