United States Patent

[11] 3,603,484

[72] Inventor **Robert W. Ogle**
Newport Beach, Calif.

[21] Appl. No. **803,306**
[22] Filed **Feb. 28, 1969**
[45] Patented **Sept. 7, 1971**
[73] Assignee **Mix-O-Matic Corporation**
Wilmington, Del.

[54] **TWO-COMPARTMENT MIXING AND DISPENSING DEVICE**
5 Claims, 18 Drawing Figs.

[52] **U.S. Cl.** **222/94,** 222/90
[51] **Int. Cl.** **B65d 35/22**
[50] **Field of Search** ..... 222/5, 83.5, 92, 94, 90; 132/67; 251/339; 206/47 A

[56] **References Cited**

UNITED STATES PATENTS

1,044,560	11/1912	Morgan et al.	222/90
1,401,968	1/1922	Dorner	222/90
2,527,992	10/1950	Greenberg	206/47
2,559,231	7/1951	Seemar	206/47 X
2,653,611	9/1953	Smith	206/47 X
2,689,566	9/1954	Lockhart	128/233
2,701,886	2/1955	Ivie	222/5 X
3,221,917	12/1965	DeSanto et al.	206/47 X
3,314,563	4/1967	Mounier	206/47 X
3,339,802	9/1967	Weiner et al.	222/94 X
3,347,410	10/1967	Schwartzman	206/47 X

Primary Examiner—Robert B. Reeves
Assistant Examiner—Norman L. Stack, Jr.
Attorney—Finkelstein & Mueth

ABSTRACT: This patent describes a self-contained, two-compartment mixing device comprising an outer container adapted to contain a fluid, and having a fluidtight end closure, an inner container received in said outer container, said inner container having an end closure, said end closure of said inner container facing said end closure of said outer container to isolate the contents of the inner container from the contents of the outer container. In a preferred embodiment of this invention, the end closure of the outer container is provided with a projection having cutting terminal surfaces extending from said end closure inwardly into said outer container, said sharp projection having cutting terminal surfaces being adapted to be compelled toward and through the end closure of said inner container by longitudinal compression of said outer container to establish fluid communication between said inner and outer containers.

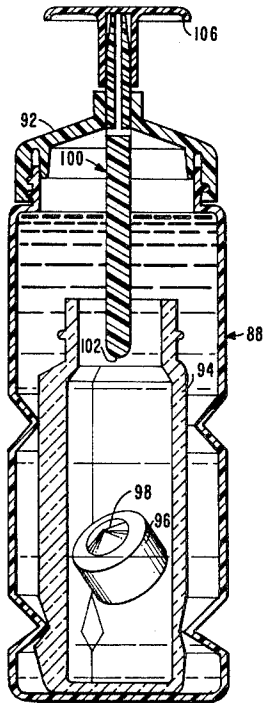

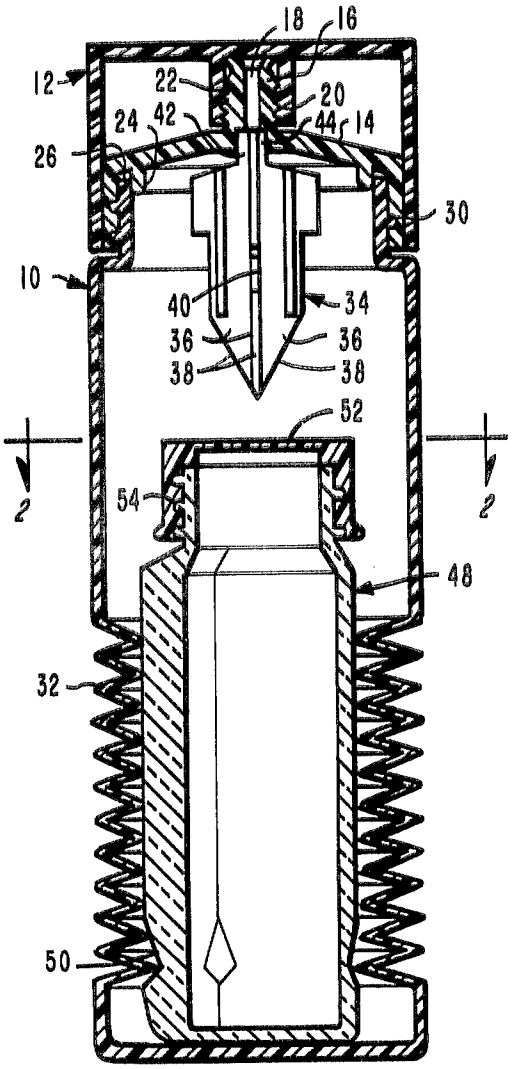

FIG.-1

FIG.-6

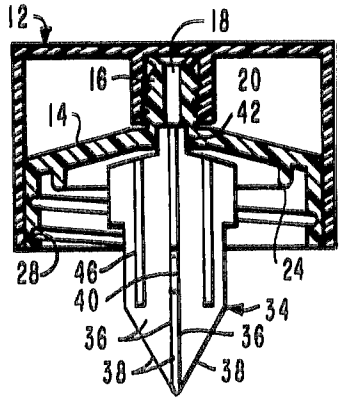

FIG.-7

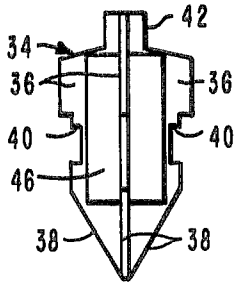

FIG.-8

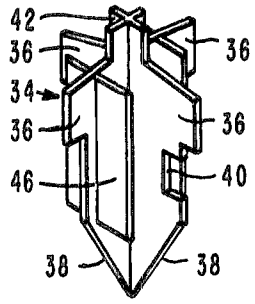

FIG.-5

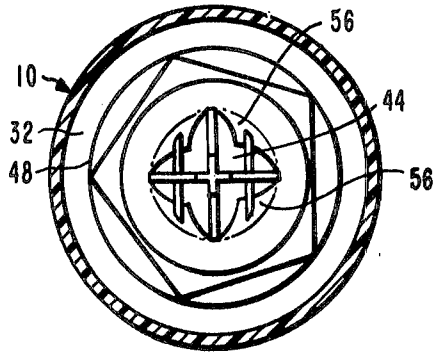

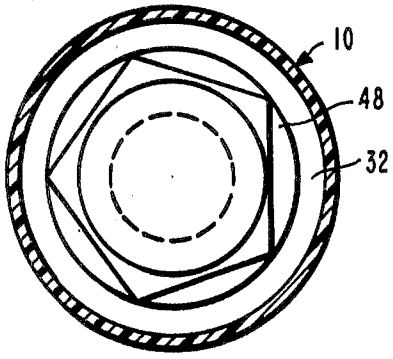

FIG.-2

INVENTOR
ROBERT W. OGLE

BY Lyon & Lyon
ATTORNEYS

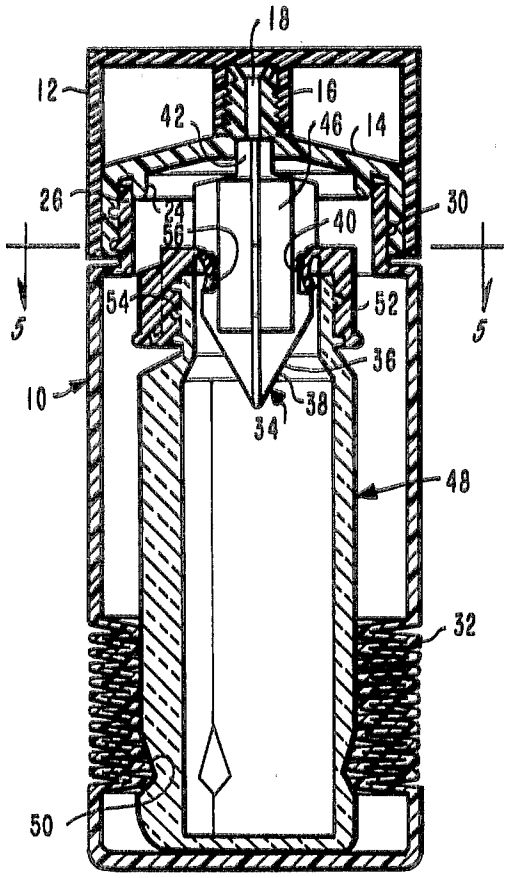

FIG.-3

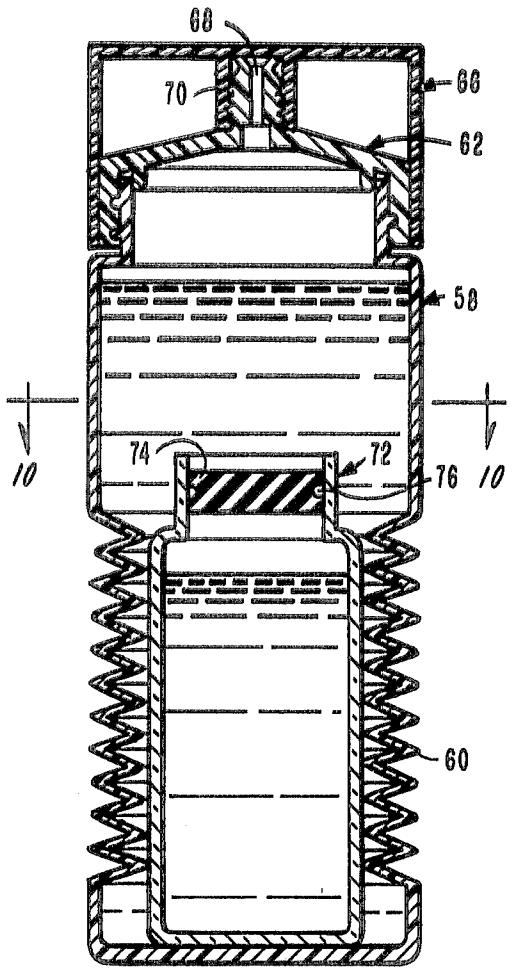

FIG.-9

INVENTOR
ROBERT W. OGLE
BY
Lyon & Lyon
ATTORNEYS

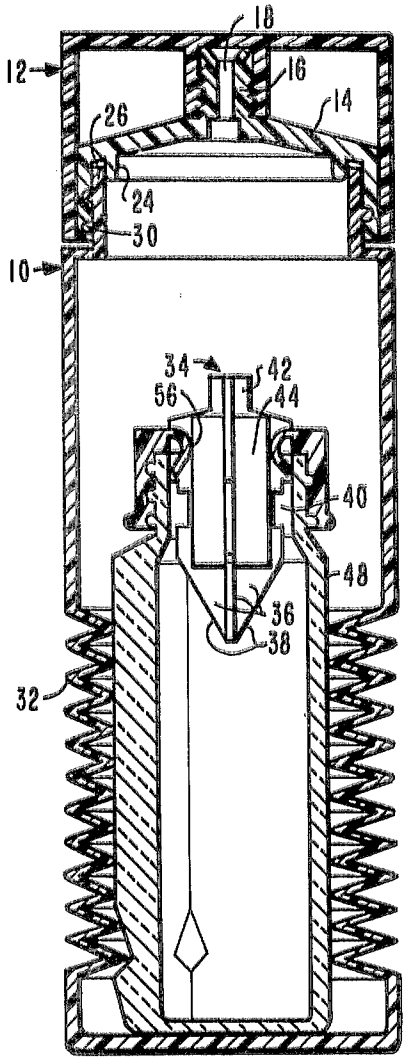

FIG.-4

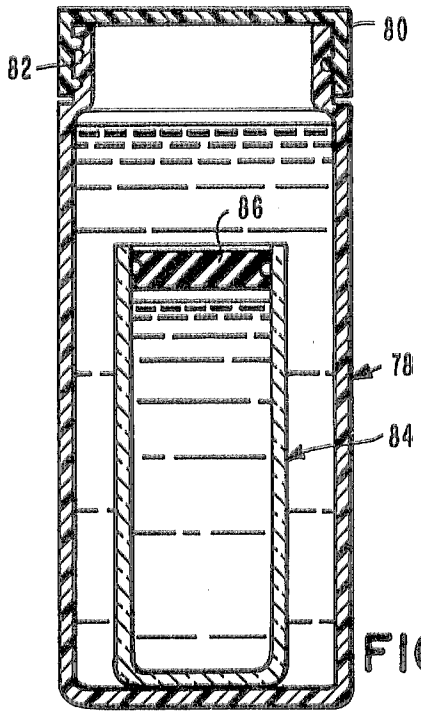

FIG.-13

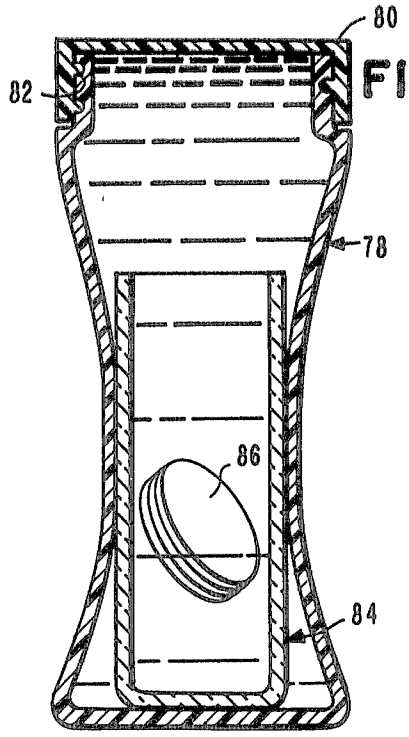

FIG.-14

INVENTOR
ROBERT W. OGLE

BY Lyon & Lyon
ATTORNEYS

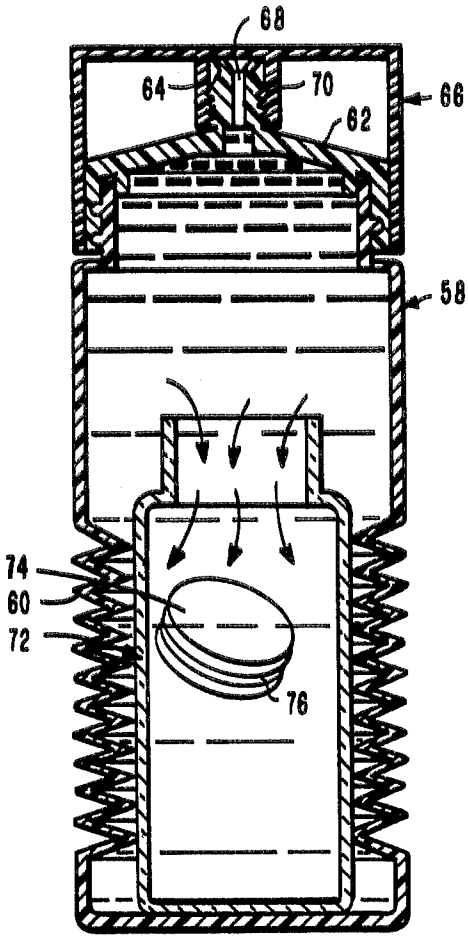

FIG.-11

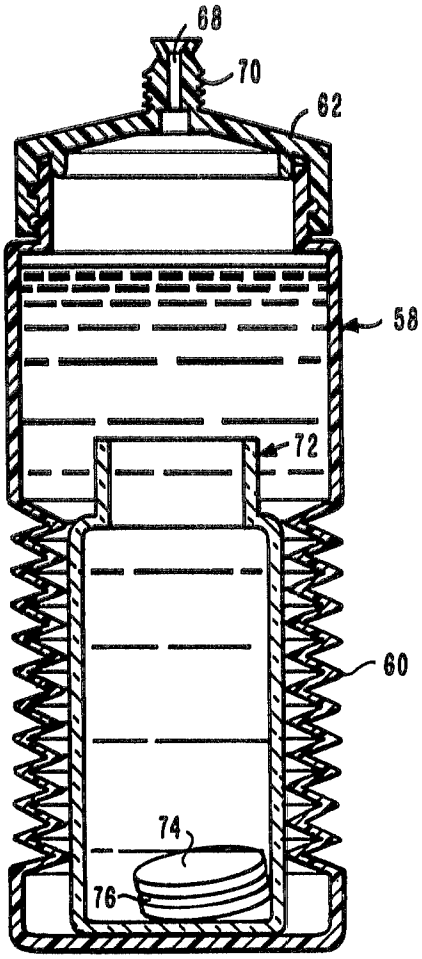

FIG.-12

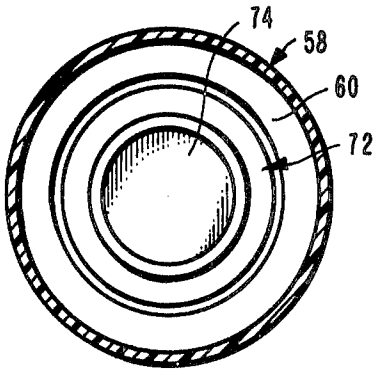

FIG.-10

INVENTOR
ROBERT W. OGLE
BY
Lyon & Lyon
ATTORNEYS

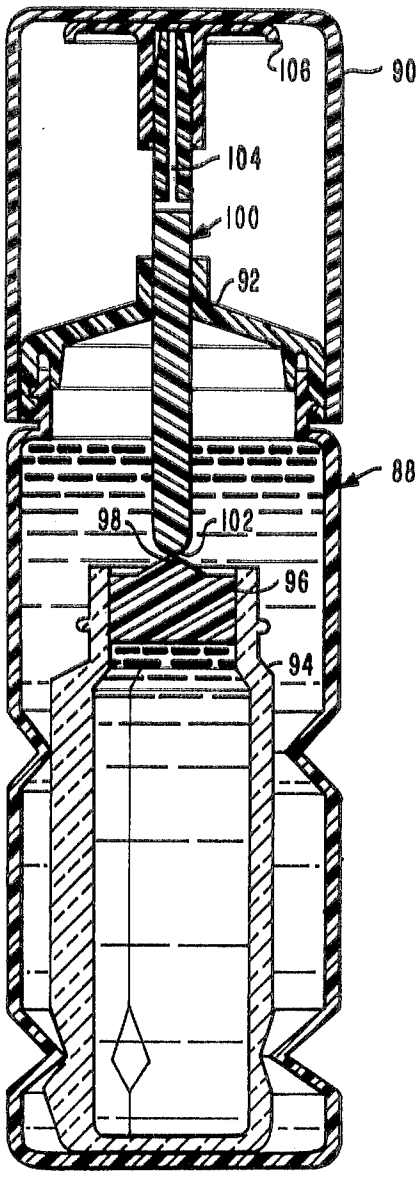

FIG.-15

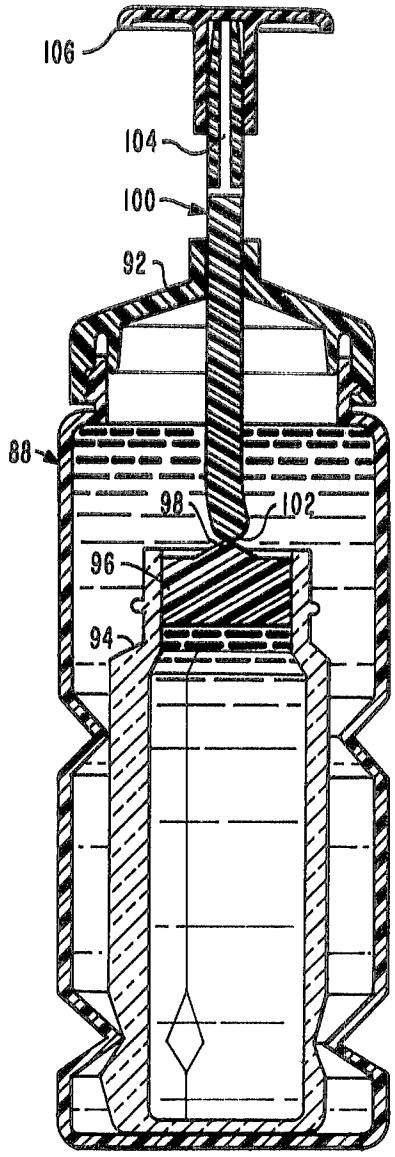

FIG.-16

INVENTOR.
ROBERT W. OGLE
BY Lyon & Lyon
ATTORNEYS

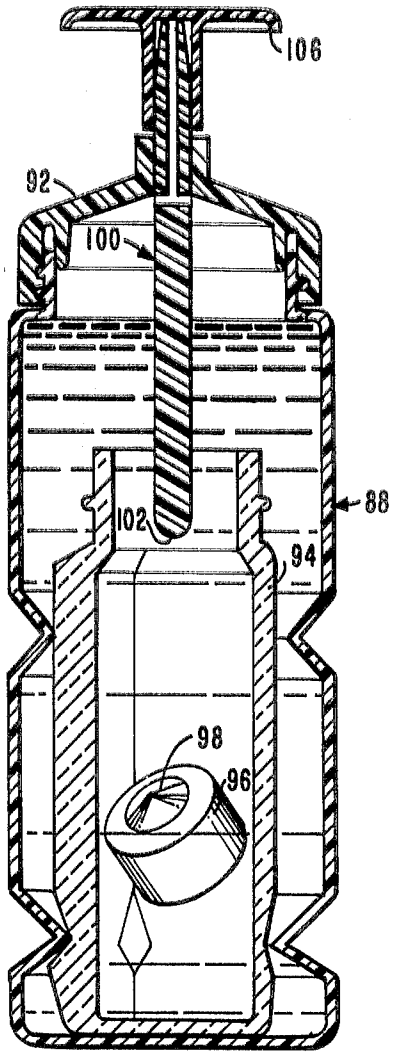

FIG.—17

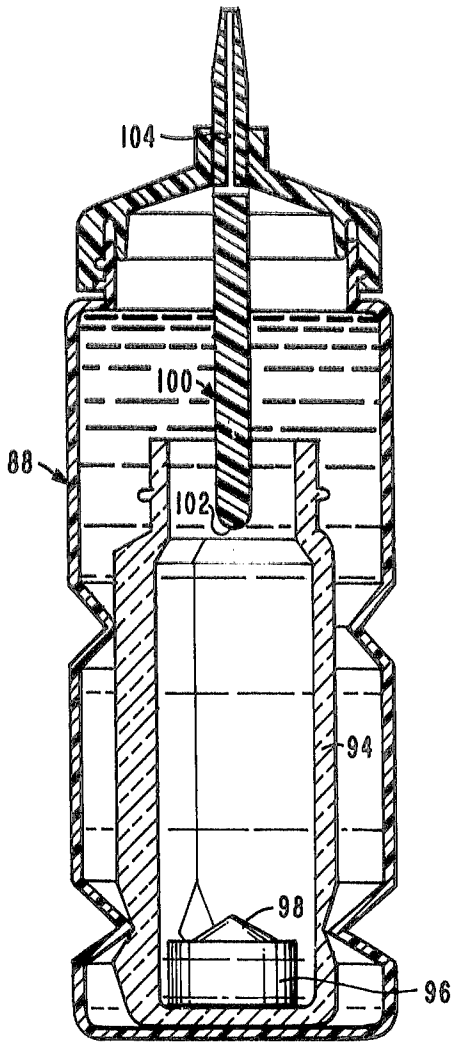

FIG.—18

INVENTOR
ROBERT W. OGLE
BY Lyon & Lyon
ATTORNEYS

TWO-COMPARTMENT MIXING AND DISPENSING DEVICE

BACKGROUND OF THE INVENTION

The field of this invention relates to self-contained, two-compartment mixing devices particularly adapted for use in the mixing of two normally chemically reactive hair-dying ingredients. However, the device of the present invention is generally applicable to the storage and mixing at the time of use of any two reactive or nonreactive liquids or to the mixing of any liquid and solid.

The most common self-administered type of hair dye on the market at the present time includes an oxidizable dye component. The oxidizable dye component is sold in its unoxidized form and it is necessary just prior to use that an oxidizing agent be admixed with the dye in order to activate the same and render it ready for administration to the hair. Generally, the other dyes available are substantially less reactive with the carotene of the human hair and, therefore, are less effective in dying the hair. For this reason, best results are obtainable only by the use of the oxidizable dye and an oxidizing agent therefor. The need for these two reactive chemicals normally requires two separate storage containers in the package since the materials are not compatible for long periods of time when mixed. At the present time, the two materials are sold in separate bottles. Also provided in the package along with the bottles are directions for the mixing of the contents of the two bottles prior to use. The mixing must be accomplished by the ultimate user who is frequently a person unfamiliar with the handling of reactive chemicals. Still further, the customer for this type of product is normally not attracted to and, in fact, may be repelled by the need for the mixing and handling of such materials. Still further, there are certain hazards present including the splashing of the oxidizing agent on the clothing, into the eyes, and the like. For all of these reasons, there has been a long-recognized and unsatisfied need for a simple-to-operate, self-contained, two-compartment mixing device particularly adapted for the handling of an oxidizable dye and the oxidizing agent. The present invention, it is believed, fulfills this need by providing a device which is easy to operate, inexpensive to manufacture, and completely eliminates the need for the handling of reactive chemicals by inexperienced persons thereby doing away with the hazards discussed above.

SUMMARY OF THE INVENTION

Briefly, the present invention comprises a novel self-contained, two-compartment mixing device comprising an outer container adapted to contain fluid and having a fluidtight end closure, an inner container received in said outer container, said inner container having an end closure, said end closure of said inner container facing said end closure of said outer container to isolate the contents of the inner container from the contents of the outer container, means associated with said outer container for establishing fluid communication between said inner and outer containers to provide mixing of the contents of said containers without removing said end closure of said outer container.

In one preferred embodiment of this invention, the end closure of the outer container is provided with a spout means slidable therethrough, the inner end of said spout means being adapted to dislodge the end closure of said inner container and the opposite end of said spout means has fluid passages therein.

In another embodiment, the present invention comprises a novel self-contained, two-compartment mixing device comprising an outer container adapted to contain fluid and having a fluidtight end closure, an inner container received in said outer container, said inner container having an end closure, said end closure of said inner container facing said end closure of said outer container to isolate the contents of the inner container from the contents of the outer container, the walls of said outer container being longitudinally and/or laterally compressible whereby upon compression of said outer container, fluid communication is established between said inner and outer containers to provide mixing of the contents of said containers. In yet another embodiment of this invention, the end closure of the outer container is provided with a sharp projection having cutting terminal surfaces extending from said end closure inwardly into said outer container, said sharp projection having cutting terminal surfaces being adapted to be compelled toward and through the end closure of said inner container by longitudinal compression of said outer container to establish fluid communication between said inner and outer containers.

It is an object of the present invention to provide a self-contained, two-compartment mixing device particularly adapted for the handling of reactive, toxic and/or noxious chemicals.

More specifically it is an object of the present invention to provide a novel self-contained, two-compartment mixing device adapted to contain an oxidizable hair dye and the oxidizing agent therefor wherein these two materials can be separately stored for prolonged periods and simply mixed at the time of use without the need for any exposure of either material to the danger of spillage or splashing.

Still another object of the present invention is the provision of a two-compartment mixing device which permits the ready mixing of reactive chemicals in a closed system to thereby appeal to inexperienced users of such materials.

These and other objects and advantages of this invention will be apparent from the more detailed description which follows taken in conjunction with the accompanying drawings.

DESCRIPTION OF THE PREFERRED EMBODIMENTS

Turning to the drawings:

FIG. 1 is a sectional side view of the preferred embodiment of the present invention;

FIG. 2 is a cross section taken along the line 2—2 in FIG. 1;

FIG. 3 is a sectional side view of the device of FIG. 1 after the outer container has been longitudinally compressed to communicate the contents of the inner and outer container;

FIG. 4 is a sectional view of the device of FIG. 1 after communication has been established between the inner and outer containers;

FIG. 5 is a cross section taken along the line 4—4 in FIG. 4;

FIG. 6 is a separate partially sectioned view of the end closure and projection for the outer container of the device shown in FIG. 1;

FIG. 7 is a side view of the projection from the closure for the outer container;

FIG. 8 shows the projection of FIG. 7 rotated approximately 45°;

FIG. 9 is a sectional side view of another embodiment of the present invention;

FIG. 10 is a cross section taken along the line 10—10 in FIG. 9;

FIG. 11 shows the device of FIG. 9 in longitudinal compression to dislodge the end closure on the inner container;

FIG. 12 shows the device of FIG. 9 after fluid communication has been established between the inner and outer containers;

FIG. 13 shows a sectional side view of yet another embodiment of this invention;

FIG. 14 shows the device of FIG. 13 in lateral compression to establish fluid communication between said inner and outer containers;

FIG. 15 shows a sectional side view of another embodiment of the present invention;

FIG. 16 shows the operation of the device of FIG. 15 in an initial stage;

FIG. 17 shows the device operation; FIGS. 15 and 16 in a subsequent stage of operation; and

FIG. 18 shows the operation of the device of FIGS. 15–17 with the parts disposed in a manner adapted for dispensation of the fluid contents.

Turning to the drawings in greater detail, the outer container **10** is provided with an outer cover **12**. Within the cover **12** is end closure **14**. Closure **14** is provided with dispensing spout **16** having a fluid passage **18**. The external threads **20** on spout **16** engage internal threads **22** inside cover **12**. Closure **14** also has a lip **24** which engages and forms a seal on the upper end **26** of container **10**. The closure **14** has female threads **28** which make up with the male threads **30** on the exterior of container **10**. The outer container **10** is longitudinally compressible as a result of the plurality of accordionlike undulations **32**, and is normally made of a resilient plastic such as polyethylene. The end closure **14** is provided with projection **34** having four cutting blades **36** each having terminal sharp edges **38**. Each blade **36** also has notches **40** therein which engage flaps formed by the blade **36** and retains the blade after fluid communication has been established, as is more fully hereinafter explained. The upper extension **42** on projection **34** is received in opening **44** of closure **14** with a snug, slip fit so that a relatively slight force can remove projection **34** from closure **14**. The projection **34** is also provided with four flap restraining or depressing means **46**. The inner container **48** is normally made of glass or a plastic. As can be seen in FIG. **2**, the container **48** is preferably pentagonal in cross section. However, the cross-sectional configuration of the inner container is by no means critical. Container **48** is provided in proximity to its closed end with indentations **50** in each of its five longitudinal edges. The indentations **50** are adapted to receive the inner edge of the bottom most of the accordionlike undulations **32** with a snap fit. In this way the container **48** is restrained from longitudinal movement with respect to the outside container **10** during handling and shipping. Inner container **48** is provided at its opened end with pierceable cap **52** held in place by threads **54**.

In the operation of the device shown in FIGS. **1** through **8**, the hair dye is normally stored in one container and the oxidizing agent in the other container and the parts assembled in the fashion as shown in FIG. **1**. When it is desired to admix the two ingredients, the user simply compresses the package in an accordionlike fashion as shown in FIG. **3** to cause the projection **34** with its sharp cutting edges **38** to pierce the cap **52** on the inner container **48**. The flap-restraining means **46** hold the flaps **56** cut out by the sharp projection in an open position as shown in FIG. **3** to permit good fluid communication and mixing of the contents of the inner and outer containers. The notches **40** on blades **36** can engage flaps **56** so that when the longitudinal compression force is released as shown in FIG. **4**, the extension **42** slips from opening **44** and the projection **34** remains in the inner container **48**. Hereafter, the end closure **14** is removed and the contents of the device dispensed through the fluid passage **18** in spout **16**.

Turning to the alternate embodiment shown in FIGS. **9** through **12**, the outer container **58** is provided with accordionlike undulations **60**. The container **58** is provided with end closure **62** covered by outer cap **66**. The closure **62** is provided with a fluid passage **68** in the threaded connection **70**. The inner container **72** is provided with a plug **74** provided with sealing ring **76**. In the operation of this device, when the outer container is partially or totally filled with fluid, the plug **74** may be dislodged from the inner container **72** in the manner shown in FIG. **11** simply by applying a longitudinally compressive force to the outer container **58**. The hydraulic action of the fluid in the outer container on the plug dislodges the plug. Thereafter the outer cap **66** is removed and the mixed contents of the device dispensed through fluid passage **68**.

The device of FIGS. **13** and **14** represent a much simplified form of the invention which is adequate for the simple mixing of many chemicals, although it obviously cannot perform all of the functions of the devices previously discussed. In FIGS. **13** and **14**, laterally compressible container **78** is provided with end closure **80**. The fluidtight seal is provided by complementary threads **82**. The inner rigid container **84** has a sealing plug **86** which is dislodgeable into the container **84** by hydraulic pressure. Fluid communication is established simply by squeezing container **78** as shown in FIG. **14**.

In FIGS. **15** through **18**, inclusive, there is shown still another and preferred embodiment of this invention. In these Figures, the outer container **88** is provided with an outer cover **90** and an end closure **92**. The inner container **94** is provided with an end closure **96** having a centrally located raised portion **98**. Passing through end closure **92** is spout means **100**, the lower rounded end **102** thereof being adapted to contact said raised portion **98** of said closure **96**. The other end of said spout means is provided with fluid passages **104**. The spout means **100** fits snugly but slidably in the opening in end closure **102**. The fit is snug enough to provide a fluidtight seal, and yet permit downward movement through end closure **102** under a reasonable force. The spout means **100** will not slide through end closure **102** under gravitational force alone, and hence the fit may be referred to as a "force fit." During the storage and in the initial phase of operation, the end of spout means **100** is provided with a plunger cap **106**. Initially, the device has the appearance shown in section in FIG. **15**. In operation, the outer cover **90** is first removed and downward pressure is applied on the plunger cap **106** to cause the end **102** of spout **100** to contact the raised potion **98** and dislodge the plug **96** into the interior of container **94** as shown in FIG. **17**. Thereafter, the plunger cap **106** is removed leaving the fluid passages **104** in contact with the interior of the outer container. In this way, the mixed fluid contents can be dispensed through passages **104**.

Those skilled in the art will immediately recognize that the device of the present invention is applicable to the mixing of a wide variety of liquid and liquid-solid combinations of reactive and nonreactive materials. Accordingly, while the invention has been described with particular reference to the application of the mixing of an oxidizable dye with an oxidizing agent it is to be understood that the invention is not limited thereto but envisions the use of the device in the mixing of a wide variety of chemicals, medicaments, and other consumer and industrial products.

The rigid and compressible containers which have been described can be molded or otherwise formed from a wide variety of materials which will be evident to those skilled in the art.

The outer container of this invention is compressible longitudinally or laterally, preferably the former. As will be evident from the foregoing, the outer container may at once be both longitudinally and laterally compressible.

Having fully described the invention it is intended that it be limited only by the lawful scope of the appended claims.

I Claim:

1. A self-contained, two-compartment mixing device comprising an outer container adapted to contain fluid having a fluidtight end closure, an inner container completely received in said outer container, said inner container having an end closure, said end closure of said inner container facing said end closure of said outer container to isolate the contents of the inner container from the contents of the outer container, the end closure of said outer container being provided with a spout means slidable therethrough whereby upon said spout means being slid through said end closure of said outer container, the end closure of said inner container is at least partially dislodged into the interior of said inner container and fluid communication is established between said inner and outer containers to provide mixing of the contents of said containers.

2. A self-contained, two-compartment mixing device comprising an outer container adapted to contain fluid having a fluidtight end closure, an inner container completely received in said outer container, said inner container having an end closure, said end closure of said inner container facing said end closure of said outer container to isolate the contents of the inner container from the contents of the outer container, a dispensing spout slidably disposed through said end closure, an outer cover on said dispensing spout and said end closure and sealing on said outer container, the outer end of said dispensing spout being covered by a removable plunger cap, said spout being adapted to be downwardly slid through said

end closure by pressure on said plunger cap whereby the lower end of said spout at least partially dislodges the closure of said inner container into the interior of said inner container to establish fluid communication between said inner and outer containers to provide mixing of the contents of said containers, said plunger cap being removable to permit the dispensation of the mixed contents through said dispensing spout.

3. A self-contained, two-compartment mixing device comprising an outer container adapted to contain fluid having a fluidtight end closure, a projection having cutting terminal surfaces and flap-restraining means extending from said end closure inwardly into said outer container, an inner container completely received in said outer container, said inner container having an imperforate end closure, said end closure of said inner container facing said end closure of said outer container to isolate the contents of the inner container from the contents of the inner container, the walls of said outer container being longitudinally compressible whereby upon compression of said outer container said sharp projection is compelled toward and into said imperforate end closure and said restraining means holds open flaps cut in said end closure causing said flaps to project downwardly into the interior of said inner container, said flaps being cut by terminal surfaces of said projection to establish fluid communication between said inner and outer containers to provide mixing of the contents of said containers.

4. A self-contained, two-compartment mixing device comprising an outer container adapted to contain fluid having a fluidtight end closure, a projection having cutting terminal surfaces and flap-restraining means extending from said end closure inwardly into said outer container, said end closure also being provided with an outwardly extending dispensing tip, threadably connected to said tip a removable cap which also forms a seal on said outer container, an inner container completely received in said outer container, said inner container having an imperforate end closure, said end closure of said inner container facing said end closure of said outer container to isolate the contents of the inner container from the contents of the outer container, the walls of said outer container being longitudinally compressible whereby upon compression of said outer container said sharp projection is compelled toward and into said imperforate end closure and said restraining means holds open flaps cut in said end closure causing said flaps to project downwardly into the interior of said inner container, said flaps being cut by terminal surfaces of said projection to establish fluid communication between said inner and outer containers to provide mixing of the contents of said containers.

5. A self-contained, two-compartment mixing device comprising an outer container adapted to contain fluid having a fluid tight end closure, a dispensing spout extending from said end closure, a cover encasing said spout and said end closure and joined to said spout by a threaded connection, a projection comprising blades having cutting terminal surfaces and retaining notches, and flap-restraining means, said projection extending from said end closure inwardly into said outer container, an inner container completely received in said outer container, said inner container having an imperforate end closure, said end closure of said inner container facing said end closure of said outer container to isolate the contents of the inner container from the contents of the outer, the walls of said outer container having a series of flexible undulations in proximity to its closed end to provide longitudinal compressibility of said outer container, whereby upon compression of said outer container said sharp projection is compelled toward and said blades pierce said imperforate end closure, said restraining means holds open flaps cut in said end closure by said cutting terminal surfaces to cause said flaps to project downwardly into said inner container and establish fluid communication between said inner and outer containers to provide mixing of the contents of said containers, and said retaining notches hold said projection in said end closure after release of compression.