United States Patent

[11] 3,587,171

[72] Inventor Roger L. Perry
Lynnfield Center, Mass.

[21] Appl. No. 822,540
[22] Filed May 7, 1969
[45] Patented June 28, 1971
[73] Assignee The Gillette Company
Boston, Mass.

[54] **RAZOR**
20 Claims, 5 Drawing Figs.

[52] **U.S. Cl.** **30/40.1**
[51] **Int. Cl.** **B26b 21/26**
[50] **Field of Search** 30/40.1, 49

[56] **References Cited**

UNITED STATES PATENTS

1,231,215	6/1917	Sterrick	30/40.1
2,116,190	5/1938	Davies	30/49X
3,375,578	4/1968	Nissen	30/40.1

Primary Examiner—Theron E. Condon
Assistant Examiner—E. F. Desmond
Attorney—Willis M. Ertman

ABSTRACT: A safety razor, such as a ladies' razor, in which a shaving length of blade is supported on a flexible blade support platform, with one sharpened edge exposed, and the platform coupled to the razor handle for flexing to vary the curvature of the platform along the shaving length, thereby varying the curvature of the blade edge. The razor may also include adjusting structure for moving the platform between various curvatures and a flexible blade guard or clamp which flexes with the platform.

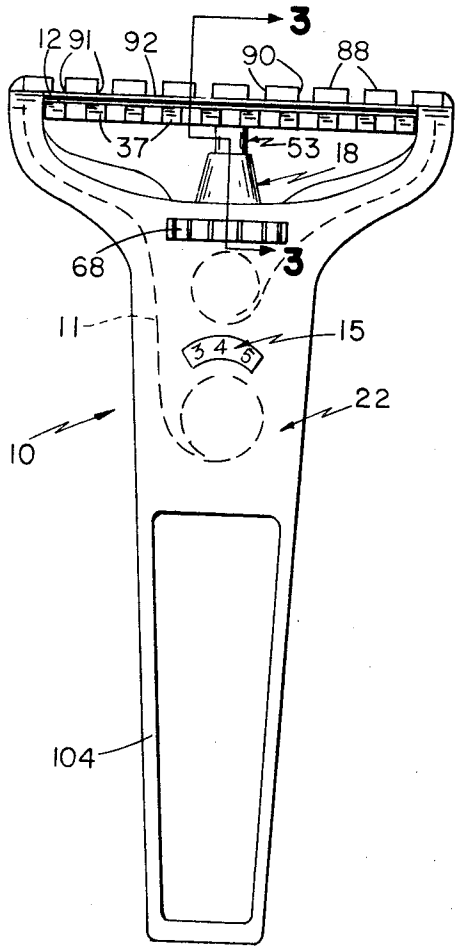

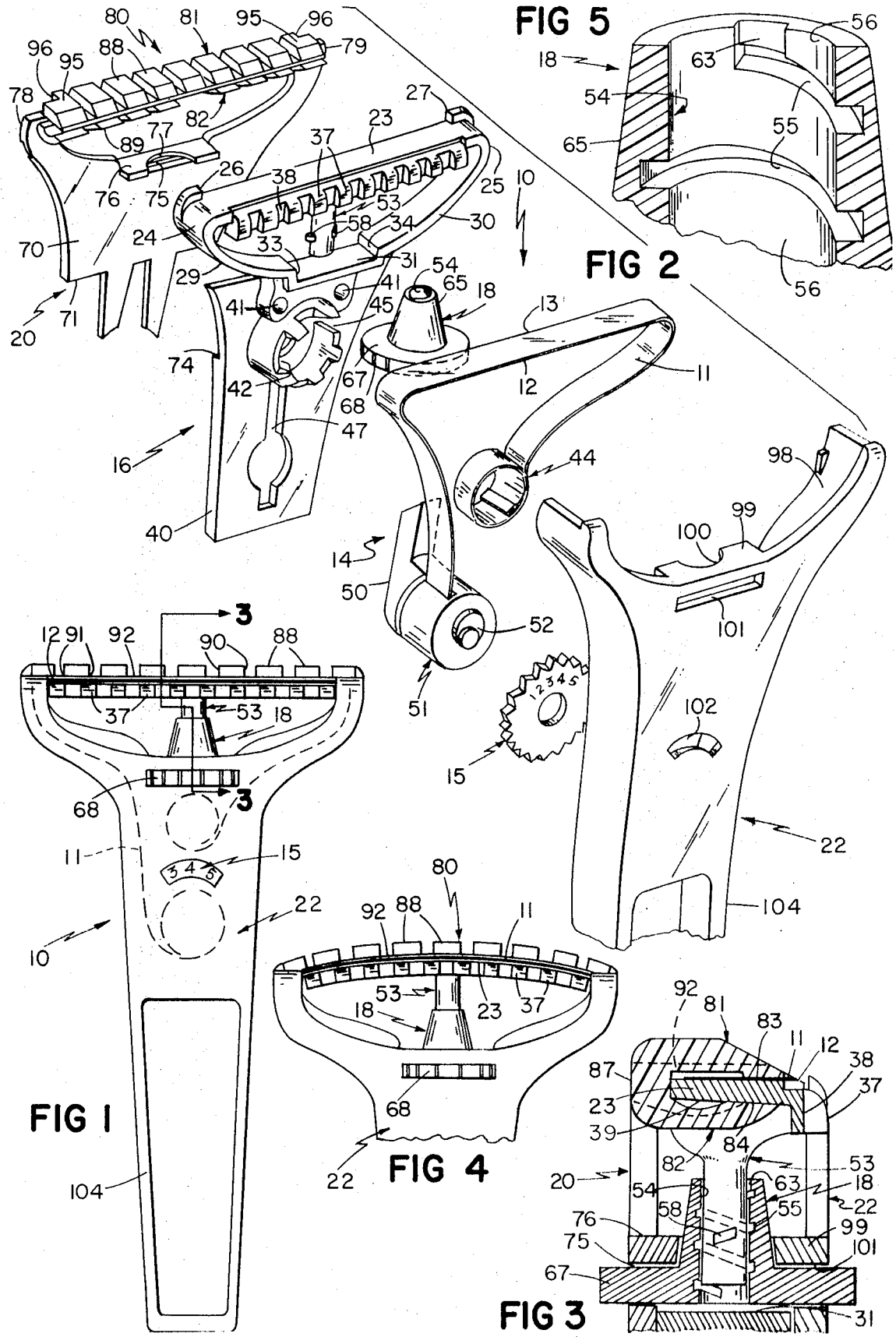
FIG 5
FIG 2
FIG 1
FIG 4
FIG 3

RAZOR

This invention relates to razors.

Conventional facial razors, which present a flat blade edge, are ill-suited for shaving other, differently contoured parts of the body, It has previously been proposed to mount a blade on a rigid convex or concave blade support to provide the necessary contour, but such razors are obviously of limited application, and potentially dangerous where the blade contour does not match the body contour.

It is therefore an object of this invention to provide a razor capable of presenting a plurality of stable convex and concave blade edges to conform to body contours, which is easily adjustable between blade contours, and which includes all the protective features of conventional safety razors.

Another object is to provide a ladies' razor which is continuously and easily adjustable over a wide range of concave to convex blade angles, without removing the blade or any other portion of the razor, which can be made stable at any desired contour, and which is also safe, economical, and of simple, durable, and dependable construction.

Another object is to provide a single-edge razor, or the injector or continuous band type, having an adjustable blade edge for conforming to various body contours.

A further object is to provide a disposable continuous-band razor with an adjustable blade edge.

The invention features a safety razor comprising a handle portion and a flexible blade support platform having a first end and a second end defining a shaving zone therebetween, for supporting a shaving length of blade in said shaving zone with a sharpened end of the blade projecting beyond one edge of the support platform, said flexible blade support platform mounted in said handle portion for flexing between said ends to vary the curvature of the platform and thereby also the curvature of said blade along said shaving length.

In particular embodiments, adjusting structure is coupled between the platform and the handle for changing the curvature of the platform. For example, the blade support platform is flexibly mounted to the handle portion at its ends, and the adjusting structure coupled to the underside and centrally of the platform for raising or lowering the center of the platform relative to its ends.

In a preferred embodiment, the handle includes blade supporting structure having a web portion and a pair of arms flexibly supporting the two ends of the platform on this web portion, the arms being free to flex toward or away from one another as the curvature of the platform is increased or decreased, respectively. The blade support platform and arms may be formed from a single thin flexible (e.g., plastic) strip, having its two ends folded back under the blade support platform and secured to the web portion to form the flexible arms, the radius of curvature of the interior curved surfaces connecting the platform and arms being free to increase with increases in the curvature of the blade support platform. The blade support platform may be of varying dimensions between its center and each end so as to equalize forces along the shaving length (e.g., the bending stresses by making the center thicker than the ends).

In a strip-type razor constructed in accordance with the invention where a ribbonlike length of blade is fed from a blade supply around the blade support and back to a takeup arbor to render successive portions of blade available for shaving, this blade supporting surface and the curved ends thereof define a path of travel for the blade between the supply and the takeup arbor. The blade support platform may also then include guides, such as upstanding flanges at its opposite ends, to preserve alignment of the blade along the platform and to expose a uniform portion of blade edge for each successive shaving portion of blade.

There is also preferably provided in such a single edge razor a blade securing member having a portion contacting the upper blade surface (opposite that lying in contact with the blade support platform) for securing the shaving length of blade for movement with the platform into both concave and convex curvatures. This blade-securing member preferably comprises a flexible elongated C-clamp that follows the curvature of the blade-support platform. The clamp has two clamping arm members, one contacting the blade and the other contacting the underside of the blade support platform, the two clamping arm members being connected and biased toward one another by an intermediate portion that extends along the unsharpened rear blade edge. This elongated clamp is sized to fit between the supporting arms of the blade support platform, and is connected at its ends to the body of the razor by two flexible arms that are free to move toward or away from one another, as required.

A particularly flexible and durable C-clamp has each clamping arm member formed of a plurality of spaced-apart ridges having opposed parallel sides, adjacent ridges being connected at their bases by a relatively thin flexible strip, the spacing between adjacent ridge surfaces determining the maximum concave and convex curvatures which the clamp can assume. Where the blade support is provided with blade guiding flanges, as described above, these flanges may also be used to position the top portion of the C-clamp with respect to the blade support platform.

A preferred form of adjusting structure for changing the curvature of the exposed blade edge comprises a rotatable control knob including a bore having a helical thread; and an adjusting rod secured at one end to the underside and centrally of the blade support platform and including, near its opposite end, at least one projecting portion frictionally engaged with the thread, the frictional force between projecting portion and thread being sufficient to lock the adjusting rod in a perpendicular position during shaving operations, but being able to manually overcome by rotating the control knob. Movement of the rod is perpendicular to the blade support platform and may be limited by providing unthreaded portions in the control knob toward the top and bottom of the knob. The rod is inserted in a deformable control knob, with axial guides, if desired, for receiving the projecting rod portions, the control knob deforming to permit the rod projections to be inserted through the upper unthreaded portion of the knob until the projections are seated into the threads of the knob. The knob may be rotated by means of a disc-shaped dial portion exposed through the handle of the razor and additionally or alternatively through the web portion of the blade securing structure or cap, slots being provided to expose a portion of the periphery of the dial while also securing the dial, and hence the entire knob, against movement perpendicular to the blade support platform.

The adjustable razor according to the present invention is most conveniently provided in the form of a strip-type razor in which razor blade material is fed from a supply chamber along the adjustable blade supporting platform, providing an exposed razor blade edge of the desired convex or concave configuration, back around underneath the blade support to a takeup arbor. The C-clamp is formed in such a way as to allow longitudinal movement of the blade along the blade supporting surface, in response to blade advancing and tracking means located below the adjusting structure within the interior of the handle.

Because the parts of this razor may all be made inexpensively of molded plastic, and the blade tracking and advancing mechanism is relatively simple and economical to produce, the entire razor may be provided in a disposable form. Thus, fatigue on the plastic parts, especially on the control rod and mating threaded housing, will not be a significant factor, since these units need only be designed to survive as long as the total blade supply included in the razor assembly.

Other objects, features, and advantages will appear to one skilled in the art from the following description of a preferred embodiment of the invention, taken together with the attached drawings thereof in which:

FIG. 1 is an end elevational view of a strip-type razor construction embodying the present invention.

FIG. 2 is an exploded perspective view of the embodiment 3–FIG. 1;

FIG. 3 is a sectional view along the line 3—3 of FIG. 1;

FIG. 4 is a partial view of the razor of FIG. 1, showing only the head portion, adjusted to one extreme position; and

FIG. 5 is a partially sectional view of a portion of a control knob for adjusting the curvature of the blade edge.

In the FIGS., there is shown a razor **10** of the type exposing successive portions of a ribbon of blade **11** having a sharpened edge **12** and an opposite edge **13**, including a blade feed assembly **14**, a blade counter **15**, blade supporting structure **16** and cooperating control knob **18**, a cap **20**, and a handle **22**.

Referring to FIG. 2, blade supporting structure **16** includes a blade support platform **23** having flexible end portions **24**, **25** and upstanding blade guide lugs **26**, **27**, flexible supporting arms **29**, **30**, and a rectangular table **31** defined by upstanding walls **33**, **34**. A plurality of teeth **37** project from a thin strip **38** perpendicular to and integrally connected to one elongated edge of the underside **39** of blade support platform **23**. The construction of blade support platform **23** may be varied along the shaving length to compensate for the greater bending of the center of the platform; for example, the thickness at the center may be greater than at the ends, and gradually varying in between to equalize bending stresses.

Depending from blade support **16** is a web **40** including recesses **41**, which mate with dowel pins (not shown) in handle **22** for proper alignment of the razor elements, blade supply chamber **42** for holding blade coil **44** and including a blade feed slot **45** for feeding the blade ribbon therefrom, and slotted opening **47** for receiving blade advance handle **50**, which is connected to blade takeup arbor **51**, one full rotation of handle **50** resulting in a complete change of exposed blade edge on blade support platform **23**. A blade counter disc **15** of the type disclosed in U.S. Pat. No. 3,262,198 is used to monitor the blade feed, disc **15** being coupled to handle **50** through eccentric lug **52**, such that one full 360° rotation of handle **50** advances disc **15** one number. Other blade supply, advancing, and tracking mechanisms may be substituted for the above described mechanism. For example, a ratchet-type blade advancement system may be employed, and numbers provided e.g., on the blade strip itself, eliminating the need for counter **15**.

Secured intermediate of and to the underside **39** of blade support platform **23** is adjusting rod **53**, which is received in cylindrical bore **54** of control knob **18**. Referring to FIG. 5, control knob **18**, formed of a deformable plastic material, includes an interior helical thread **55** formed in bore **54**. Thread **55** is sized and curved to accommodate and frictionally secure therein the helical projections **58** on adjusting rod **53**, these projections being frictionally secured in thread **55** either by forming the projections with a slightly different curvature or with a slightly greater diameter than the respective curvature or diameter of thread **55**, or some combination of both means. This frictional engagement is made such as to prevent slippage of the rod **53** with respect to knob **18** during normal shaving, and yet to allow manual rotation of knob **18** to adjust the position of adjusting rod **53**. Axially extending peripheral notches **63** are also provided in bore **54** to facilitate assemblage of the rod and knob by providing guide channels for insertion of projections **58** through the unthreaded portion **56** of bore **54**, knob **18** being temporarily deformed to accommodate this insertion.

The exterior surface of knob **18** includes a frustoconical portion **65**, through the apex of which extends adjusting rod **53**, and in integral dial **67**, which conveniently has a serrated outer edge **68** for rotating the dial, and hence the knob, for adjustment of rod **53**.

Referring now to FIGS. 2 and 3, cap **20** includes a web portion **70**, the lower edge **71** of which mates with step **74** in web **40** of blade support structure **16**. Web portion **70** also includes a slot **75** through which extends a portion of the periphery of dial **67**, slot **75** preventing axial movement of control knob **18** such that all rotational movement of dial **67** is translated into axial movement of adjusting rod **53**. Shelf **76**, which defines semicircular recess **77**, further limits axial movement of control knob **18**. Web **70** terminates in flexible opposed linking arms **78**, **79** between which is mounted a flexible blade guard or clamp **80**, in the form of a C-clamp, having a top arm portion **81** and a bottom arm portion **82** with opposed parallel surfaces **83**, **84**, respectively, for clamping a shaving length of blade **11** to blade support platform **23**, while allowing a successive shaving length of blade to pass longitudinally along support platform **23** with rotation of blade advance handle **50**.

Each of clamping portions **81**, **82**, which are connected to one another along substantially their entire length by connecting portion **87**, includes a series of teeth or ridges **88**, **89**, having parallel opposed surfaces **90**, connected at their bases **91** to adjacent ridges by thin flexible strips **92**. The spacing between adjacent ridges **88**, **89** determines the maximum concave and convex curvatures which can be assumed by the blade clamp **80**, and hence by the sharpened edge of the shaving length of blade **11**.

For accommodating adjusting rod **53**, which is secured to blade support platform **23**, one ridge **89** is omitted at the center of arm **82**. Because of the resultant flexibility of blade guard **80** due to ridges **89** and connecting strips **92**, blade clamp **80** is able to flexibly deform in unison with blade support platform **23** in response to movement of adjusting rod **53** perpendicular to the upper surface of platform **23**. The end ridges **95** include notches **96** that mate with blade guide lugs **26**, **27**, for alignment of blade supporting structure **16** and cap **20**.

Handle **22** includes interior curved surfaces **98** which cooperate with support platform **23** and with the flexible end portions **24**, **25** of blade support **16** to define a path of travel for blade **11** between supply roll **44** and takeup arbor **51**. Shelf **99**, which includes a circular recess **100** that cooperates with recess **77** in shelf **76** of cap **16** to surround the frustoconical portion **65** of knob **18**, further prevents axial movement of the knob. Handle **22** also includes a slot **101**, aligned with slot **75** of cap **20**, through which extends another peripheral portion of dial **67**. A blade counter window **102** exposes the numbered portion of blade counter **15**, and a depending portion **104** is for grasping the razor.

In operation, a shaving length of blade is advanced into shaving position on blade support platform **23** by suitable rotation of blade supply handle **50**. The desired curvature for the exposed edge is adjusted by rotating knob **18**, the projections **58** on adjusting rod **53** following helical thread **55**, while the knob itself is secured, by slots **75** and **101** and shelves **76** and **99**, against any axial movement. Since adjusting rod **53**, being fixed to the underside **39** of blade support platform **23**, cannot rotate, rotation of control knob **18** results in an axial movement of adjusting rod **53** through bore **54**, causing blade support platform **23** to be accordingly raised or lowered at its center, out of a planar configuration into a concave or convex configuration. For example, movement of dial **67** from right to left, in FIG. 1, will cause blade support platform **23**, together with the shaving length of blade **11** and blade clamp **80**, to assume the curvature shown in FIG. 4.

To accommodate the resultant shortened projected length of blade support platform **23** in the plane perpendicular to adjusting rod **53**, flexible end portions **24**, **25** allow flexible arms **29**, **30** to move toward one another. Clamp linking arms **78**, **79** similarly flex toward one another to accommodate changes in the curvature of blade clamp **80**.

The frictional engagement of projections **58** with thread **55** will stabilize this curvature whenever manual rotation is ceased, and the curvature will remain safely the same for normal shaving operations.

Other embodiments will be apparent to those skilled in the art and are within the following claims.

I claim:

1. A safety razor comprising:

a handle portion, and

a flexible blade support platform having a first end and a second end defining a shaving zone therebetween, for supporting a shaving length of blade in said shaving zone with a sharpened edge of the blade projecting beyond one edge of the support platform,

said flexible blade support platform being mounted on said handle portion for flexing between said ends to vary the curvature of said blade support platform and thereby the curvature of said blade along said shaving length.

2. The device of claim 1 including adjusting structure coupled between said blade support platform and said handle portion for changing the curvature of said blade support platform.

3. The device of claim 2 wherein said blade support platform is flexibly mounted at its ends to said handle portion, and said adjusting structure is coupled to said blade support platform at the underside and centrally thereof.

4. The device of claim 1 wherein said handle portion includes blade supporting structure having a web portion and a pair of arms flexibly supporting the ends of said blade support platform on said web portion, said arms being free to flex toward and away from one another as the curvature of said platform is increased and decreased, respectively.

5. The device of claim 4 wherein said blade support platform and said supporting arms comprise an integral thin flexible strip, the ends of said strip being folded partially back under said blade support platform to form said arms, with the interior curved surfaces between the two ends of said blade support platform and said arms having increased curvature as the curvature of said blade support platform between said ends is increased.

6. The device of claim 1 including a blade securing member having a portion contacting the exposed surface of said blade opposite the blade surface lying along said blade supporting platform for securing said shaving length of blade for movement with said blade support platform into both concave and convex curvatures.

7. The device of claim 6 wherein said blade securing member comprises a flexible elongated C-clamp structure that follows the curvature of said platform, said C-clamp structure having two elongated clamping members extending along said shaving zone, one above the blade support platform and adapted to contact the exposed blade surface and the other beneath the blade support platform and in contact therewith, and an intermediate portion adjacent the rear of said blade support platform for connecting said clamping members together and biasing said members toward one another for clamping the blade to said blade support platform.

8. The device of claim 7 wherein each said clamping member comprises a plurality of spaced-apart ridges connected by thin strips of flexible material, said ridges being spaced apart a predetermined distance corresponding to the maximum curvature desired for said clamp.

9. The device of claim 8 wherein said clamp structure is flexibly supported at each end of said shaving zone on flexible arms free to flex toward and away from another in response to changes in the curvature of said clamp structure.

10. The device of claim 7 wherein said blade support platform includes an alignment lug at each end of said shaving zone and said clamp includes a mating notch at each end of said shaving zone for aligning said blade support platform with said clamp.

11. The device of claim 2 wherein said adjusting structure comprises

a rotatable control knob including a bore having a helical thread,

an adjusting rod secured at one end to the underside and centrally of said blade support platform and including, near its opposite end, at least one projecting portion frictionally engaged with said thread, the frictional force between said rod and said knob being of a magnitude sufficient to lock said adjusting rod in position during shaving operations of said razor, and capable of being manually overcome by rotation of said control knob, and

structure for securing said control knob against perpendicular movement relative to said support platform, while permitting perpendicular movement of said rod relative to said control knob to vary the curvature of said platform.

12. The device of claim 11 wherein said projecting portion of said rod is in the form of a helical segment extending around a portion of the periphery of said rod, said helical segment being of a curvature slightly different from that of said thread, for frictional engagement of said projecting portion and said thread.

13. The device of claim 11 wherein said projecting portion forms a segment of a cylinder having a slightly greater diameter than the cylinder defined by the outer periphery of said thread for frictional engagement of said projecting portion and said thread.

14. The device of claim 11 wherein said bore includes an unthreaded portion at least at the top end thereof to limit upward movement of said rod in said bore.

15. The device of claim 14 wherein said bore is of flexible material capable of radial deformation and includes an axially extending peripheral notch through the said unthreaded portion of a diameter intermediate of the diameter of said unthreaded portion and the diameter of said thread for insertion of said rod projections, with radial deformation of said unthreaded portion, axially along the said unthreaded portion of said bore into said thread.

16. In a safety razor including a ribbonlike length of blade of uniform width having a longitudinally extending rear edge and a parallel sharpened edge, blade supply means, and a blade takeup means wherein successive portions of said blade may be rendered available for shaving,

path-defining structure for a path of travel for said blade between said supply means and said takeup means including an adjustable, flexible blade support platform defining a shaving zone for a said successive portion of said blade,

said blade support platform being flexibly supported on the remainder of said path-defining structure at each end of said shaving length of blade,

adjusting structure, connected to said blade support platform, for varying the curvature of said platform between said flexibly secured ends, and

a cap portion comprising a flexible blade clamp for clamping said blade to said support platform along said shaving length, said clamp flexing with adjustment of the curvature of said blade supporting platform permitting the interior surface of said clamp to assume substantially the curvature of said platform.

17. The device of claim 16 wherein said adjusting structure comprises a rotatable control knob having a portion defining a threaded interior bore and a control rod rotatably and frictionally secured at one end in said threaded bore and having its other end connected to the center of the underside of said blade support platform, said control knob including a disc-shaped exterior surface portion forming a dial for manual rotation of said knob, and said razor includes means cooperating with said knob for preventing relative movement of said knob perpendicular to said blade support platform.

18. The device of claim 17 wherein said cap portion includes a depending web portion and a pair of flexible supporting arms connecting the two ends of said flexible blade clamp, respectively, to said web portion, and said web portion includes an elongated slot for receiving therethrough a peripheral portion of the control knob dial to expose said peripheral dial portion for manual rotation, said slot sized to secure said control knob against axial movement, whereby rotation of said knob actuates axial movement of said control rod perpendicular to said blade support platform for determining the curvature of said platform.

19. The device of claim 18 wherein said razor includes a handle having a web portion containing an elongated slot for receiving therethrough an opposite peripheral portion of said control knob dial to expose said peripheral dial portion for manual rotation,

said control knob includes a frustoconical exterior surface portion having its base adjacent said disc and said control rod extends through its apex to said blade support platform, and

said web portions of said cap portion and said handle include inwardly extending flanges adjacent said elongated

slots having mating notches of circular cross section forming an interior opening of circular cross section sized to contact said frustoconical exterior surface around its periphery further to prevent axial movement of said control knob with rotation of said dial.

20. The device of claim **16** wherein said path-defining structure includes a web portion located beneath and toward the center of said blade support platform, said blade support platform being formed of a thin flexible strip extending, at each end of said platform, through a smoothly curved corner portion and inwardly to said web, said blade supply means and said blade takeup means being both located centrally of said web, and said curved corner portions forming path-defining means for guiding said blade between said blade support platform and said supply means and takeup means, respectively, said curved corner portions being free to move toward and away from one another in response to changes in the curvature of said blade support platform.