United States Patent

[11] 3,583,402

[72] Inventors Donald R. Cordell;
Joan H. Cordell, 11 Auburn Ave., both of Somerville, Mass. 02154

[21] Appl. No. 767,999
[22] Filed Oct. 16, 1968
[45] Patented June 8, 1971

[54] **PORTABLE INFANT URINAL**
4 Claims, 7 Drawing Figs.

[52] U.S. Cl. 128/295
[51] Int. Cl. A61f 5/44
[50] Field of Search 128/284, 286, 287, 290, 295

[56] **References Cited**

UNITED STATES PATENTS

1,329,195	1/1920	Martinka	128/286
2,277,043	3/1942	Cohn	128/286X
2,711,736	6/1955	Petitpas	128/286
3,182,661	5/1965	Ribeiro et al.	128/286
3,192,926	7/1965	Callaghan	128/286
3,258,011	6/1966	Goodman	128/260x
3,424,160	1/1969	Koornwinder et al.	128/286
3,441,023	4/1969	Rijssenbeek	128/287
3,441,024	4/1969	Ralph	128/287

Primary Examiner—Charles F. Rosenbaum
Attorney—Diller, Brown, Ramik & Holt

ABSTRACT: This disclosure relates to a portable urinal for infants, both male and female, and includes a relatively hollow body defining a chamber in which is housed liquid-absorbing material, the body being of a generally triangularly shaped outline for male infants and of a generally shallow U-shaped outline for female infants, the male infant urinal including a rear wall having a relatively small opening for receiving an infant's penis while the female urinal includes a relatively elongated opening, and in each case the urinal is constructed from relatively chemically inert pliable synthetic polymeric material.

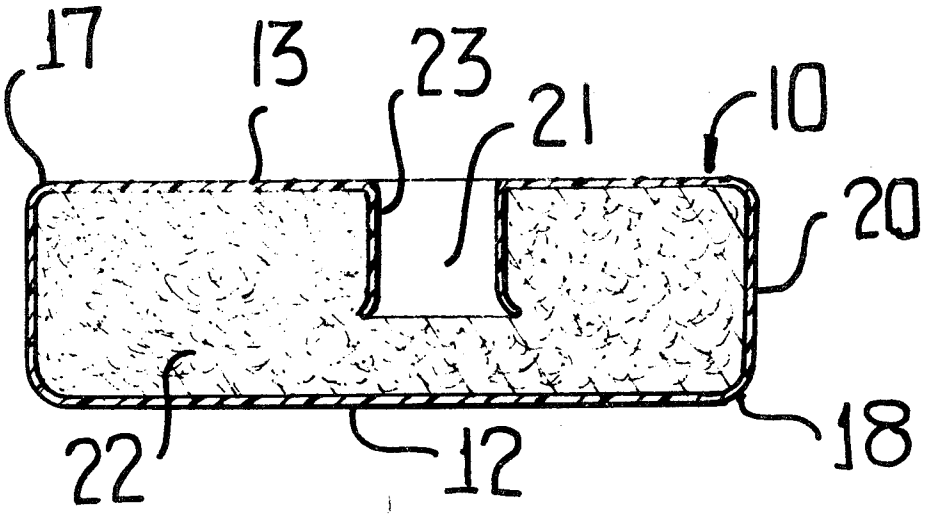

FIG.1

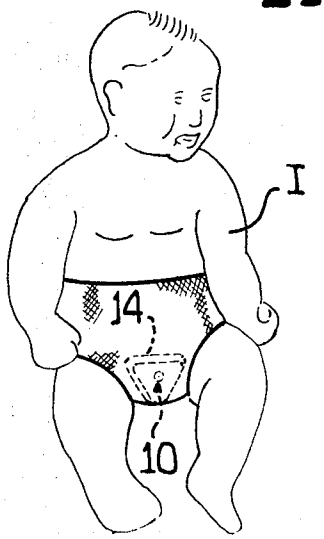

FIG.2

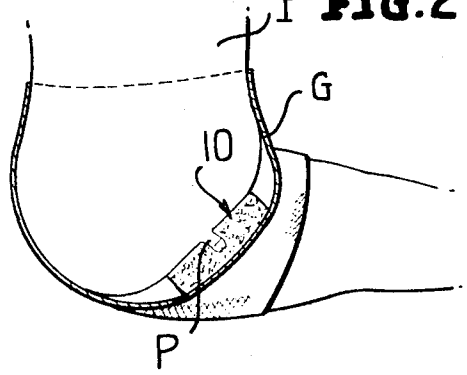

FIG.3

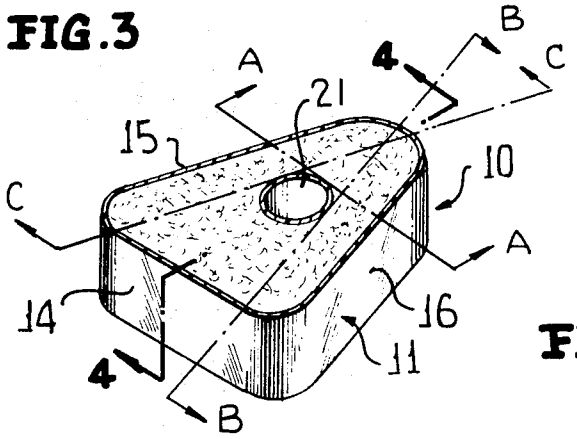

FIG.4

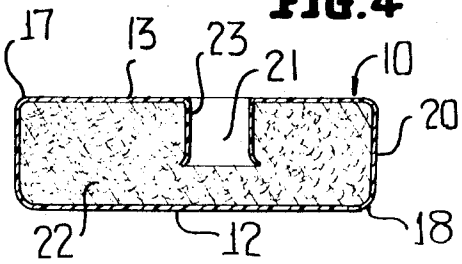

FIG.5

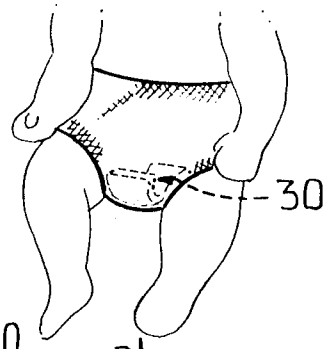

FIG.6

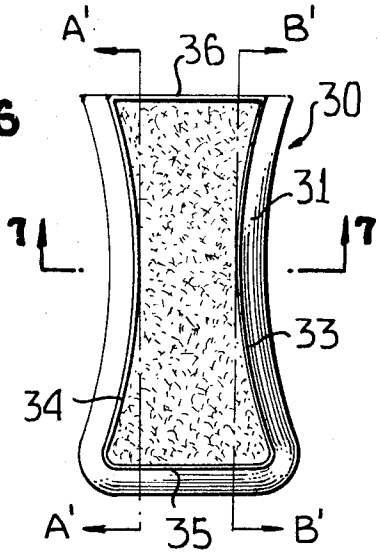

FIG.7

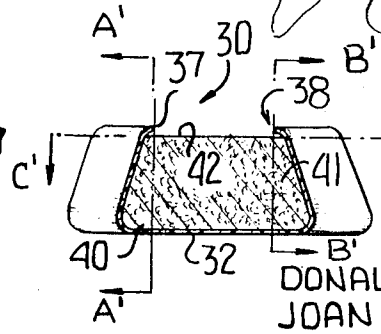

INVENTORS
DONALD R. CORDELL &
JOAN H. CORDELL

BY Mason, Porter, Deller & Brown
ATTORNEYS

PORTABLE INFANT URINAL

A primary object of this invention is to provide a novel urinal of a portable and disposable nature particularly adapted for infant use as a substitute for conventional diapers, the urinal including a relatively hollow body defining a chamber, the body including a pair of relatively spaced triangularly shaped front and rear walls, a top wall and a pair of sidewalls converging in a direction away from the top wall to impart a generally triangularly shaped outline to the body as viewed in front elevation, a relatively small penis-receiving opening in the rear wall, and liquid-absorbing material in the chamber for absorbing and retaining urine.

A further object of this invention is to provide a novel portable infant urinal of the tube heretofore described including recess means in the liquid-absorbing material adjacent the opening.

Still another object of this invention is to provide a novel portable urinal for a female infant including a relatively hollow body defining a chamber, the body being defined by a pair of sidewalls and at least one end wall, the body being of a generally shallow U-shaped configuration as viewed in side elevation, the sidewalls having oppositely opening concave wall portions adapted to comfortably dispose the body between the legs of a female infant, and liquid-absorbing material in the chamber.

A further object of this invention is to provide a novel portable female urinal of the tube immediately set forth wherein the body is constructed from relatively chemically insert pliable synthetic polymeric material, and the body terminates in a top edge defining an opening of the chamber through which urine may pass for absorption by the liquid-absorbing material, and the opening being of a generally U-shaped configuration with the legs thereof being defined by the body sidewalls.

With the above and other objects in view that will hereinafter appear, the nature of the invention will be more clearly understood by reference to the following detailed description, the appended claimed subject matter, and the several views illustrated in the accompanying drawing.

In the drawing:

FIG. 1 is a schematic front perspective view of a male infant, and illustrates in phantom outline a novel portable urinal of this invention disposed in its operative position and maintained thereat by a pair of pants, a diaper or similar underclothing.

FIG. 2 is a sectional view taken through the urinal, and more clearly illustrates the operative position thereof relative to the genital area of the infant.

FIG. 3 is an enlarged top perspective view of the infant urinal with a rear wall thereof removed for clarity, and illustrates the generally triangular configuration of the urinal and liquid-absorbing material housed in a chamber thereof.

FIG. 4 is a sectional view taken generally along line 4–4 of FIG. 3, and illustrates a tubular portion of the urinal rear wall projecting into the liquid-absorbing material.

FIG. 5 is a perspective view similar to FIG. 1, and illustrates a portable urinal for a female infant disposed in its position of use.

FIG. 6 is a top plan view of the female urinal of FIG. 5, and illustrates liquid-absorbing material in a chamber of the urinal having a relatively elongated opening and concavely contoured sidewalls for facilitating the comfortable positioning of the urinal between the legs of a female infant.

FIG. 7 is a sectional view taken generally along line 7–7 of FIG. 6, and more clearly illustrates the details of the female urinal.

Reference is first made to FIGS. 1 through 4 of the drawing which illustrate a novel disposable portable cartridge-type male urinal which is generally designated by the reference numeral 10. The urinal 10 includes a relatively hollow body 11 which is preferably constructed from chemically inert pliable synthetic polymeric material, such a polyethylene or similar plastic material. The body 11 includes a front wall 12 (FIG. 4), a rear wall 13, a top wall 14, and a pair of sidewalls 15, 16. The front and rear walls 12, 13, respectively, merge smoothly with the walls 14 through 16 at rounded generally triangularly shaped edges 17, 18 which impart an overall triangular shape to 4) urinal 10 as viewed in both front and rear elevations, as is best illustrated in FIGS. 1 and 3 of the drawing. The urinal body 11 is thereby provided with a like-shaped chamber which is generally designated by the reference numeral 20.

A tubular portion 21 FIGS. 3 and 4) of the rear wall 13 is directed into the chamber 20 and defines an opening for receiving the penis of a male infant.

Liquid-absorbing material 22, such as cotton, is housed in the chamber 20 and includes a recess 23 into which is received the tubular wall portion 21. The tubular wall portion 21 thereby functions to maintain the penis out of contact with the liquid-absorbing material 22, although in further keeping with this invention, the tubular wall portion 21 may be omitted while the recess 23 would be retained to likewise function to prevent the infant's penis from contacting subsequently the urine-saturated portions of the absorbent material 22.

In operation the urinal 10 is supplied to an infant in the manner clearly illustrated in FIG. 2 with the penis P thereof projecting into the tubular wall portion 21, or in the absence of the latter, into the remaining recess 23 of the liquid-absorbing material 22. It is to be noted that due to the triangular shape of the urinal 10 the same is comfortably disposed in the genital area of the infant I, as is best illustrated in FIGS. 1 and 2 of the drawing. The urinal may, of course, be held in the position illustrated in FIGS. 1 and 2 by a suitable garment G, such as a pair of pants or similar underclothing, or a conventional diaper.

It will be appreciated from the foregoing description and the illustrations of FIGS. 1 and 2 that the rounded corners and the pliable nature of the urinal 10 allow the same to be comfortably positioned as illustrated in FIGS. 1 and 2. Furthermore, both in the absence of the tubular wall portion 21 in which case an opening is merely formed generally centrally of the rear wall 13, or in the presence of the tubular wall portion 21, the recess 23 of the liquid-absorbing material 20 maintains the latter out of contact with the penis and immediate body portions of the genital area, thereby eliminating the discomfort of "diaper" rash or similar skin irritations resulting from prolonged body contact with urine, as in the case of conventional diapers.

It is also well recognized that very young infants are relatively immobile yet due to their liquid diets their frequency of urination is much more pronounced immediately after birth than at a time several months thereafter. During this early stage an infant will lie prone on his back, abdomen or either side with relatively little movement. The construction of the urinal 10 takes these facts into consideration, and in this regard reference is made to FIG. 3 in particular. Assuming that the urinal 10 is positioned with the top wall disposed uppermost, as illustrated in FIGS. 1 and 2, the volume beneath the plane A–A defined by portions of the walls 12, 13, 15 and 16 defines a "urine trap" which can collect an appreciable amount of urine, even beyond that absorbed by the liquid-absorbing material 22 disposed in this volume. Thus, when the infant is lying on his back, his abdomen or is being held in an upright or sitting position a generally triangularly shaped volume is provided for the immediate receipt and absorption of urine.

Should the infant by lying on one side or the other a generally rectangular volume is similarly provided between the planes B–B and C–C and the adjacent walls 16, 15, respectively. Thus, in every natural position of the infant a relatively large volume is provided for directly receiving, absorbing and retaining urine, and even when the infant attains appreciable mobility the substantially entirely enclosed triangular urinal 10 constitutes an effective urine trap irrespective of the infant's position.

Reference is now made to FIGS. 5 through 7 of the drawing which illustrate another disposable urinal, generally designated by the reference numeral 30. The urinal 30 is particularly adapted for use upon female infants and includes a

body 31 which is preferably constructed from a single piece of relatively chemically inert pliable synthetic polymeric material.

The body 31 includes a bottom wall 32 (FIG. 7), a pair of sidewalls 33, 34, a front wall 35 and a rear wall 36. The sidewalls 33, 34 are generally of a shallow U-shaped configuration as viewed in side elevation, as is best illustrated in FIG. 5 of the drawing. This U-shaped or question mark configuration of the urinal 30 permits the same to be comfortably positioned and accommodated at the genital area of the female infant, as is clearly illustrated in FIG. 5. Furthermore, the sidewalls 33, 34 are of an oppositely opening concave configuration tapering outwardly from a longitudinal centerline of the body 31 to accommodate in a comfortable manner the legs of the female infant.

An upper portion of the body 31 includes a terminal edge 37 defining an opening 38 of a chamber 40 in which is housed liquid-absorbing material 41, such as cotton. An upper surface 42 of the material 41 adjacent the edge 37 is preferably recessed, as shown in FIG. 7, to prevent direct contact between the liquid-absorbing material 41 and the infant to prevent rashes or similar discomforts which might otherwise occur.

The advantages heretofore outlined relative to the male urinal 10 are equally applicable to the female urinal 30. It should be particularly noted in this regard that the particular shape of the chamber 40 likewise provides an urine trap for any position which might be assumed by the female infant. With respect to FIGS. 6 and 7, the plane A'-A' and the adjacent sidewall 34 set off a volume of appreciable size if, for example, the infant is lying on her right side while the plane B'-B' and the adjacent sidewall 33 likewise define another volume if the infant is lying on her left side. Since for the most part the infant will be in a position on her back the major volume for direct urine absorption is the largest and is defined between the plane C'-C', the bottom wall 32, and portions of the end and sidewalls.

While preferred forms and arrangements of parts have been shown in illustrating the invention, it is to be clearly understood that various changes in details and arrangement of parts may be made without departing from the spirit and scope of this disclosure.

We claim:

1. A disposable portable urinal adapted for infant use comprising a relatively hollow body of liquid-impermeable material defining a chamber which includes a rear wall adapted to be disposed adjacent the genital area of an infant and a front wall remote and in spaced relationship to said rear wall, means defining an opening in said rear wall, said opening defining means being an integral tubular portion of said rear wall projecting toward but terminating short of said front wall, liquid-absorbing material in said chamber but not in said tubular portion for preventing contact between the genital area and the liquid-absorbing material, and wall means of said body being so relatively disposed as to define urine traps in any normal position of an infant.

2. The urinal as defined in claim 1 wherein said body is constructed from relatively chemically inert pliable synthetic polymeric material.

3. The urinal as defined in claim 1 wherein said rear wall is of a generally triangularly shaped configuration, and said opening is disposed generally centrally thereof.

4. The urinal as defined in claim 1 wherein said urinal consists solely of said body including the tubular portion thereof and said liquid-absorbing material, and said body is formed as a single walled integral homogeneous polymeric material member.