United States Patent

[11] **3,580,464**

[72] Inventor **Edwin D. Griffith**
Pemberville, Ohio

[21] Appl. No. **807,601**
[22] Filed **Mar. 17, 1969**
[45] Patented **May 25, 1971**
[73] Assignee **Owens-Illinois, Inc.**

[54] **HERMETICALLY SEALED COMPOSITE CONTAINER**
4 Claims, 4 Drawing Figs.

[52] **U.S. Cl.** **229/5.6,** 229/48, 229/5.5, 220/67
[51] **Int. Cl.** **B65d 3/10,** B65d 5/02
[50] **Field of Search** 229/5.6, 4.5, 5.5, 48; 220/66, 67, 63, 1; 93/39.1

[56] **References Cited**

UNITED STATES PATENTS

2,413,449	12/1946	Hatch	229/48TUX
3,381,594	5/1968	Ellerbrock et al.	229/4.5X
3,406,891	10/1968	Buchner et al.	229/5.5X
3,491,936	1/1970	Fox	229/5.6
3,403,813	10/1968	Price	220/67X

Primary Examiner—David M. Bockenek
Attorneys—A. J. Steger and E. J. Holler

ABSTRACT: An improved hermetically sealed composite container formed by double seaming a pair of heated and compounded metal ends to a flanged can body so that the heated compound is bonded to an inner liner of thermoplastic material on the can body to provide an effective seal.

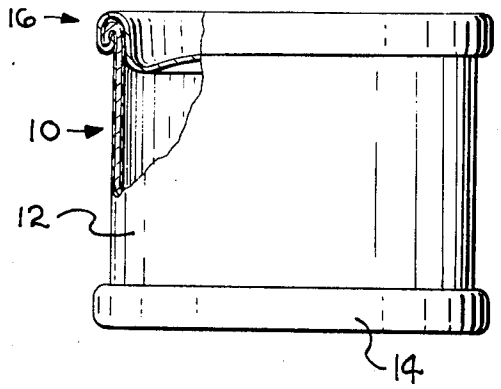

FIG. 1

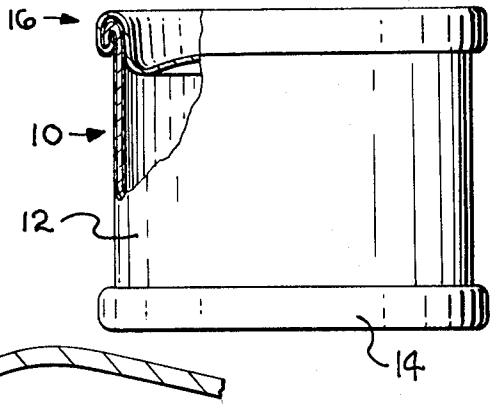

FIG. 2

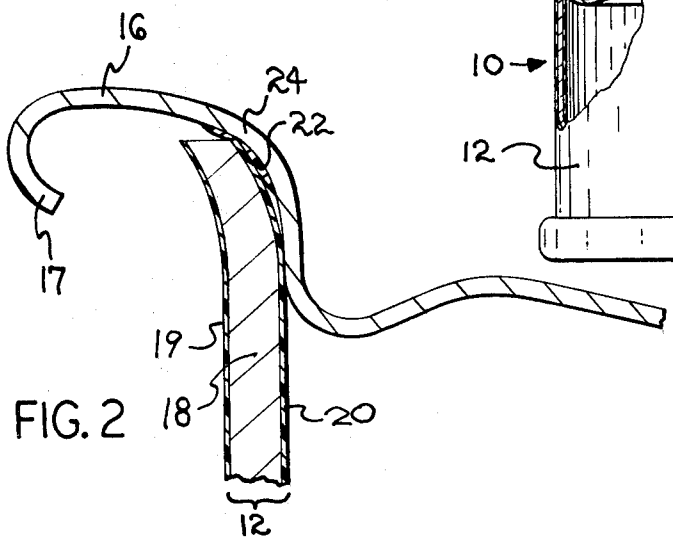

FIG. 3

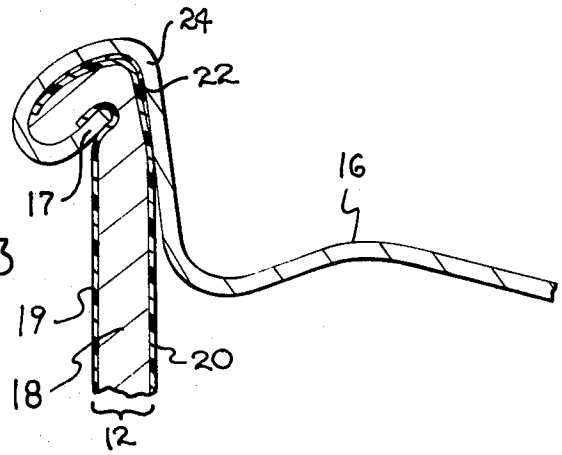

FIG. 4

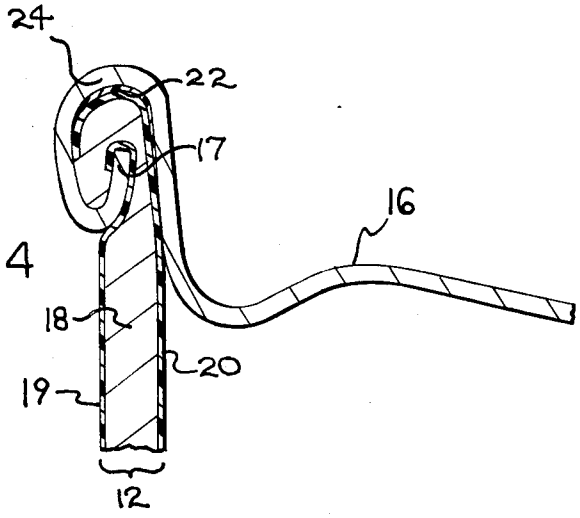

INVENTOR.
EDWIN D. GRIFFITH
BY A. J. Steger
E. J. Holler
ATTORNEYS

HERMETICALLY SEALED COMPOSITE CONTAINER

BACKGROUND OF THE INVENTION

This invention relates to containers and, more particularly, relates to a container constructed of relatively low strength material which is well suited for packaging products requiring a hermetic seal, such as pressure-producing products.

It is very desirable to have an inexpensive container suitable for packaging pressure-producing products such as carbonated beverages and beer. Suitable containers for such high-pressure products have been rather expensive due to the high strength characteristics necessary to contain such products.

In recent years, there have been introduced a number of different types of lightweight, composite containers constructed of low strength materials which are considerably less expensive than tin plate and aluminum containers. Such inexpensive containers normally are comprised of a cylindrical fiber body which is closed at both ends by metal caps which are attached to the fiber body by a standard double-seaming method. In this standard double-seaming method, a curved extension of the metal ends is folded over together with a flange portion on the fiber body so as to form a double-seam joint. Such standard fiber containers have experienced difficulty in packaging pressure-producing products as the seamed joint between the metal ends and the fiber body has not exhibited sufficient strength to withstand the high-pressure of the products contained therein. Thus, end seam failure was frequently experienced when attempts were made to use standard double-seamed fiber cans for packaging pressure-producing products. Thus, even though standard fiber containers are of much lighter weight and more inexpensive than the stronger metal containers, they have not been suitable for use in packaging pressure-producing products.

Thus, there is a significant need for, and it is an object of this invention to provide an inexpensive container which is adapted to contain a pressure-producing product without sustaining any structural failure or leakage.

Other objects, features, and advantages of this invention will become obvious to those skilled in the art upon reference to the following detailed description and the drawings illustrating a preferred embodiment thereof.

IN THE DRAWINGS

FIG. 1 is a front elevation view of a lightweight fiber container with parts broken away in section and incorporating the metal end attaching means of this invention.

FIG. 2 is an enlarged sectional view of a compounded container end and the flanged can body to which it is to be joined.

FIG. 3 is a sectional view of the components of FIG. 2 at a later stage in the joining process.

FIG. 4 is a sectional view of the components of FIG. 3 showing them in the final sealed relationship.

SUMMARY OF THE INVENTION

In general, this invention provides a substantially rigid container which may be constructed of fiber, plastic, lightweight metal, or combinations of such materials, and which is adapted to hold a pressure-producing product. This invention provides for the use of compounded metal ends which are heated prior to being double-seamed to the composite can body so that the heated compound flows to seal all of the spaces between the metal ends and the composite can body. In addition, the heated compound is adapted to bond itself to the standard inner liner of thermoplastic material on the composite can body to provide an additional sealing function.

DESCRIPTION OF THE PREFERRED EMBODIMENT

Although the preferred embodiment as shown in FIGS. 1—4 features a fiber-type container, it should be clear that the invention is equally well suited to be used in conjunction with a thin-walled container constructed of lightweight metal, plastic, etc.

More particularly, FIG. 1 shows a cylindrical container **10** formed from a thin-walled fiber can **12** and a pair of metal end closures **14** and **16**.

The construction of the cylindrical fiber can **12** is of a standard fiber can configuration and can best be seen in FIGS. 2—4. The fiber can **12** is comprised of a layer of structural material **18** sandwiched between an outer label **19** and an inner liner **20** which is laminated or bonded to the inside of the structural material layer **18**. It should be understood that a variety of different materials can be utilized to produce the structural material layer **18**, the outer label **19**, and the inner liner **20**. As examples of suitable such materials, the inner liner **20** may be formed of a lamination of 0.001 in. polypropylene film /0.00035 in. aluminum foil /and 25 lb. per ream paper. The structural material layer **18** could be formed from a number of layers of can stock grade natural kraft linerboard. The outer label **19** may be a lamination of 0.0005 in. low density polyethylene and 25 lb. per ream natural kraft paper. The low density polyethylene in this example would serve as an outer protective coating for the natural kraft paper. Likewise, the inner liner **20** formed of polypropylene film and aluminum foil is positioned so as to be in contact with the product being contained within the container **10** and keeps the product out of contact with the structural layer **18**.

The metal end closures **14** and **16** are of a standard type used in connection with hermetically sealed cans and may be identical with each other. For the purpose of illustration, FIGS. 2—4 depict the sequence of uniting the end closure **16** to the fiber can body **12**. It should be understood that the end closure **14** is attached to the fiber can body **12** in an identical procedure.

The main feature of this invention is the provision of a quantity of compounding composition **22** which is strategically positioned at the shoulder portion **24** of the metal end closure **16**, allowed to cure, and heated prior to the attaching of the end closure **16** to the fiber can body **12**. Although any suitable compound may be used, the use of a solvent-based end lining compound which is adapted to bond itself to the thermoplastic surface of the inner liner **20** of the fiber can body **12** when heated has proven very successful. Two examples of such solvent-based end lining compounds are Compound No. 1108 and Compound No. 9125, both of which are manufactured by the Dewey and Almy Chemical Division of W.R. Grace & Company.

Standard procedure for the attaching of the metal end closure **16** to the fiber can body **12** would involve the use of a double-seaming method whereby an outer flange portion **17** of the end closure is rolled under a flanged end of the composite can body and both components are then pressed firmly together to form a double-seamed joint.

Compounding materials have been incorporated into the standard double-seaming method to provide increased sealing of the end joint construction. However, such standard joints do not incorporate a bonding effect to provide a stronger and more uniform sealing capability in addition to the sealing achieved by the mechanical joint.

In contrast to this standard method of joining the metal end closure to the fiber can body, the subject invention provides a method which accomplishes both a mechanical joint and an internal seal achieved through bonding. As described previously, a solvent-based compound **22** is applied to the shoulder portion **24** of the metal end closure **16** prior to the joining of the metal end closure **16** to the fiber can body **12**. The compounded metal end closures are then allowed to cure before use. This curing procedure allows for the setting of the compound and increases its bonding and strength capabilities. The compounded metal end closures are then heated to a temperature in the range of 175—250° F. before being attached to the fiber can body. This heating of the compound softens it and allows it to flow with increased capability between the metal end closure and the fiber can body as those two components are seamed together. In addition, the heating of the compounded metal end closure facilitates the bonding of the compound with the thermoplastic surface of the inner liner **20**. Once the

compounded metal end closures are heated, the metal end closure **16** and the fiber can body **12** are seamed together by means of a standard double-seaming method as illustrated in the sequence of FIGS. **2**—**4**. It can be seen in the transition from FIG. **2** to FIG. **3** that the heated compound **22** flows along a great length of the joint between the end closure **16** and the fiber can body **12**. In so doing, the heated compound is spread out much more uniformly than it would be if not heated and will therefore plug any pin holes or cracks which occur in the body flange area which might otherwise cause failure. As the subject joint is completed in the transition from FIG. **3** to FIG. **4**, the heated compound becomes bonded to the thermoplastic surface of the inner liner **20**, thereby providing an internal seal. As a result, a stronger and more uniform seal is obtained between the metal end surface and the fiber can body liner surface because the compound acts as a bonding agent rather than merely as a gasketing material.

Thus, it can be seen that the use of a compound and the heating of this compound prior to the seaming of the metal end closure and the fiber can body results in a joint which is both stronger and more effective from the standpoint of sealing. For example, one experiment conducted with a sustained pressure of 75 p.s.i. using identical fiber can bodies, compounded metal ends, and seaming conditions resulted in 100 percent failure of the group with unheated metal ends within two days; whereas the group with heated ends was 95 percent successful.

Hence, it is clear that the procedure of the subject invention results in a lightweight and inexpensive container which exhibits the strength properties, heretofore unknown in such containers, capable of withstanding the high-pressures associated with pressure-producing products, such as carbonated beverages and beer. As a result, the desirable use of inexpensive lightweight containers has been extended to an ever increasing line of products, such as those that have pressure-producing characteristics. An additional advantage of this invention is derived from the fact that containers constructed of fiber or plastic are capable of disposal by means of

burning, which is not the case with standard metal containers.

Although but one preferred embodiment has been shown and described in detail, it should be clear to those skilled in the art to which this invention pertains that many changes and modifications may be made thereto without departing from the scope of the invention.

I claim:

1. A mechanically strong, hermetically sealed composite container adapted to contain a fluid under pressure comprising:

a cylindrical fiber can body constructed of a number of layers of paper and having an inner liner including a thermoplastic material;

and a pair of end closure means which are mechanically double seamed to the ends of said cylindrical body, each of said end closure means including a portion of compound material which forms a bond with said thermoplastic material upon the application of heat to thereby hermetically seal said container.

2. A mechanically strong, hermetically sealed container adapted to contain a fluid under pressure as set forth in claim **1** wherein said inner liner is formed from a lamination of polypropylene film, aluminum foil, and paper.

3. A mechanically strong, hermetically sealed composite container adapted to contain a fluid under pressure comprising:

a cylindrical body formed from plastic and having an inner liner including a thermoplastic material;

and a pair of end closure means which are mechanically double seamed to the ends of said cylindrical body, each of said end closure means including a portion of compound material which forms a bond with said thermoplastic material upon the application of heat to thereby hermetically seal said container.

4. A mechanically strong, hermetically sealed container adapted to contain a fluid under pressure as set forth in claim **3** wherein said inner liner is formed from a lamination of polypropylene film, aluminum foil, and paper.