United States Patent

[11] **3,579,917**

[72] Inventors **Stephen A. Boettcher**
Deerfield (Riverwoods);
Louis F. Simonetti, Morton Grove, Ill.

[21] Appl. No. **776,023**
[22] Filed **Nov. 15, 1968**
[45] Patented **May 25, 1971**
[73] Assignee **Speedfam Corporation**
Des Plaines, Ill.

[54] **POLISHING MACHINE**
7 Claims, 8 Drawing Figs.

[52] **U.S. Cl.** **51/131,** 51/266
[51] **Int. Cl.** **B24b 7/04**
[50] **Field of Search** 51/131, 165.30, 266, 277, 322

[56] **References Cited**

UNITED STATES PATENTS

698,126	4/1902	Miskolczy	51/266
2,998,680	9/1961	Lipkins	51/131
3,110,988	11/1963	Boettcher	51/131

Primary Examiner—Lester M. Swingle
Attorney—Johnson, Dienner, Emrick, Verbeck & Wagner

ABSTRACT: A polishing machine load plate unit to which workpieces are affixed for polishing, and through which a liquid is selectively circulated.

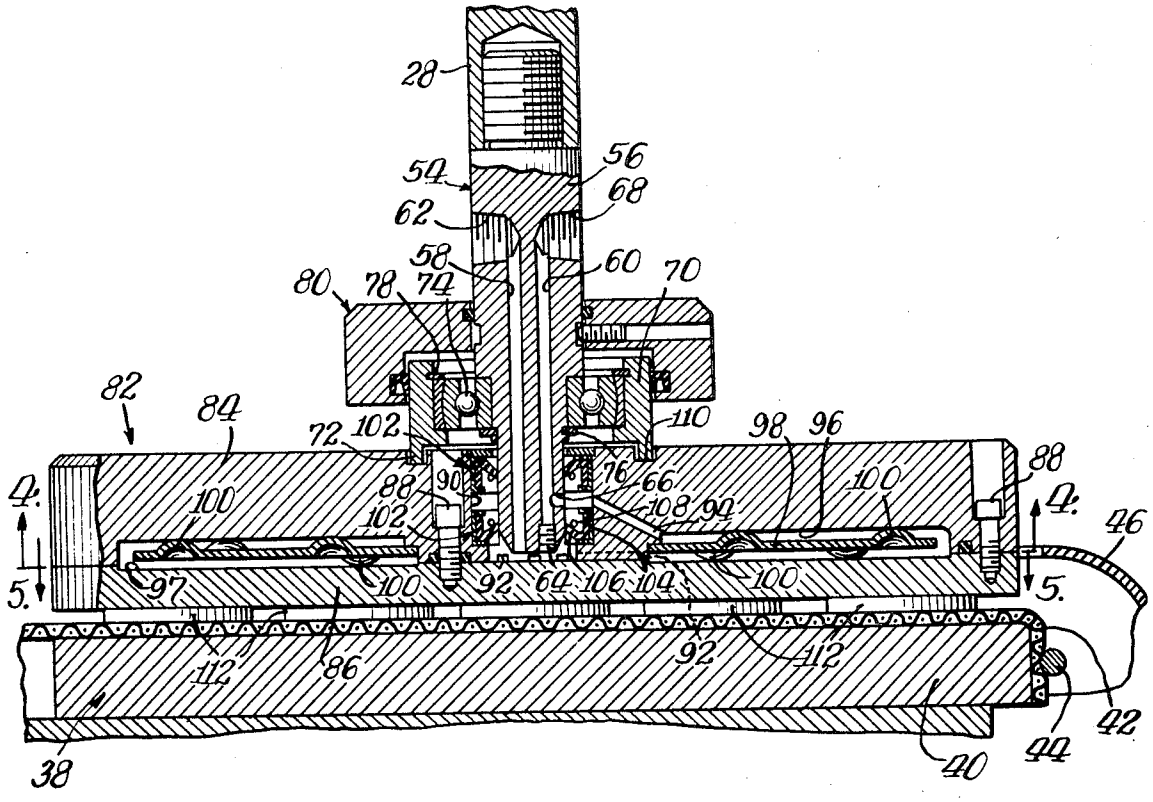

Fig. 1.

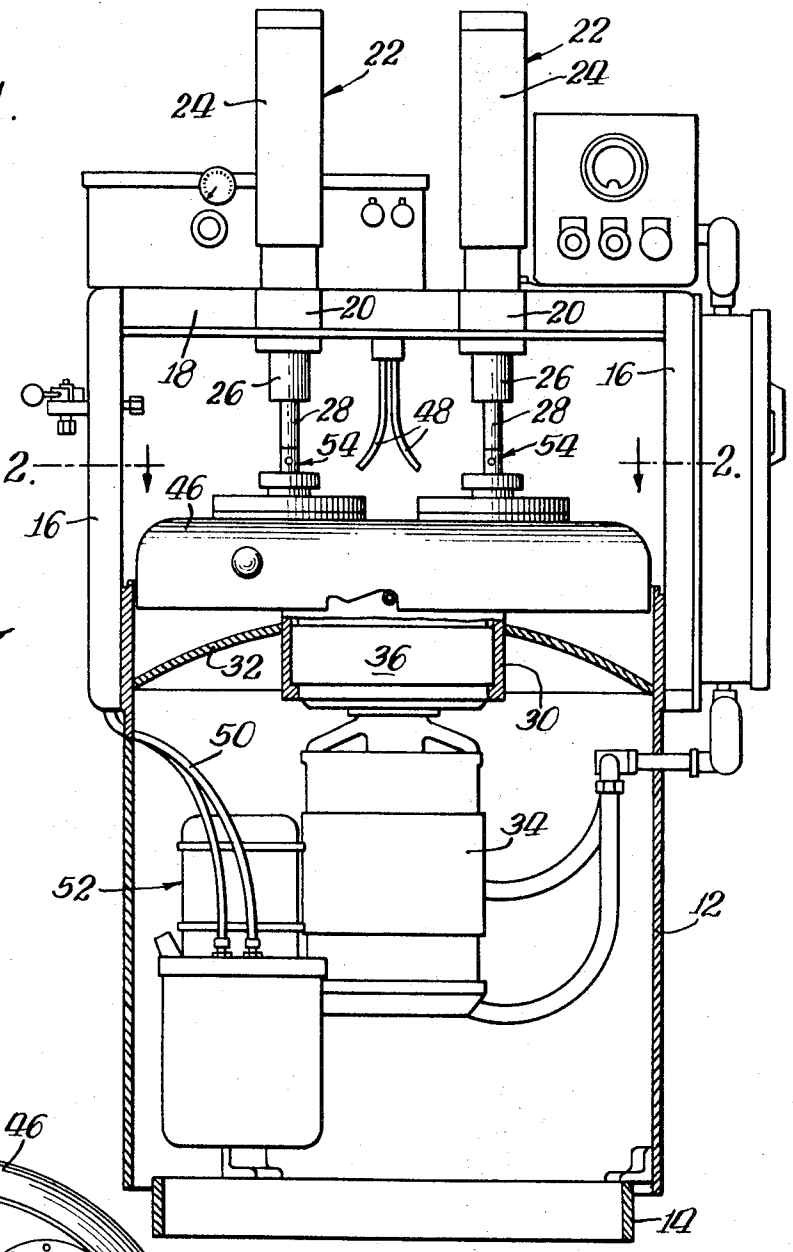

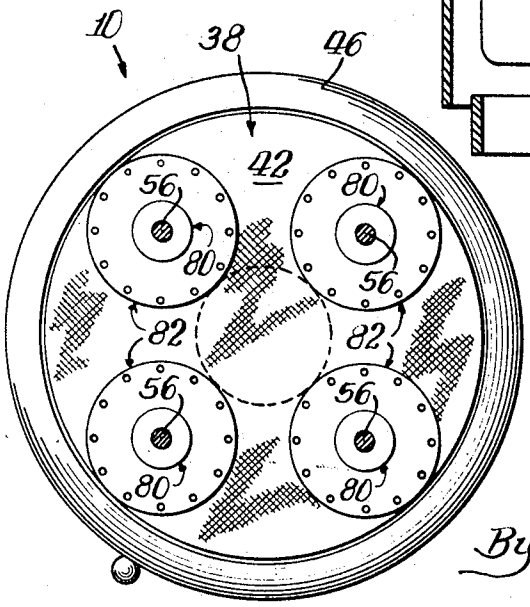

Fig. 2.

Inventors:
Stephen A. Boettcher,
Louis F. Simonetti,
By Brown, Jackson,
Boettcher & Dienner Attys.

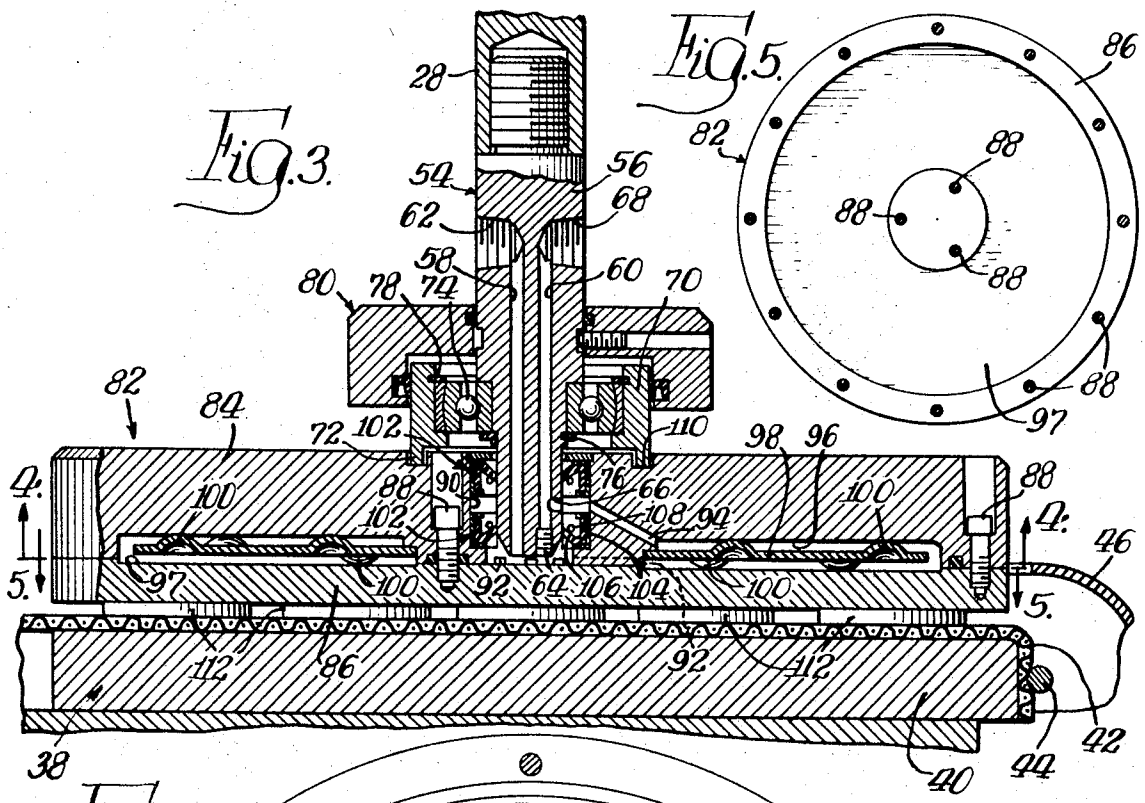
Fig. 3.
28
54
56
62
68
58
60
70
80
78
74
82
84
72
102
110
98
96
88
90
76
66
100
108
94
4.
5.
97
92
64
106
104
46
112
86
38
40
44
42

Fig. 5.
86
82
88
97

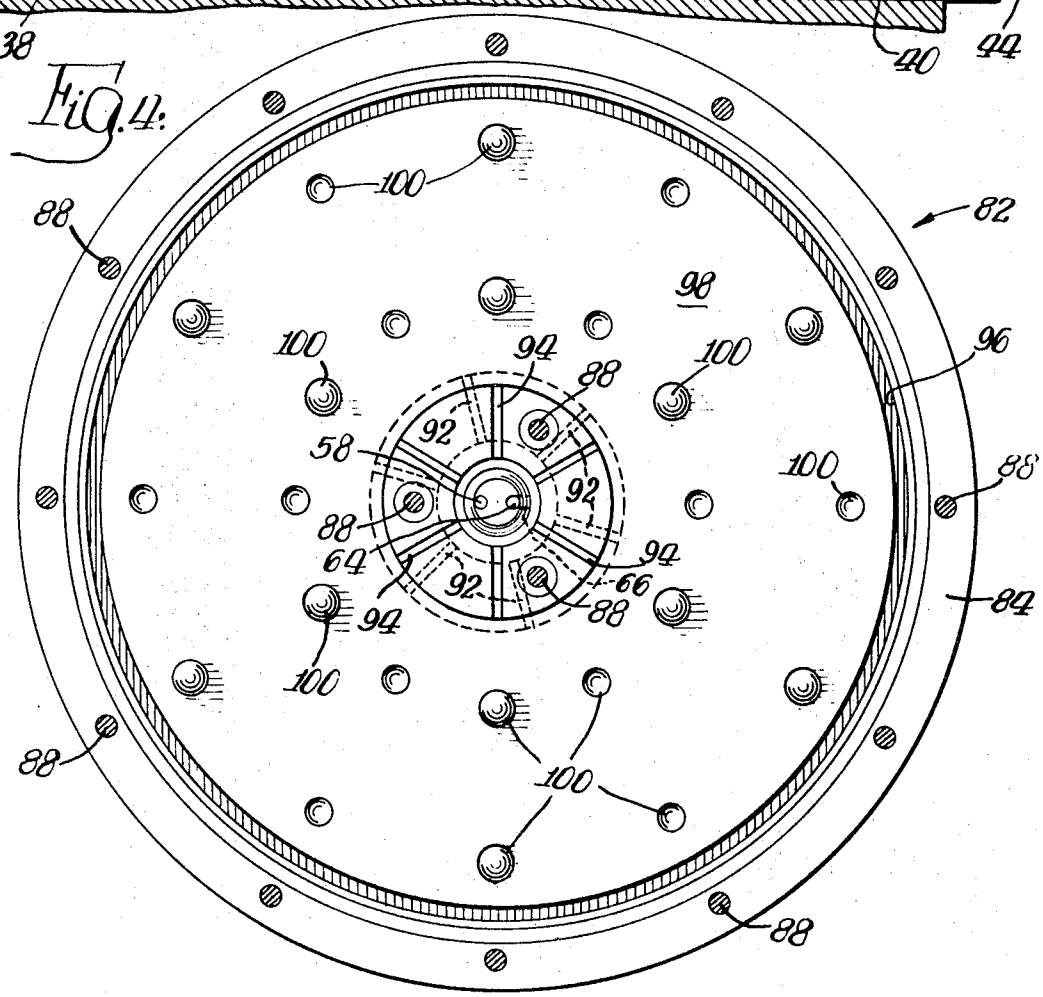
Fig. 4.
100
88
82
98
96
94
92
58
64
66
84

Fig. 6.

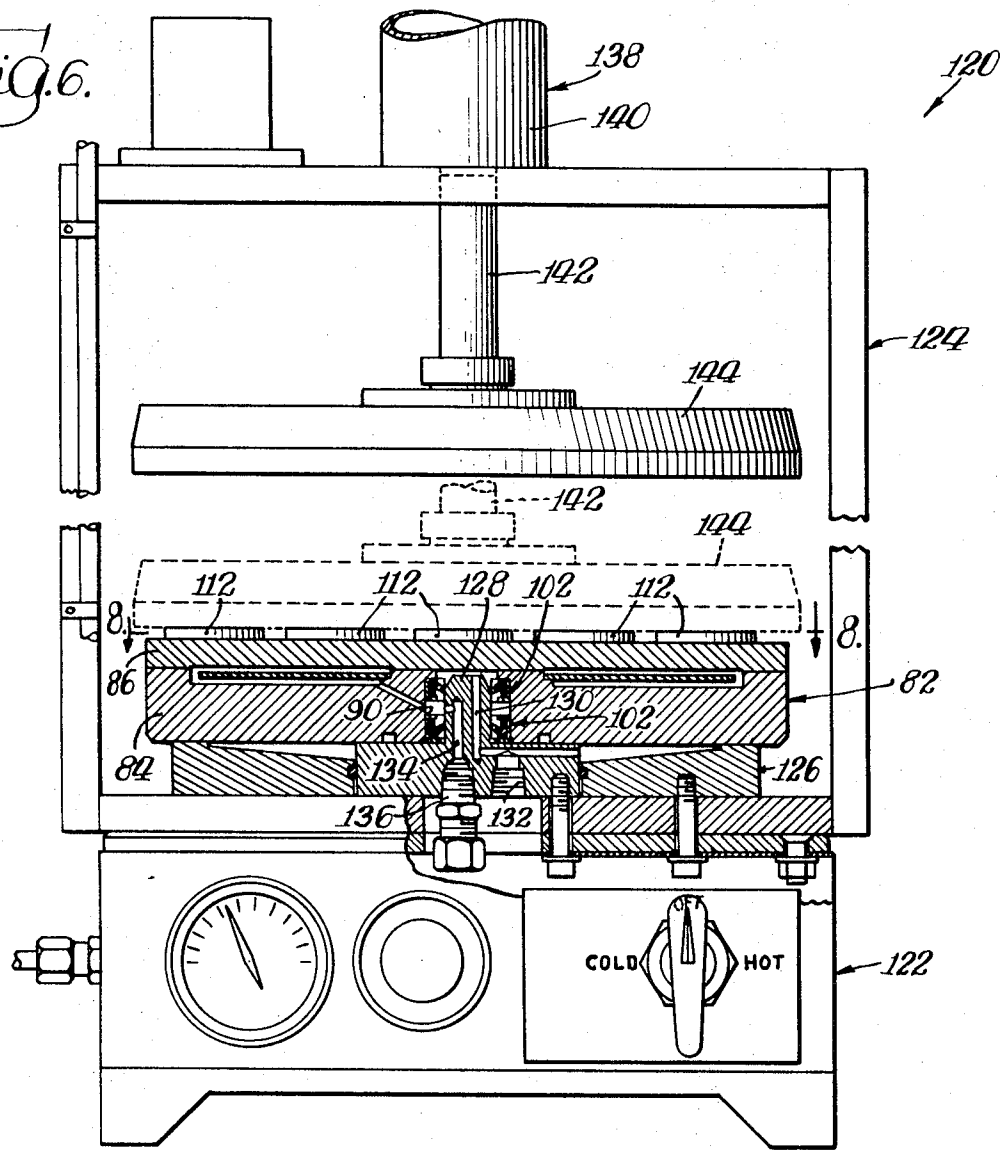

Fig. 7.

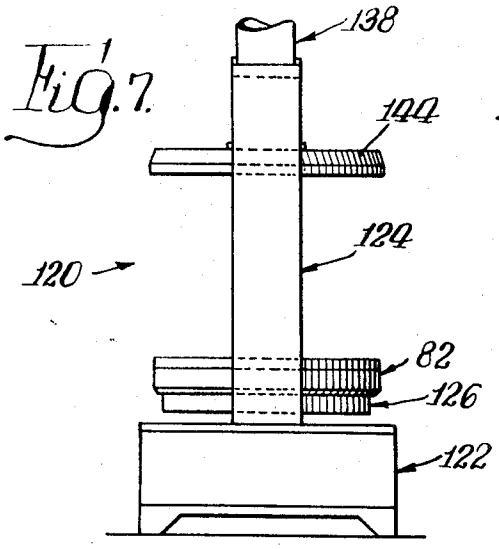

Fig. 8.

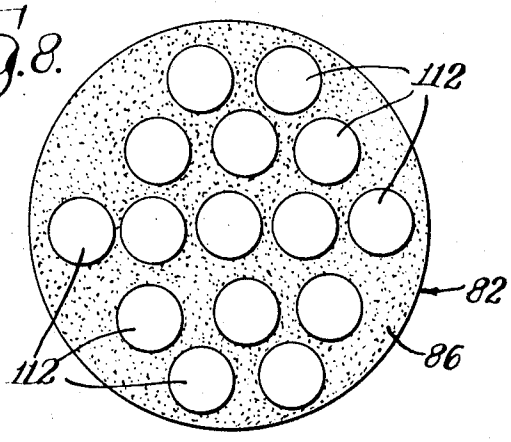

POLISHING MACHINE

BACKGROUND OF THE INVENTION

1. Field of the Invention

The present invention relates generally to a polishing machine comprised of a rotatable polishing wheel assembly, and means for urging workpieces to be polished into engagement with the upper surface of the polishing wheel assembly.

2. Description of the Prior Art

One type of polishing machine comprises a horizontal rotatable backing wheel, a polishing cloth extending across the upper surface of the backing wheel, a load plate unit adapted to receive workpieces at the lower surface thereof and to be positioned over the backing wheel with the workpieces engaging the polishing cloth, and means, including a vertical spindle assembly, for centering and applying pressure to the load plate unit. Conventionally, a plurality of workpieces to be polished are affixed, for example by paraffin, to the lower surface of the load plate unit. In this manner, the workpieces are maintained in position relative to the load plate unit, and are movable therewith, during the polishing operation.

With reference to the foregoing arrangement, dissipation of heat generated in the load plate unit during the polishing operation has not been entirely satisfactory in all applications; and mounting of workpieces to, and removal of the same from, the load plate unit occasionally has not been as convenient as might be desired.

SUMMARY OF THE INVENTION

In accordance with the present invention, the load plate unit is provided with a central upwardly directed opening, and with passageway means communicating with the opening to accommodate circulation of a fluid coolant interiorly of the unit. Cooperatively, the spindle assembly is provided with fluid transmission means for separately directing to the opening fluid coolant and receiving from the opening coolant which has absorbed heat. In this manner, the load plate unit is cooled to compensate for heat developed therein during the polishing operation.

Additionally, the load plate unit is detachable from the spindle assembly; and, at a location remote from the polishing machine, a fluid of suitable temperature may be circulated through the load plate unit for selectively heating or cooling the same to effect softening or solidification of the mounting medium as may be required while the workpieces are being affixed to or removed from the load plate unit. In this manner, mounting of workpieces to, and removal of the same from, the load plate unit are greatly facilitated.

BRIEF DESCRIPTION OF THE DRAWINGS

FIG. 1 is an elevational view, with portions being broken away and shown in section, of a polishing machine incorporating the principles of the present invention;

FIG. 2 is a horizontal view, taken substantially along the line 2–2 in FIG. 1, looking in the direction indicated by the arrows;

FIG. 3 is a vertical median sectional view, on an enlarged scale, of the load plate unit and spindle assembly of the present invention, and of other machine components associated therewith;

FIG. 4 is a horizontal view, taken substantially along the line 4–4 in FIG. 3, looking in the direction indicated by the arrows;

FIG. 5 is a horizontal view on a reduced scale, taken substantially along the line 5–5 in FIG. 3, looking in the direction indicated by the arrows;

FIG. 6 is a foreshortened front elevational view, with portions being broken away and shown in section, of a workpiece-mounting device;

FIG. 7 is a side elevational view, on a reduced scale, of the workpiece-mounting device of FIG. 6; and

FIG. 8 is a horizontal view on a reduced scale, taken substantially along the line 8–8 in FIG. 6, looking in the direction indicated by the arrows.

DESCRIPTION OF THE PREFERRED EMBODIMENT

Referring now to FIG. 1, there is indicated generally by the reference numeral 10 a polishing machine incorporating the principles of the present invention. The polishing machine 10 comprises a framework including a substantially cylindrical housing 12 supported by a base ring 14. Suitably secured to the opposite sides of the housing 12 are the lower ends of vertical columns 16. Extending between the upper ends of the columns 16 is a horizontal bridge member 18 provided with opposed pairs of lateral arms 20. Mounted at the outer end of each of the four arms 20 is a vertical pneumatic piston and cylinder assembly 22 which includes a cylinder 24, a stabilizer sleeve 26 and a piston rod 28.

A cylindrical collar 30 is mounted at the upper end of the housing 12 by means of an annular inclined wall 32. Also mounted in the housing 12 is a main drive motor 34 operatively connected to a conventional speed reducer unit 36 supported in the collar 30. The output shaft of the speed reducer 36, in a known manner, is connected to, and serves to effect rotation of, a generally horizontal polishing wheel assembly 38 shown in FIGS. 2 and 3.

The polishing wheel assembly 38 is comprised of an annular backing wheel 40 and a polishing cloth 42 extending across the upper face thereof. The backing wheel 40 is preferably formed of a metal, such as brass, having a high heat conductivity. The polishing cloth 42, which may for example be either sail cloth or a synthetic nonwoven cloth, is retained in position by means of a ring or hoop member 44 suitably clamped about the outer periphery of the backing wheel 40. In place of cloth, a felt material may be either clamped to the backing wheel 40 or glued thereon. The polishing wheel assembly 38 is surrounded by an annular thin-walled shroud or shield 46 which is normally maintained in the position shown in FIGS. 1 and 2 to accommodate loading and unloading of the polishing machine, and is adapted to be raised to the position shown in FIG. 3 during polishing operations.

A freely flowing polishing slurry is adapted to be fed to the polishing wheel assembly 38 by tubes or spouts 48 extending downwardly from the bridge member 18 as shown in FIG. 1. The slurry is delivered to the spouts 48 through tubing 50 connected to a sump pump unit 52 located in the lower portion of the housing 12. The polishing slurry flowing from the polishing wheel assembly 38 is collected by the inclined wall 32, which serves as a drip pan, and is directed to a drain. The polishing slurry may, by way of example, comprise a polishing compound—such as one having an abrasive base of iron oxide, cerium oxide or zirconium oxide—suspended or mixed in water.

Secured in the lower end of each of the piston rods 28 is a vertical spindle assembly 54 comprised of a spindle 56. Each spindle 56 is provided with a first axial passageway 58 and a second axial passageway 60. The first passageway 58 at its lower end is open and at its upper end communicates with a radial inlet 62 which is adapted to be connected to a source of fluid under pressure. The second passageway 60 at its lower end is closed by a plug 64, intermediate of its ends opens outwardly of the spindle 56 through a radial aperture 66, and at its upper end communicates with a radial outlet 68 which is adapted to be connected to a fluid reservoir or drain. The first passageway 58 and inlet 62 define first passageway means, the second passageway 60 and the aperture 66 and the outlet 68 define second passageway means, and the aforesaid first and second passageway means together define fluid transmission means for a purpose to be presently described.

Connected to each of the spindles 56 intermediate of the ends thereof is a generally horizontal annular pressure cup 70 having engagement means in the form of an annular ridge 72 at the lower surface thereof. Provided between the spindle 56 and the pressure cup 70 is a floating or swivel connection in the form of a universal ball bearing assembly 74. The bearing assembly 74 is maintained in assembled position by a snapring 76 engaged in the spindle 56, and by a snapring 78 engaged in the pressure cup 70. Suitably secured to the spindle 56 im-

mediately above the pressure cup **70** is a collar assembly **80** which serves to shield the bearing assembly **74** from polishing mixture and other foreign material.

Associated with each pressure cup **70** is a generally horizontal circular load plate unit **82** which, as shown in FIGS. **3**, **4** and **5**, is comprised of upper and lower plate sections **84** and **86** secured together by means of a plurality of bolts **88**. The upper plate section **84** is formed with a central opening **90**, a plurality of radial channels **92** which together with the lower plate section **86** define first radial port means, a plurality of inclined radial ports **94** which define second radial port means, and an annular recess **96** which together with an annular recess **97** formed in the lower plate section **86** defines an annular chamber. The ports **92** and **94** and the chamber **96** together define passageway means in the load plate unit **82**. Mounted within the chamber **96** for dividing the same into upper and lower sections in communication at their outer peripheries is an annular baffle panel **98**. A plurality of upwardly and downwardly projecting dimples **100** are formed in the panel **98** and serve to center the panel within the chamber **96**.

Mounted within the central opening **90** of the load plate unit **82** are a pair of vertically spaced seal assemblies **102**. Each seal assembly **102** comprises an outer body portion **104**, and a flexible inner lip portion **106** which is biased radially inwardly by a garter spring **108**. The lower end section of the spindle **56** is adapted to be received in the central opening **90** of the load plate unit **82**. In this cooperative position, the first passageway **58** in the spindle **56** communicates with the bottom portion of the central opening **90** and the radial ports **92**, while the aperture **66** in the spindle **56** communicates with the central opening **90** and the radial ports **94** intermediate of the seal assemblies **102**. The garter springs **108** serve to maintain the flexible lip portions **106** of the seal assemblies **102** in engagement with the adjacent periphery of the spindle **56**, and the seal assemblies **102** and associated garter springs **108** serve as rotary pressure seal means. The upper surface of the upper plate section **84** is provided with engagement means in the form of an annular recess **110** which is adapted to receive the annular ridge **72** of the pressure cup **70**, while the lower surface of the lower plate section **86** is adapted to have affixed thereto work pieces **112**.

Referring now to FIGS. **6** and **7**, there is indicated generally by the reference numeral **120** a workpiece-mounting device which is adapted to be positioned on a work bench at a location remote from the polishing machine **10**. The mounting device **120** includes a generally horizontal housing **122**, and an upstanding rectangular frame **124** supported thereon. Secured to the lower leg of the frame **124** is a circular support assembly **126** having a central upstanding nose portion **128**. The plate assembly **126** is formed with first passageway means **130** which at one end opens at the upper end of the nose portion **128** and at the other end communicates with an inlet opening **132** adapted to be connected to a source of fluid under pressure. The plate assembly **126** is also provided with second passageway means **134** which at one end opens at the side of the nose portion **128** and at the other end communicates with an outlet opening **136** adapted to be connected to a fluid reservoir or drain. The nose portion **128** is of substantially the same size as the lower end sections of the spindle **56**, and is adapted to be received in the central opening **90** of a load plate unit **82**. Mounted on the upper leg of the frame **124** is a vertical pneumatic piston and cylinder assembly **138** which includes a cylinder **140** and a piston rod **142** on the lower end of which is mounted a pressure plate **144**.

In preparation for polishing, a load plate unit **82** is positioned on the support plate assembly **126** of the workpiece-mounting device **120** as shown in FIGS. **6** and **7**. A hot fluid medium such as water or steam is then directed through the inlet opening **132**, the first passageway means **130**, the passageway means of the load plate unit **82**, the second passageway means **134**, and the outlet opening **136**. Next, a thin layer of paraffin, or other suitable mounting substance, having a melting point lower than the temperature of the fluid being circulated through the load plate unit, is evenly applied to the exposed surface of the load plate unit. Workpieces **112** are then positioned in the softened liquified paraffin with the sides of the workpieces to be polished facing upwardly (FIG. **8**). To establish an even coating of paraffin between the workpieces **112** and the load plate unit **82**, the piston rod **142** may be distended for urging the pressure plate **144** downwardly from the position shown in solid lines in FIGS. **6** and **7** to the position shown in dotted lines in FIG. **6** for applying pressure to the workpieces **112**. While pressure is being applied to the workpieces **112**, circulation of hot fluid through the support plate assembly **126** and the load plate unit **82** is discontinued, and a fluid coolant such as cold water is circulated through the assembly **126** and unit **82** for solidifying the paraffin and affixing the workpieces **112** to the unit **82**. Finally, the pressure plate **144** is retracted upwardly, circulation of coolant is discontinued, and the load plate unit and workpieces affixed thereto are removed from the mounting device **120** and inverted for transfer to the polishing machine **10**.

At the polishing machine **10**, load plate units **82** and workpieces **112** affixed thereto are moved onto the polishing wheel assembly **38** and positioned beneath the respective pressure cups **70**. The pneumatic assemblies **22** are actuated to distend the piston rods **28** and the spindle assemblies **54** downwardly until the ridges **72** of the pressure cups **70** are engaged under the desired pressure in the recesses **110** of the load plate units **82**. At the same time, the lower end sections of the spindles **56** are received in the central openings **90** of the load plate units **82**.

Next, the polishing wheel assembly **38** is rotated and polishing material is delivered from the spouts **48** to the surface thereof. Also, a fluid coolant such as cold water is admitted under pressure into the spindle inlet **62**, and is transmitted by the first passageway **58** to the bottom portion of the central opening **90** in the load plate unit **82**. From the opening **90**, the coolant passes through the radial ports **92**, around the baffle panel **98** within the chamber **96**, through the radial ports **94**, and is returned to the central opening **90** intermediate of the seal assemblies **102**. From this point, the fluid is transmitted through the spindle aperture **66** and the second passageway **60**, and is discharged at the spindle outlet **68**. In this manner, the coolant absorbs heat by conduction from the load plate unit **82**, and the load plate unit is thereby cooled to offset the heat developed therein during the polishing operation. As workpieces are being polished, the spindles **56** and pressure cups **70** serve to center the load plate units **82**, and the bearing assemblies **74** and the seal assemblies **102** accommodate free rotation and floating or swiveling of the load plate units **82**.

Upon completion of the polishing operation, drive of the polishing wheel assembly **38**, and delivery of polishing material thereto, are interrupted; the introduction of fluid under pressure into the spindle inlet **62** is interrupted; and the spindle assemblies **54** are retracted and the pressure cups **70** withdrawn from engagement with the load plate units **82**. Then, the load plate units **82** and workpieces affixed thereto are removed from the polishing wheel assembly **38**, inverted, and transferred back to the workpiece-mounting device **120**. Hot fluid is circulated through the load plate unit **82** for softening the paraffin whereupon the workpieces are released and become readily removable.

The diameter of each load plate unit **82** may be substantially the same as, less than, or greater than, the radial width of the annular surface of the backing wheel **40**. Also, it will be appreciated that in the drawings certain elements—for example, the cloth **42** and workpieces **112**—have been exaggerated from the true scale for sake of clarity of illustration.

While there has been shown and described a preferred embodiment of the present invention, it will be understood by those skilled in the art that various rearrangements and modifications may be made therein without departing from the spirit and scope of the invention.

We claim:

1. In a polishing machine having framework, a polishing wheel assembly mounted on the framework on a vertical axis, means for rotating the polishing wheel assembly, at least one vertical spindle assembly supported from the framework above the polishing wheel assembly, a generally horizontal circular load plate unit adapted to have workpieces affixed to the lower surface thereof for engagement with the polishing wheel assembly, and means for selectively establishing interengagement between the spindle assembly and the load plate unit, the improvement which comprises said load plate unit having a central opening, said load plate unit having passageway means communicating with said opening to accommodate circulation of fluid interiorly of said unit for effecting cooling thereof, and said spindle assembly having fluid transmission means for separately directing fluid to and receiving fluid from said opening, said passageway means comprising an annular chamber, first radial port means intermediate said central opening and said annular chamber for directing fluid to said chamber, and second radial port means intermediate said annular chamber and said central opening for receiving fluid from said chamber.

2. The improvement of claim 1 including means dividing said chamber into upper and lower sections in communication at their outer peripheries; and wherein said first radial port means extends between said central opening and the inner periphery of said lower chamber section, and said second radial port means extends between the inner periphery of said upper chamber section and said central opening.

3. The improvement of claim 1 wherein said spindle assembly has a lower section that projects into said central opening, said fluid transmission means comprises first passageway means in said spindle assembly which is adapted to be connected to a source of fluid under pressure and communicates with said central opening adjacent said first radial port means, and said fluid transmission means further comprises second passageway means in said spindle assembly which communicates with said central opening adjacent said second radial port means and is adapted to be connected to a fluid reservoir.

4. The improvement of claim 3 wherein said interengagement means is comprised of swivel connection means, and including axially apaced seal means in said opening between said lower section of said spindle assembly and said load plate unit on opposite sides of said second radial port means.

5. For use in a polishing machine, a circular load plate unit having a central axial opening at one side of said unit, and having passageway means communicating with said opening to accommodate circulation of fluid interiorly of said unit, said passageway means comprising an annular chamber, first radial port means intermediate said central opening and said annular chamber for directing fluid to said chamber, and second radial port means intermediate said annular chamber and said central opening for receiving fluid from said chamber.

6. The load plate unit of claim 5 including means dividing said chamber into upper and lower sections in communication at their outer peripheries; and wherein said first radial port means extends between said central opening and the inner periphery of said lower chamber section, and said second radial port means extends between the inner periphery of said upper chamber section and said central opening.

7. The load plate unit of claim 6 including axially spaced flexible seal means in said opening on opposite sides of said second radial port means.