KNOT PICKER FOR BRUSH MAKING MACHINES

Filed March 5, 1969 2 Sheets-Sheet 1

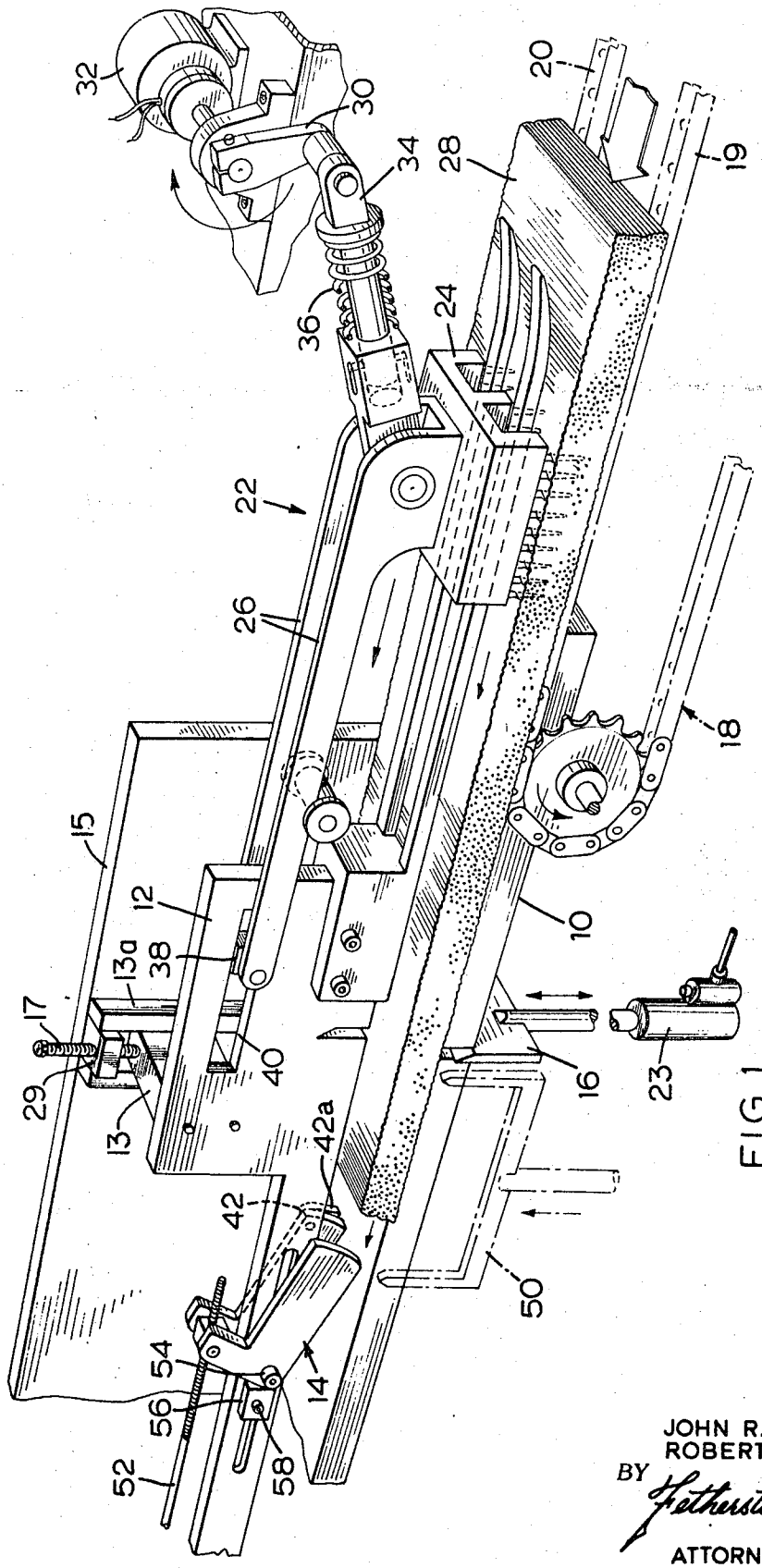

FIG. 1

INVENTORS
JOHN R. GARDNER
ROBERT D. REICKER
BY Fetherstonhaugh & Co.
ATTORNEYS

KNOT PICKER FOR BRUSH MAKING MACHINES

Filed March 5, 1969 2 Sheets-Sheet 2

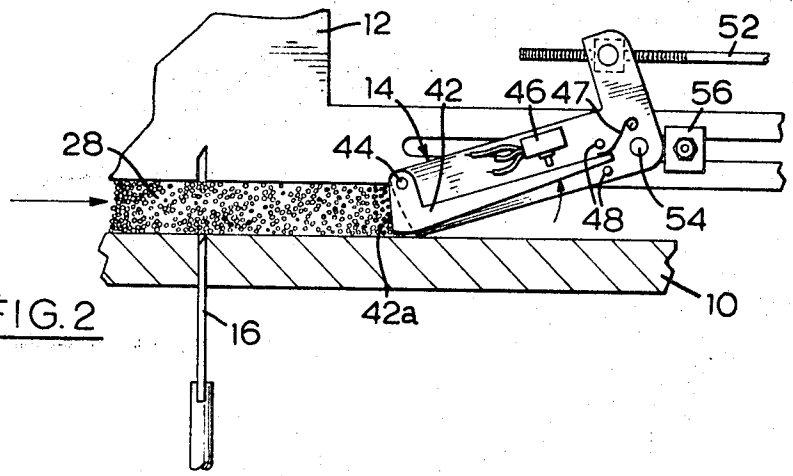

FIG. 2

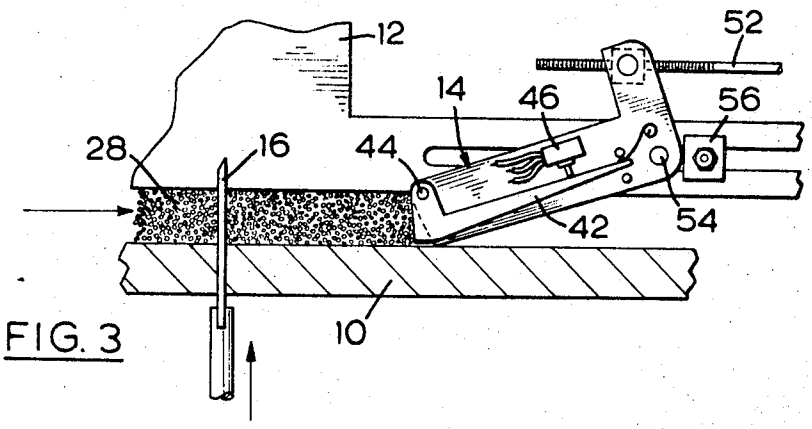

FIG. 3

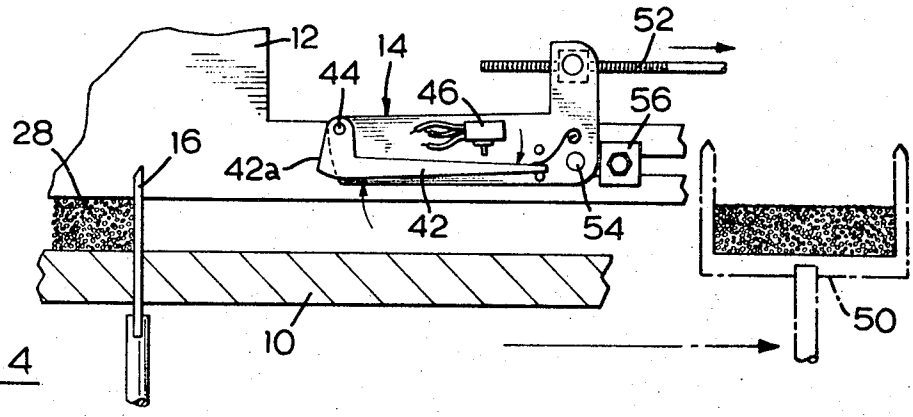

FIG. 4

INVENTORS
JOHN R. GARDNER
ROBERT D REICKER
BY Fetherstonhaugh & Co.
ATTORNEYS

United States Patent Office

3,556,602

Patented Jan. 19, 1971

1

3,556,602

KNOT PICKER FOR BRUSH MAKING MACHINES

John R. Gardner and Robert D. Reicker, Saint John, New Brunswick, Canada, assignors to T. S. Simms & Co., Limited, Saint John, New Brunswick, Canada

Filed Mar. 5, 1969, Ser. No. 804,517
Int. Cl. A46d *1/04*
U.S. Cl. 300—7 3 Claims

ABSTRACT OF THE DISCLOSURE

A knot picker for brush making machinery characterized by a bristle receiving pocket for defining a knot in which the portions of the pocket can be readily changed to define knots of different sizes and shapes. Within the pocket there is incorporated a pressure sensing device so that the number of bristles packed in the pocket can be governed by sensing the packing pressure and interrupting the feed of bristles to the pocket when the pressure exceeds a preselected amount.

This invention relates to knot pickers for brush making machines and is particularly concerned with a knot picker characterized by a bristle receiving pocket having means for sensing the packing pressure within a bristle knot as it is being formed within the pocket whereby the size of the knot can be accurately determined by interrupting the feeding of the bristles to the pocket when the pressure has reached a preselected value.

In the manufacture of a brush, the first step is to collect together a predetermined quantity of bristles to form a bristle knot. The knot is then passed into a ferrule and fixed in place with or without wedges by a cementing material, the final step being the connection of a handle to the ferrule. In the known semi-automatic machines for brush manufacture, the common mechanism employed for collecting together the bristles to form a knot consists of a rotatable disc mounted on a horizontal axis and containing two or more recesses in its outer periphery into which bristles are fed for a certain length of time. After this time has elapsed, a knife edge is caused to move over the entrance passageway into the recess as to separate the bristles contained within the recess from the bristles being fed thereto. By making sure that the feeding arrangement always is feeding an excess of bristles, a close approximation of an accurately weighed knot can be formed by the timing principle. This is particularly true of the smaller size bristle knots.

However, there are disadvantages to the aforementioned timed method of forming a bristle knot. With the larger sized knots, variations in the depth of the bristle feeding train result in variations of the size of the knots which can reach serious proportions. Of equal importance is the fact that off-sized bristle knots are not usually detected until some later stage in the brush forming process so that it is possible to have a fairly large number of improperly sized bristle knots formed before it becomes apparent to the operator that the machine needs adjustment. This result is due, of course, to the timing principle of judging the proper weight of a bristle knot as the timing mechanism does not take into account variations within the depth of the bristle feeding train.

Accordingly, it is a prime object of this invention to provide a knot picker for a brush making machine which does not depend on the timing principle for determining the weight of the formed bristle knots.

It is a more specific object of the invention to provide a knot picker which is characterized by a pressure sensing function so that the weight of the formed knot is

2

determined by sensed pressure within the knot as it is being formed so that the feeding of bristles to the knot forming pocket can be interrupted when the pressure of the bristles already contained in the pocket has reached the desired limit.

Several advantages accure from the principle of determining the weight of a bristle knot by sensing the pressure of the packed bristles. The chief advantage is that variations within the depth of the bristle feeding train are automatically accommodated as it does not matter whether the train feeds the bristle forming pocket slowly or quickly. All that matters is that when the desired number of bristles has been packed into the pocket, the pressure of the packing will have reached a predetermined point and the feeding of bristles to the pocket can be automatically interrupted. Secondly, with the pressure measuring principle as distinct from the timing principle, it is possible to make the pocket packing step the key one by which all of the other later brush making steps are governed. This is an important advantage as it means that should the feeding of bristles to the pocket be interrupted as, for example, by an exhaustion of the bristle stocking bin, the machine as a whole can be made to pause until the situation is corrected. This is done by designing the machine as a whole so that each brush making step subsequent to the knot forming step will not be carried out until the knot forming step has been completed. The important point here is, of course, that the knot forming step is never completed until the proper number of bristles has been packed into the bristle forming pocket, i.e. until the pressure built up within the bristle knot has reached such a point that the pressure sensing device is triggered whereby the feeding of bristles to the pocket is interrupted and the formed bristle knot picked up for transfer to the ferrule feeding stage.

An additional advantage of the sensing principle over the timed principle is that the machine can accommodate a larger range of knot weights. With the timed principle the speed of the machine is governed by the largest knot to be picked whereas a machine in accordance with the present invention will change output speeds to suit the weight being picked.

The invention will be more thoroughly understood from the following description of a preferred embodiment thereof as read in conjunction with the accompanying drawings.

In the drawings,

FIG. 1 is a perspective view, somewhat schematic in parts, of the knot picker section of a brush making machine in accordance with the present invention;

FIG. 2 is a side elevation view taken from the rear of the apparatus shown in FIG. 1 for illustrating in greater detail the knot picker of the invention; and

FIGS. 3 and 4 are views similar to FIG. 2 but showing the apparatus of FIG. 2 at different stages in the cycle of forming a bristle knot.

Referring to FIG. 1, it should be understood that while the illustrated apparatus appears to be shown in some detail, it is actually idealized to some extent in the interests of clarification. It should also be understood that the illustrated apparatus is only a small portion of an entire brush making machine, namely that portion which is designed to form a knot of bristles. While the machine also is capable of feeding the knots into brush ferrules and inserting wedges when required, those parts of the machine which carry out the latter functions are not illustrated.

The bristle knot forming pocket is comprised of a lower plate **10**, the lower edge of a top vertically aligned plate **12**, a vertically reciprocating knife **16** and a bristle stop **14** consisting of a pair of rectangular bar-like ele-

ments. The position of both the plate **12** and the bristle stop **14** can be changed in order to form bristle knots of different sizes. This feature itself is an advantage over the previously described prior art rotating disc knot forming method as with the latter it was necessary to remove sections from the edge of the disc containing the knot forming pockets and replace them by new sections containing different sized pockets. As contrasted with the former rather long and involved procedure, it is a relatively simple matter to adjust the position of the top plate **12** and the bristle stop **14** to change the size of the knot forming pocket. Further, infinitely variable adjustment is possible with the apparatus of the present invention. To provide for vertical adjustment of top plate **12**, the latter is fixed to a pair of spaced slide members **13** carried by slideways **13*a*** attached to frame **15**. Only one of the slides **13** is illustrated and it will be understood that the other slide is positioned on the left side of FIG. 1. Manually rotatable screws **17** are threaded in blocks **29** which are located at the upper ends of the slideways **13*a***. The screws **17** are secured to the slides **13** to raise and lower the top plate **12** relative to the frame **15** and lower plate **10**.

Knife **16** is operated by a solenoid **23** which is electrically controlled from switch **46** (FIG. 2). The switch **46** is incorporated within the electrical circuit that controls the solenoid so that closure of the switch **46** feeds current to the solenoid **23** to move the knife **16** upwardly.

It will be appreciated that plate **10**, in addition to its function of defining the lowermost edge of the bristle forming pocket, also acts as a feeding plate for moving bristles into the pocket. The bristles are fed onto the top surface of plate **10** by an endless conveyor **18** comprised of a pair of side by side chain members **19** and **20**. It should be understood in this regard that it is not the function of the conveyor **18** to feed the bristles directly into the knot forming pocket but only onto the top surface of plate **10** at a point spaced from the pocket. From this point, the bristles are fed into the pocket by means of a rake mechanism **22** essentially consisting of a spiked block member **24** and an arm **26** which is caused to move in such a way that the block is periodically dropped into the bristle train **28**, dragged towards the pocket and then lifted out of the bristle train and moved back to its position illustrated in the drawing. As is explained in greater detail hereinafter, the operation of the rake is keyed to the pressure sensing device attached to the bristle stop **14** so that the raking operation stops when the desired quantity of bristles has been packed into the pocket. The operation of feed conveyor **18** is keyed to the operation of the rake so that when the rake stops operating, the conveyor also ceases operation.

As can be appreciated from FIG. 1, rake **22** is operated from a crank arm **30** fixed to a motor **32** through a connecting link **34**. The latter is provided with a spring **36** which serves as a pressure relief when knife **16** is passed upwardly through a newly formed knot. The opposite end of the arm **26** is pivotally fixed to a sliding block **38** arranged for sliding movement in a slot **40** in plate **12**.

It should be understood that the foregoing describes a preferred apparatus for feeding bristles to the knot forming pocket but that variations within the feeding method and apparatus for carrying out the method would be possible without departing from the scope of the present invention. The invention primarily relates to the previously described apparatus for defining a bristle knot forming pocket so that the size of the pocket can be readily changed and to the apparatus described hereinafter for sensing the pressure of the bristles packed within the pocket as a means of gauging the weight of the knots being formed.

As has been previously described, the two ends of the bristle forming pocket are defined by the bristle stop **14** and the knife **16**. In this regard it will be appreciated that the knife **16** only moves into position to close off the entrance to the pocket when the proper number of bristles has been packed into the pocket.

The mechanism for detecting the fact that the desired number of bristles has been packed into the pocket is attached to the bristle stop **14**. For an understanding of this mechanism, reference should be made to FIGS. 2 to 4. It is the primary purpose of these figures to show the operation of the pressure sensing mechanism and as this device is fixed to the rear side of bristle stop **14**, these views are taken from the rear of the machine as a whole. The pressure sensing mechanism consists of an L-shaped element **42** which is pivotally fixed to one of the bar-like elements of the bristle stop by a pivot pin **44**. One arm of the L-shaped element is arranged to move into contact with a switch **46** when the pressure with which the bristles are packed in the pocket is sufficient to overcome the bias of a small leaf spring **47** which bears against this arm of element **42**. A pair of stop members **48** limits the travel of the arm.

As can be appreciated from FIGS. 3 and 4, element **42** is shaped and sized in such a way that its base edge **42*a*** protrudes beyond the forward edges of the bar-like elements of the bristle stop. This guarantees that the switch **46** will always be tripped before the face **42*a*** is moved by the bristles to a point behind the forward edges of the bristle stop elements.

It can be seen that the pressure required to trip switch **46** is governed by the bias of spring **47**. Thus, the same amount of pressure is required to trip the switch, regardless of the size of the bristle knot being formed. It can also be seen that the pressure required to trip switch **46** is always the same, thereby guaranteeing consistency from knot to knot in any one production run.

As previously mentioned, all of the brush forming steps which are performed subsequent to the packing of the bristles within the pocket are conditional upon the proper operation of the pressure sensing mechanism. This means, of course, that the tripping of switch **46** governs the operation of knife **16** in the first instance and also governs the subsequent steps. For example, once knife **16** has moved upwardly to close off the entrance into the pocket, a knot transfer jaw **50**, which is shown in dotted lines in FIG. 1, moves upwardly to grip the newly formed knot, after which the bristle stop **14** is moved to the position shown in FIG. 2. Once this has occurred, the transfer jaw moves the bristle knot to the right, with the top of the knot pressed against the lower edge of plate **12**, for the next step in the operation as a whole which is the packing of the bristle knot into a ferrule. The physical means for moving the bristle stop to the FIG. 4 position consists of a rod **52** which is moved to the right (FIGS. 2–4) as to cause the bristle stop to rotate about its pivot point **54**. In this regard, it will be appreciated, of course, that this particular system for moving the bristle stop is only a preferred arrangement and other suitable systems could be employed without departing from the scope of the invention.

As previously mentioned, it is possible to adjust the position of the bristle stop and this is accomplished by pivotally mounting it at pivot **54** to an adjustable block **56** which can be locked in position by means of a screw head **58**.

It should also be understood that the knot picker of the invention is adapted to the formation of bristle knots using nylon or natural bristles or bristles formed of any other material. While bristles formed of different materials will react differently with respect to the pressure built up within a knot as it is being packed, the packing characteristics will be consistent within any one production run as it is not usual to vary the type of bristle being used in any particular production run. The preproduction adjustment necessary for any production run consists of determining the proper size of pocket to form a bristle knot of the desired weight. This is normally done by trial and error by forming a few knots and adjusting the posi-

tion of the bristle stop or the vertical height of plate **12** until the knots produced meet the required standard. In the normal course, it is not necessary to alter the adjustment at any later stage in the production run because the packing characteristics of any one batch of bristles are usually quite consistent. As previously mentioned, one of the chief advantages of the knot picker of the invention is that should the bristle supply become exhausted, the machine pauses in its operation until the bristle supply situation has been corrected. This can be important at times as it is usaul for the operator to feed bristles onto conveyor **18** by hand and if the operator must leave the machine at any time, it is not necessary that the machine be shut down as it will come to an automatic halt when the bristle train becomes exhausted. This is so because the machine steps which follow the full packing of a pocket do not occur until a pocket has been filled. Thus, for example, if at the time the supply of bristles on conveyor **18** becomes exhausted, less than the number of bristles required to form a full knot have been moved into the pocket, while rake **22** will continue to operate, the pressure sensing mechanism carried by the bristle stop will not be triggered so that the upward movement of knife **16** or any of the other subsequent machine movements will not take place. The advantage of this arrangement can be seen by comparing it with the earlier machines wherein all of the brush forming steps subsequent to the formation of the knot continue to take place even though the bristle supply has run out. Thus, for example, with the earlier machines the feeding of ferrules into position for receiving knots would continue as would the feeding of wedges into the ferrules. Of course, without knots being formed, the result would be to feed out of the end of the machine a continuous supply of empty ferrules and loose wedges.

Of equal or even greater importance is the fact that once the machine has been properly adjusted, it is impossible to produce improperly formed brushes because, as previously stated, all of the brush forming steps subsequent to the packing of the pocket are conditional upon the packing being carried out in the proper manner. With the previous machines, where the packing of the pocket was a timed operation, it was possible to feed a thin bristle train into the pocket with the result that when the bristle knots are moved into ferrules and wedged, the wedged bristle knots are not sufficiently tight within the ferrules. In this case, not only does the machine feed out improperly packed ferrules and loose wedges but it also feeds out loose bristles which can only be recovered for re-use at considerable cost.

What we claim as our invention is:

1. A knot picker for a brush making machine comprising a conveyor for moving a bristle train with the bristles being arranged in a horizontal plane, a first plate for defining the lower boundary of a knot forming pocket, said conveyor being adapted to feed said bristles onto the top surface of said first plate, a second plate being mounted in a vertical plane above said first plate and adapted for adjustment up and down with its lower edge defining the top boundary of said knot forming pocket, bristle stop means positioned between said plates for defining one end of said pocket and a movable knife adapted to move into position between said plates to define the other end of said pocket, said bristle stop means being adapted to move out of its position between said plates to permit lateral movement of a formed bristle knot outwardly of said pocket, and pressure sensing means carried by said bristle stop means for detecting a build-up of pressure within a bristle knot as it is being formed in said pocket, said pressure sensing means being electrically connected to means for moving said bristle stop out of its position between said plates and to said knife whereby the build-up of a predetermined pressure within a bristle knot will cause said pressure sensing means to move said knife into position to close off the entrance into said pocket and subsequently move said bristle stop out of position between said plates to permit removal of a formed bristle knot from said pocket.

2. A knot picker as claimed in claim **1** in which said bristle stop means comprises a pair of rectangular bar-like elements being arranged one on either side of said top plate by pivot means whereby said bristle stop means may be moved out of position between said plates by causing said bar-like elements to pivot upwardly about their pivot means; said pressure sensing means consisting of an L-shaped element pivotally fixed to one of said bar-like elements and having its base edge protruding beyond the forward edges of said bar-like elements and a switch fixed to the same element in a position to be tripped by the other arm of said L-shaped element when the build-up of pressure within a knot being formed within the said pocket is sufficient to overcome the bias of a spring bearing against the latter arm of the L-shaped element.

3. A knot picker as claimed in claim **2** in which said rectangular elements forming said pressure stop means are provided with upstanding ears which are pivotally connected to a block member positioned therebetween and an adjustable reciprocal rod element fixed to said block whereby said rectangular elements can be rotated upwardly by a movement of said rod in a direction generally parallel to the longitudinal axis of said pocket.

References Cited

UNITED STATES PATENTS

3,215,472	11/1965	Zahoransky	300—7
3,367,719	2/1968	Carlson	300—7

GRANVILLE Y. CUSTER, Jr., Primary Examiner