United States Patent

[11] 3,552,343

[72] Inventor Gordon R. Scott
Calgary, Alberta, Canada

[21] Appl. No. 790,284
[22] Filed Jan. 10, 1969
[45] Patented Jan. 5, 1971
[73] Assignee Pan American Petroleum Corporation
Tulsa, Okla.
a corporation of Delaware

[54] **DRILLING SHIP MOORING SYSTEM**
2 Claims, 5 Drawing Figs.

[52] U.S. Cl. 114/0.5, 114/230
[51] Int. Cl. B63b 35/44, B63b 21/00
[50] Field of Search 114/0.5, 0.5D, 230

[56] **References Cited**

UNITED STATES PATENTS

3,191,201 6/1965 Richardson et al. ..... 114/0.5(D)X
3,279,404 10/1966 Richardson 114/05

Primary Examiner—Trygve M. Blix
Attorneys—Paul F. Hawley and John D. Gassett

ABSTRACT: An anchoring system for a drilling vessel floating on a body of water. A plurality of anchor cables extend from "moonpool" anchor winches mounted on the deck of the drilling vessel which surrounds the moonpool. These anchor lines go downwardly along the wall of the moonpool and then outwardly to anchors spaced from the ship. There are two "bow" anchor winches mounted on the bow of the ship. When the ship is in its "normal" or "neutral" position, the anchor lines from these extend outwardly perpendicular to the longitudinal axis of the drilling vessel. By taking up on one of the bow anchor lines and letting out on the other, the ship can be made to rotate about its moonpool for approximately a total of 150°. At the same time, the moonpool anchor lines are let in or payed out, from the moonpool anchor winches, as necessary to retain the desired tension on each such anchor line.

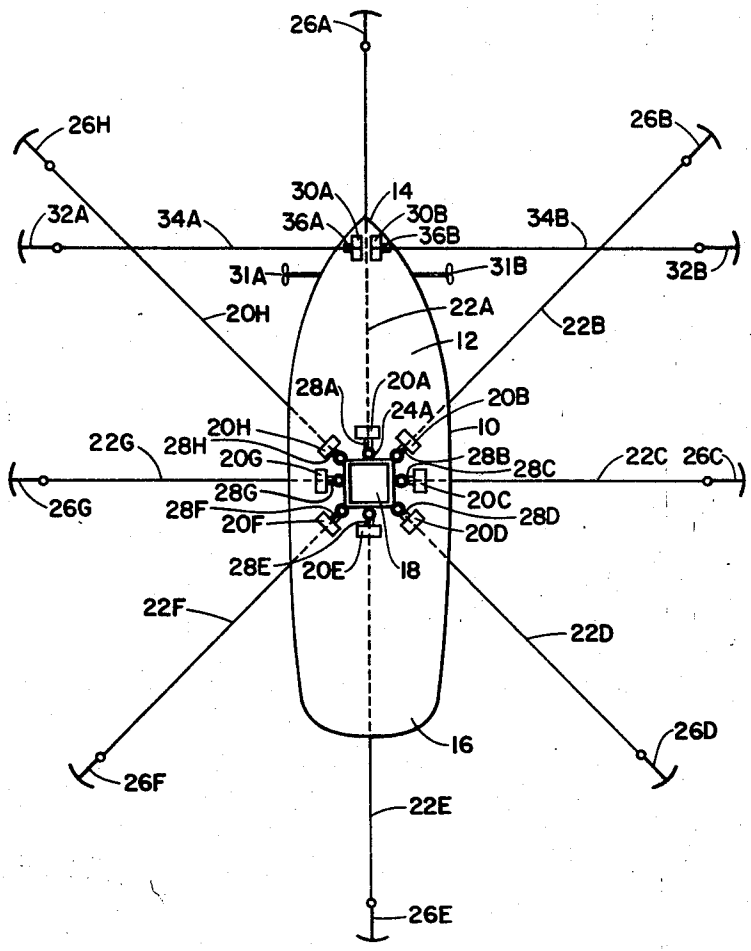

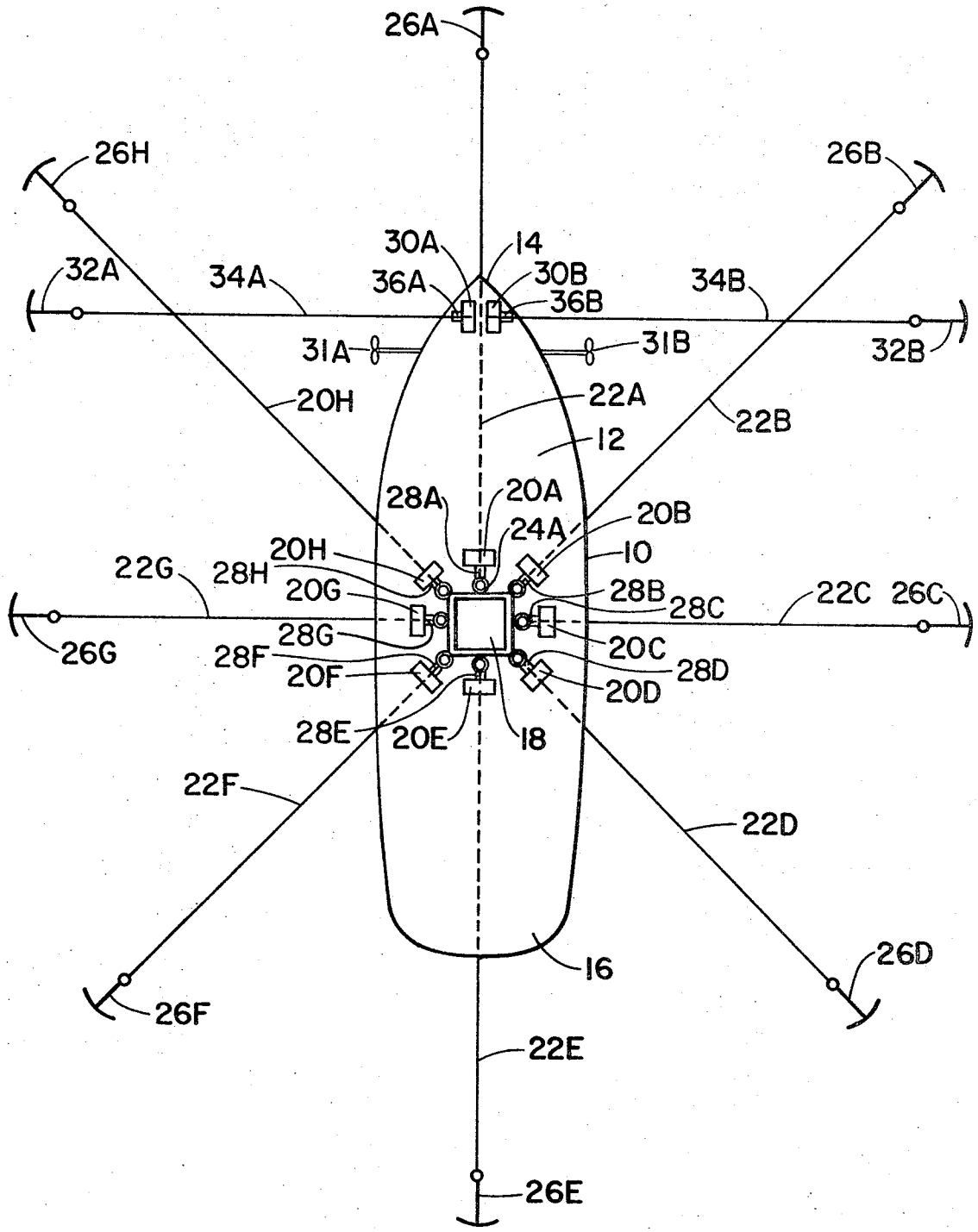

FIG. 1

INVENTOR.
GORDON R. SCOTT
BY John D. Gassett
ATTORNEY

FIG. 2

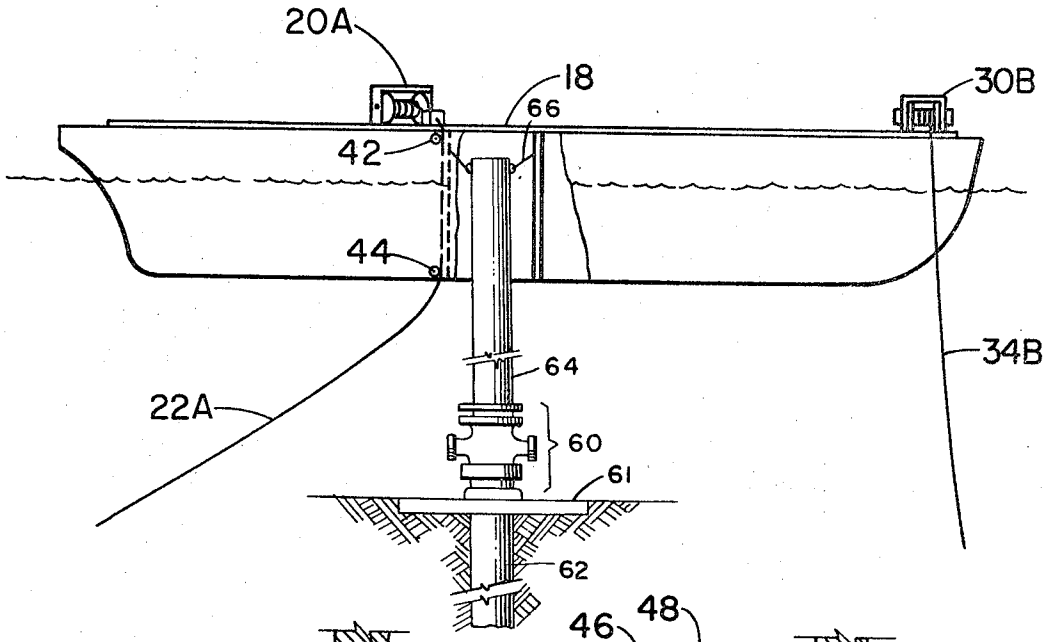

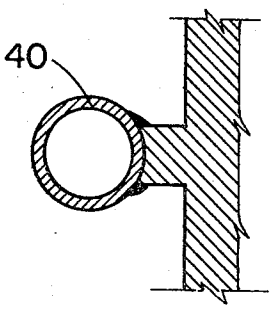

FIG. 3

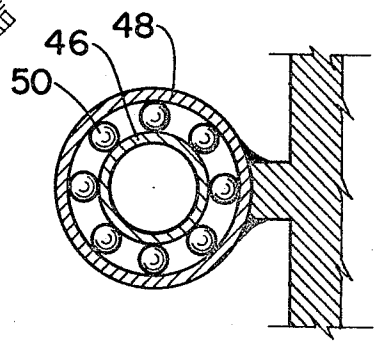

FIG. 4

INVENTOR.
GORDON R. SCOTT
BY
John D. Gassett
ATTORNEY

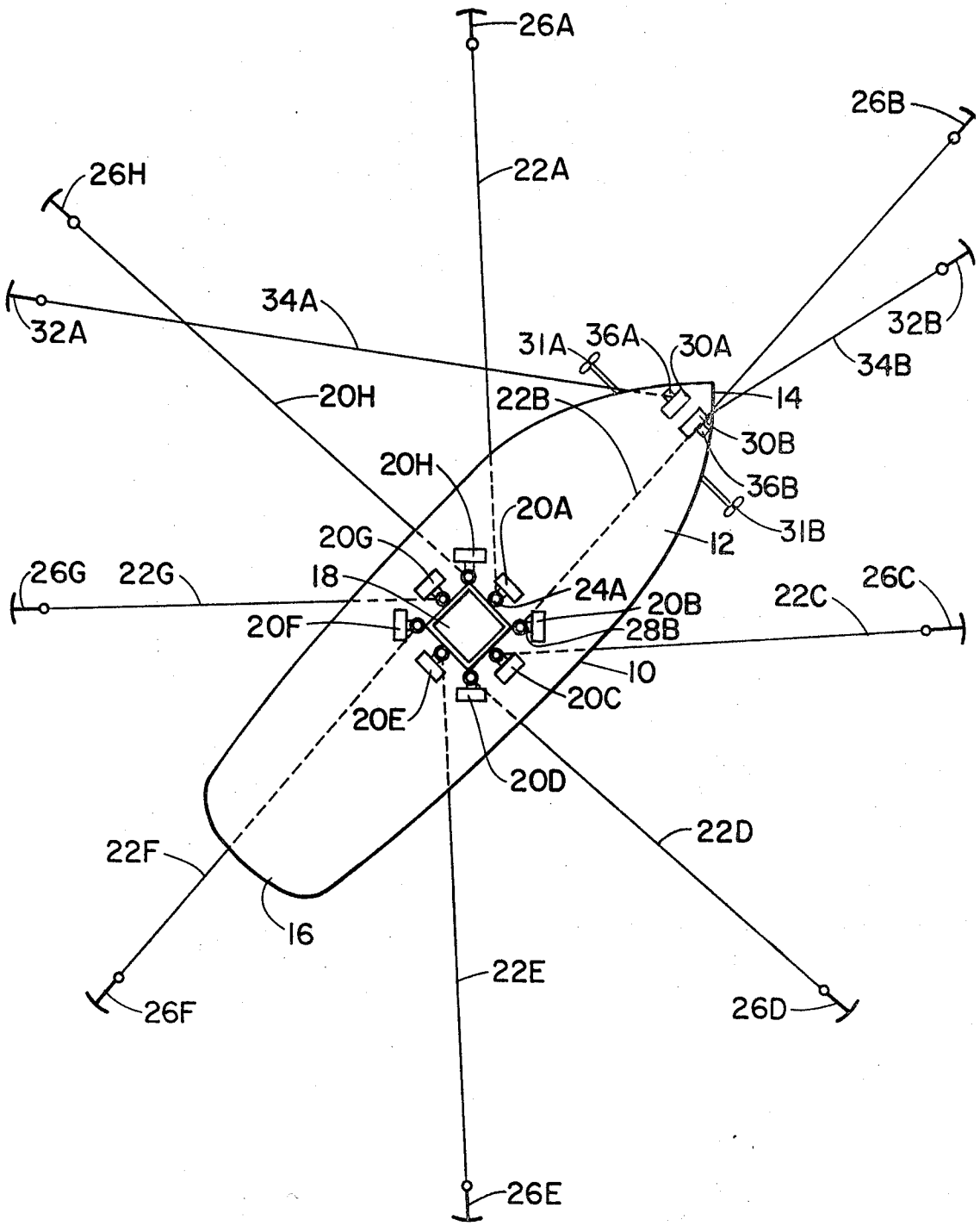

FIG. 5

INVENTOR.
GORDON R. SCOTT
BY John D. Gassett
ATTORNEY

DRILLING SHIP MOORING SYSTEM

BACKGROUND OF THE INVENTION

1. Field of the Invention

This invention is concerned with the anchoring of floating structures. More particularly, the invention is concerned with an anchoring system for a drilling vessel whereby the drilling vessel can be rotated through a selected arc by the anchoring system.

2. Setting of the Invention

Recently the drilling of oil and gas wells has been extended into water-covered areas. In relatively shallow water these wells are drilled from fixed platforms. A common type of fixed platform is one which supports a drilling structure above the surface of the water by long columns of pipe which extend from the platform into the bottom of a body of water. Drilling operations are then conducted from the platform deck very much like land drilling operations.

As drilling operations are conducted in deeper and deeper water, e.g., 600 feet or more, it becomes very impractical economically to construct drilling platforms. In such deeper water it is becoming common practice to drill from floating vessels. One of the problems in drilling from floating vessels is to maintain the ship in an exact position, or at least that part of the ship through which drilling operations are conducted. One type drilling ship has a vertical opening called a moonpool in the midsection of the ship. It is through this moonpool that drilling operations are conducted. In this case it is desired that the moonpool stay at a fixed position, but the ship is permitted to rotate about the moonpool. The main reason why it is desired that the ship be permitted to rotate is so that it can face or head into the waves. In that type ship it has been suggested to place a rotatable cylinderlike member within the moonpool and secure the mooring cables to the rotatable cylinder. This theoretically would give the ship 360° motion. In such a system the main problem is one of construction. It is difficult and expensive to build a cylinder rotatably mounted within the moonpool of such strength as required to hold the ship on position.

SUMMARY OF THE INVENTION

This invention concerns a floating drilling vessel having an elongated hull with a bow and stern. A vertical well extends through the hull intermediate the bow and stern. A plurality of anchor winches are spaced about the vertical well and are fixed to the hull. Anchor lines extend from the winches down through the side of the well to beneath the ship and onto anchors which are spaced horizontally from the hull and radially about the well. There are two bow anchor winches. Lines extend from the anchor winches to anchors on opposite sides of the bow. The ship is rotated an arc about the moonpool by taking up one of the bow anchor lines and letting out on the other. When this occurs, the moonpool anchor winches are adjusted to maintain the desired tensioning on each of the moonpool anchor lines.

Various objects and a better understanding of the invention will become apparent from the description which follows when taken in conjunction with the drawings.

DRAWINGS

FIG. 1 illustrates a plan view of the drilling vessel and its anchoring system.

FIG. 2 illustrates how the anchoring lines extend downwardly through the moonpool.

FIG. 3 illustrates one vertical guide for the anchor line as it extends through the moonpool.

FIG. 4 illustrates another guide.

FIG. 5 illustrates the arrangements of the anchor lines when the ship has been rotated from its neutral or normal position.

DESCRIPTION OF PREFERRED EMBODIMENTS

Attention is first directed to FIG. 1 which illustrates a ship having a hull **10** with a deck **12** and having a bow end **14** and a stern end **16**. The ship has a moonpool or vertical well **18** intermediate the bow and the stern. As shown in FIG. 2, this moonpool **18** extends vertically through the ship. It is through this opening that drilling operations are conducted. A riser pipe **64** is suspended from the ship by cables **66**. The upper end of the riser pipe terminates in the vicinity of vertical well **18** and the lower end is connected to a wellhead **60** on the floor of the body of water in a conventional way. Surface casing **62** having pad **61** supports the wellhead in a known manner. The drilling derrick and other equipment have not been shown as such equipment is well known in the art and in and of itself forms no part of the invention.

There are two sets of anchor winches; one set can be called the "moonpool" anchors and the other the "bow" anchors. The moonpool anchor includes a plurality of anchor winches **20** which surround the moonpool **18**. Each anchor winch **20A** to **20H** contains its associated anchor line **22A** to **22H** which extends downwardly through its associated vertical guide **24A** through **24H** to its respective anchor **26A** through **26H**. These anchor lines contain tension measuring devices **28A** to **28H**. These can be conventional commercially available tension measuring devices. These anchor lines extend outwardly to anchors **26A—26H**. When the ship is in its "normal" or neutral position as shown in FIG. 1, the various anchor lines are then positioned the shortest distance from their respective anchors.

There is a first bow anchor winch **30A** and a second bow anchor winch **30B**. These are connected to anchors **32A** and **32B** by anchor lines **34A** and **34B**, which, when the ship is in its normal position, extend perpendicular to the longitudinal axis of the drilling vessel **10**. These anchor lines have tension measuring devices **36A** and **36B** associated therewith. Bow thrusters **31A** and **31B** are provided on the sides of the bow of the ship to aid in rotating the ship.

The moonpool anchor lines (only one shown in FIG. 2 for simplicity) pass downwardly through a vertical tube, such as tube **40** in FIG. 3, and on each end of tube **40** pass over rollers **42** and **44**. If desired, the vertical tube of FIG. 3 can be modified to include an inner tube **46** and an outer tube **48**. The two are separated by ball bearings **50**. This permits the inner tube **46** to rotate more freely and thus ordinarily give the cables or anchor lines **22A** less frictional resistance.

Attention is next directed to FIG. 5. There, the drilling vessel is shown rotated 45° from that of the position of FIG. 1. Assuming that the ship in FIG. 1 is headed north, then the ship in FIG. 5 is headed northeast. This has been accomplished by taking up on bow anchor line **34B** and letting out on bow anchor line **34A**. Each of the moonpool anchor lines have had their winches adjusted so that proper tension remains on each anchor line. The ship is rotated 45° as shown in FIG. 5; however, no anchors have been required to be moved. This can be done without use of thrusters on the vessel. However, thrusters **31A** and **31B** are available if the additional thrust is needed. Further, moonpool **18** has been maintained in its desired position of FIG. 1. Thus, drilling operations have been permitted to continue although the ship has rotated 45°. If a twin screw drilling vessel were used, its counter rotating propulsion screws could be used to obtain some torsional effect to offset a certain amount of bow load due to storm forces.

The turning of a vessel will effectively lengthen the distance to the anchor from the fair-lead on each chain. Obviously, this will increase the radius of arc of the catenary and increase the tension on the chain. However, this tension increase should be equal on opposing chains when there are no wind or wave forces. The increase in length of catenary will ordinarily not be too great, possibly in the order of 10 feet or to 20 or 25 feet for the corner chain, such as chain **20H**, of a 30-foot square moonpool when the ship rotates 90°. Ordinarily, the ship will

be turned slowly, e.g., a turn at the rate of 60° in one hour. If a chain has to be taken up or let out to obtain the proper tensioning on that anchor chain, the amount will be small. There is ordinarily plenty of time to do this manually and the tension gauge can be observed while the adjustments are being made.

There should be very little lateral movement of the ship. However, it is known that the riser pipe can deviate 5° from the vertical by the swivel joint which is ordinarily near the well head. In 250 feet of water, this allows lateral movement at the water surface of approximately 20 feet from the vertical, or a total horizontal movement of 40 feet. Ordinarily, not over one-half of this movement will be encountered when my system is employed.

While the above embodiments have been shown in detail, various modifications can be made thereto without departing from the spirit or scope of the invention.

I claim:

1. A method of mooring a vessel floating in a body of water, said structure having an elongated hull with a vertical well extending therethrough intermediate the stern and bow of said hull, anchor winches spaced about said well and having anchor lines extending from each said winch to an associated anchor secured to the bottom of said body of water, a first and a second bow winch each having anchor lines extending to an associated anchor a spaced laterally of said hull, which comprises: changing the direction of said hull by taking up anchor lines on one of said bow winches while paying out the anchor line on the other, and simultaneously adjusting the anchor winches mounted on said hull about said vertical well to maintain the desired tension thereon while maintaining said anchor winches in a fixed relation to said hull.

2. A method as defined in claim 1 including the step of simultaneously maintaining a riser pipe from the vertical well of said ship to a well head on the floor of said body of water so that drilling operations can be conducted therethrough while the direction of the hull of said ship is being changed.