United States Patent

[11] 3,543,760

[72] Inventor Lee R. Bolduc
Minneapolis, Minnesota

[21] Appl. No. 711,949
[22] Filed March 11, 1968
[45] Patented Dec. 1, 1970
[73] Assignee Medical Plastic Inc.
Minneapolis, Minnesota
a corporation of Minnesota

[54] **DISPOSABLE GROUND PLATE ELECTRODE**
19 Claims, 10 Drawing Figs.

[52] U.S. Cl. 128/416
[51] Int. Cl. A61n 3/06
[50] Field of Search ..... 128/303.13–19, 416—418, 404, 410, 413, 416; 24/243, 243.15; 339/228— 30, 261, 259, 259F, 255, 255P

[56] **References Cited**

UNITED STATES PATENTS

1,398,592	11/1921	Hohnsbeen	24/67.5
1,662,446	3/1928	Wappler	128/416
1,698,379	1/1929	Taylor	339/261
1,853,814	4/1932	Huth	128/416
1,967,815	7/1934	Frieberg	128/416
3,267,452	8/1966	Wolf	340/249

Primary Examiner—Richard A. Gaudet
Assistant Examiner—John B. Mitchell
Attorney—Burd, Braddock & Bartz

ABSTRACT: An electrosurgical unit using high frequency currents having an active electrode and a patient indifference ground plate electrode. The plate electrode is a disposable, flexible, autoclavable ground electrode having a flexible cardboard base carrying an aluminum foil skin. The metal skin of the disposable electrode is divided with indicator lines to outline approximately 100 square inches minimum surface area required for proper grounding of the patient. A releasable connector is used to attach a ground cable to the plate electrode. The connector has a flat metal foil skin engaging surface to provide a large surface of contact between the connector and the foil skin.

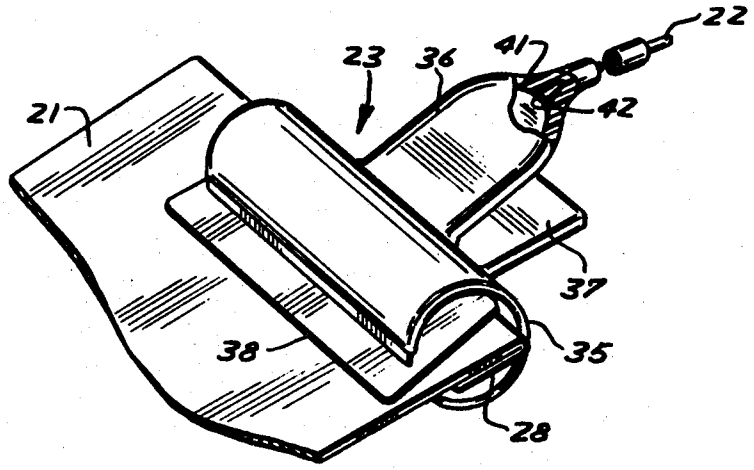

FIG. 1

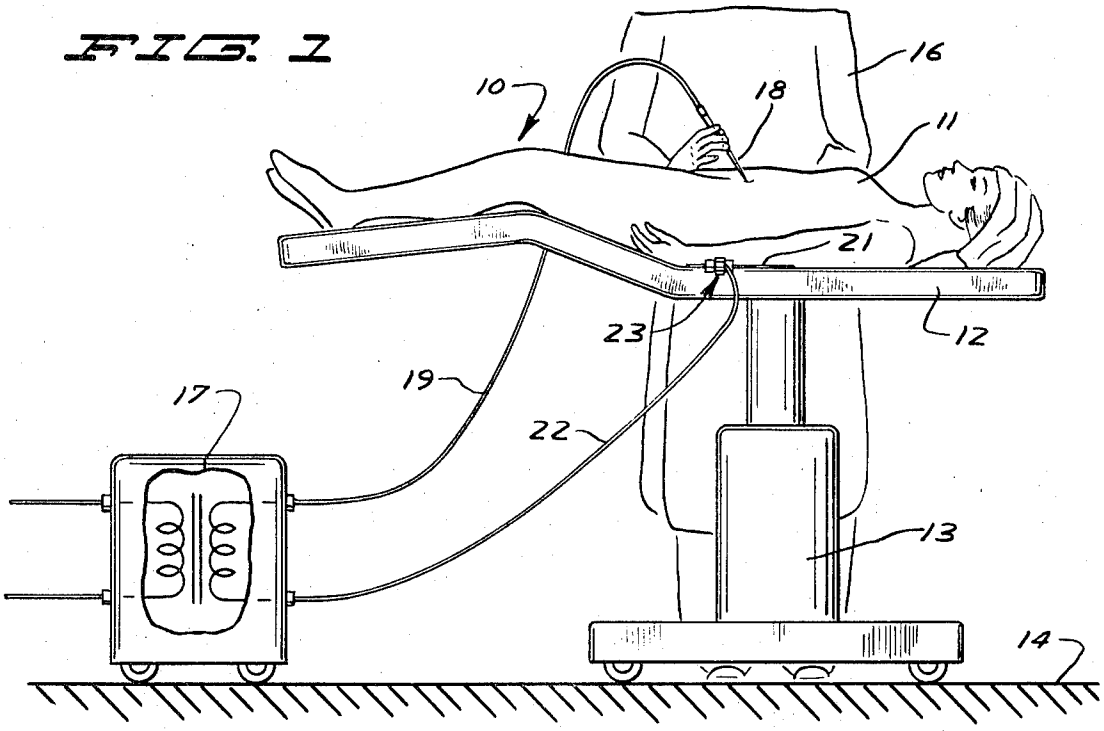

FIG. 2

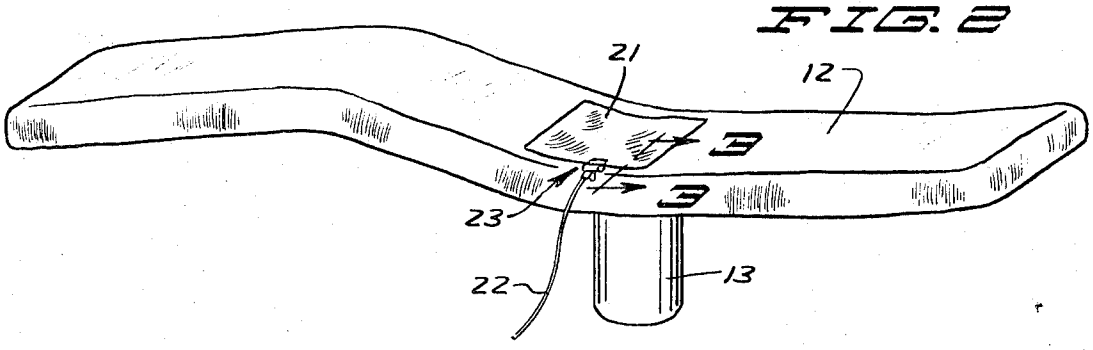

FIG. 5

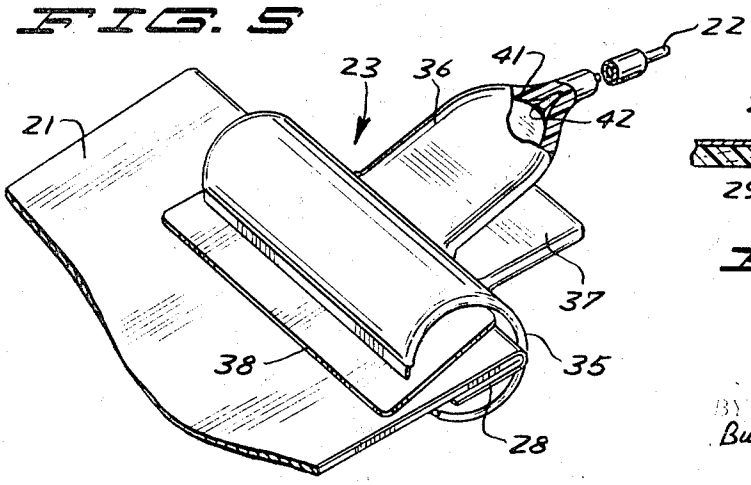

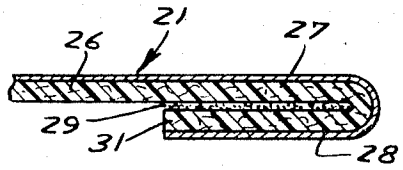

FIG. 3

INVENTOR
LEE R. BOLDUC

BY
Burd, MacEachron, Braddock,
Bartz & Schwartz
ATTORNEYS

FIG. 4

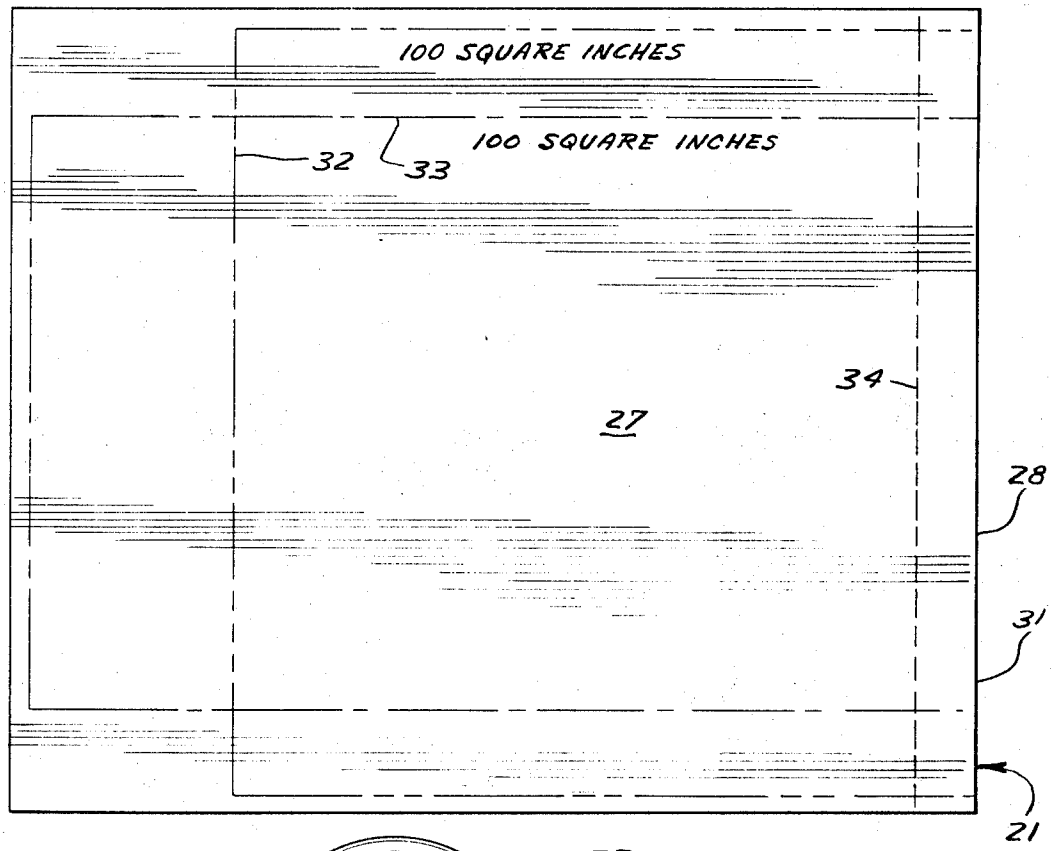

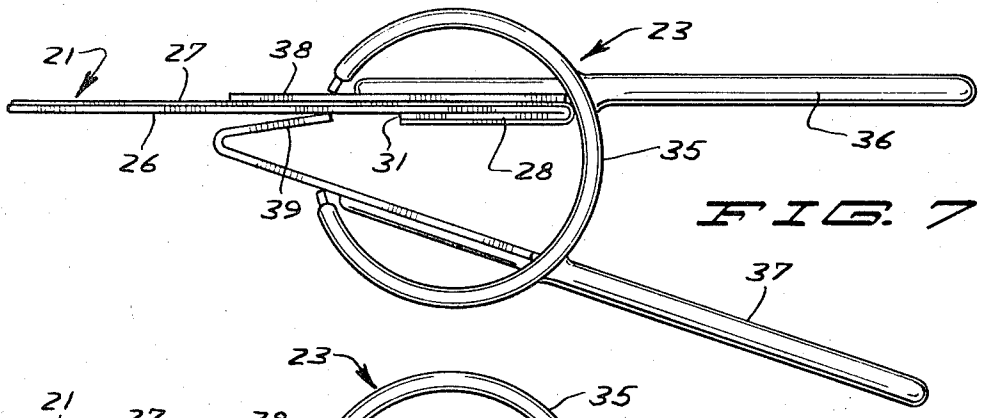

FIG. 7

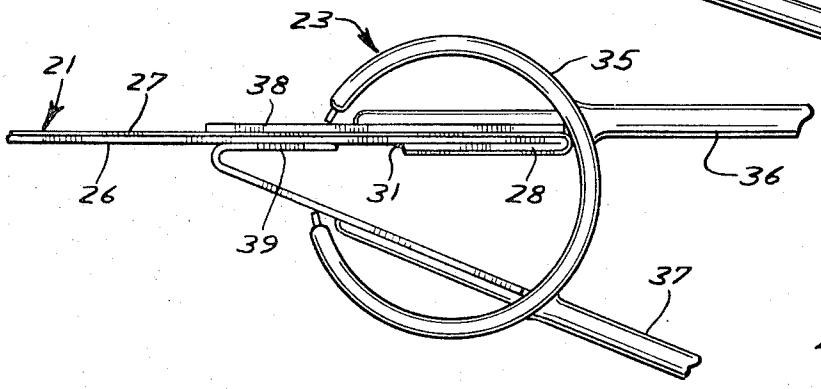

FIG. 6

LEE R. BOLDUC

Burd, MacLachron, Braddock,
Bartz & Schwartz
ATTORNEYS

FIG. 8

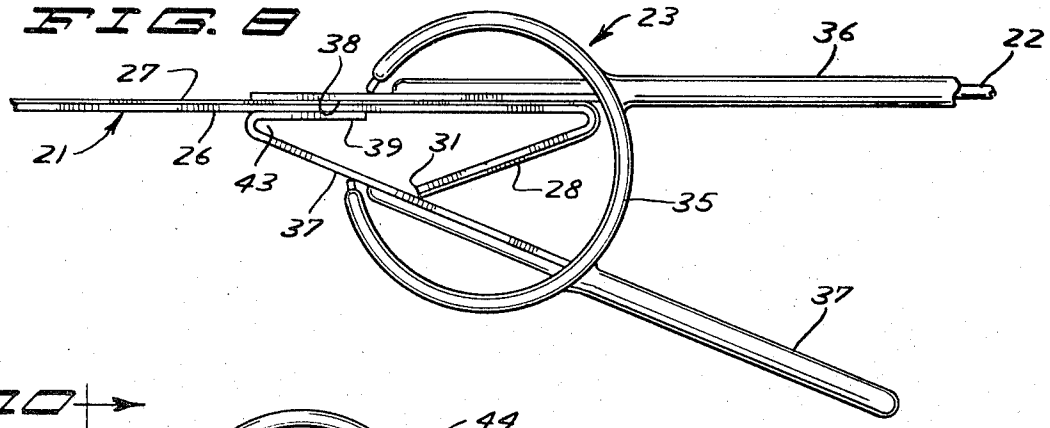

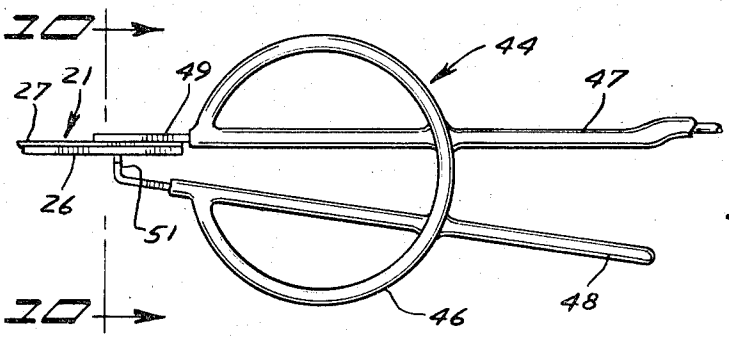

FIG. 9

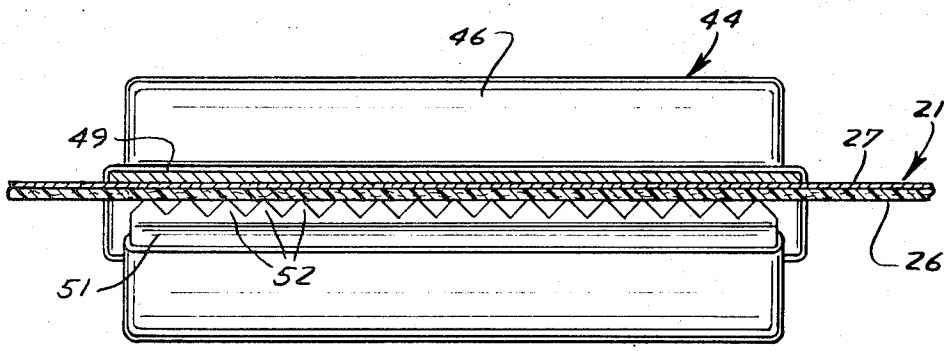

FIG. 10

INVENTOR
LEE R. BOLDUC

BY
Burd, MacEachron, Braddock,
Bartz & Schwartz
ATTORNEYS

DISPOSABLE GROUND PLATE ELECTRODE

BACKGROUND OF INVENTION

Present electrosurgical units used for cautery, fulguration and electrocoagulation utilize stainless steel and lead plates of varying thickness to ground the patient. These plates must be placed in engagement with the skin of the a patient to achieve a maximum contact area to avoid burning of the patient. The placement of the electrode on the patient varies according to the surgical area. The stainless steel and lead electrodes require extensive cleaning and scrubbing before reuse. In some instances a paste is used to reduce the skin resistance. This paste after becoming dry is difficult to remove from the electrodes. In addition, lead electrodes are bulky and heavy and at times cannot be bent to conform to the proper body contour. The present invention overcomes the disadvantages of the presently used grounding electrodes by providing a lightweight, relatively inexpensive, disposable, and flexible grounding electrode usable with an electrosurgical unit.

SUMMARY OF INVENTION

The invention relates to a grounding electrode and connecter usable in an electrosurgical unit. The electrode has a flexible base carrying a flexible electrical conductor sheet or skin. The connecter has a substantially flat surface engageable with the conductor skin to provide surface electrical contact between the connecter and the electrode. Cooperating with the flat surface is a member which holds the flat surface in surface engagement with the skin. The one edge of the electrode may have an inwardly turned flange which cooperates with the connecter to prevent the accidental removal of the connecter from the electrode. To ensure at least a minimum area of contact between the electrode and the patient, the surface of the electrode is provided with guide means which serve as indicia to outline a safe minimum area.

IN THE DRAWINGS

FIG. 1 is a diagrammatic view of the electrosurgical unit equipped with the ground electrode of the invention used on a patient lying on an operating table;

FIG. 2 is a perspective view of the ground electrode of the invention lying on the top of an operating table;

FIG. 3 is an enlarged sectional view taken along the line 3–3 of FIG. 2;

FIG. 4 is an enlarged plan view of the ground electrode showing the area indicia lines and the fold line for the end flange;

FIG. 5 is a perspective view of the releasable connecter attached to the edge of the ground electrode;

FIG. 6 is a side view of the connecter in assembled relation with the electrode;

FIG. 7 is a view similar to FIG. 6 showing the initial clamping of the connecter on the electrode;

FIG. 8 is a view similar to FIG. 6 showing the electrode with a folded flange;

FIG. 9 is a side view of a modified connecter attached to the ground electrode of the invention; and

FIG. 10 is an enlarged sectional view taken along the line 10–10 of FIG. 9.

Referring to the drawing there is shown in FIG. 1, an electrosurgical unit indicated generally at 10 illustrated in an operating environment on a patient 11 lying on a table 12. An upright base 13 supports the table 12 above floor 14 to locate patient 11 in a convenient position for surgeon 16. The electrosurgical unit 10 uses high frequency currents from a portable transformer 17 connected to an active electrode 18 by a cable or line 19. A ground plate electrode 21 connected by cable or line 22 to transformer 17 completes the circuit through the patient. A releasable connecter indicated generally at 23, electrically couples cable 22 with the ground plate electrode 21. Under operating conditions, high frequency currents flow through the patient 11 from the active electrode 18 and return to the ground through electrode 21 located under the patient 11 on the table 12. The placement of the ground plate electrode 21 on the patient varies according to the surgical area. The electrode 21 may be placed under the buttock, or wrapped around an arm or leg, to provide a maximum area of a flesh or skin contact. For proper patient grounding it has been found that a minimum of 100 square inches of surface contact is required between patient 11 and electrode 21.

Ground electrode 21 is a generally rectangular flexible sheet member capable of being shaped to fit the contour of the parts of the body as a leg or arm. As shown, in FIG. 2, the electrode 21 is placed on the table 12 so as to engage a large area of the skin in the posterior of the patient 11.

As shown in FIG. 3, ground electrode 21 has a flat and flexible base layer 26 which may be made of cardboard, paper or similar flexible and electrically insulative material. Located over the top surface of the base layer 26 is an electrical conductive skin 27. Skin 27 can be a metal sheet or foil, as aluminum foil. The base layer 26 is impregnated with a plastic material which bonds the skin 27 to the base layer 26. The plastic material increases the thermal characteristics of the electrode so that it can be placed in the autoclave for sterilization and is liquid proof.

A specific example of electrode 21 usable as a disposable item with an electrosurgical unit is as follows: The base layer is an 11 × 14 inch rectangular sheet of flexible, electrically insulative, cardboard about .024—.022 inches thick. A .003 inch aluminum foil covers the entire top surface of the cardboard and is bonded to the top surface of the cardboard with plastic bonding material impregnated in the cardboard. The plastic material makes the cardboard liquid and waterproof and autoclavable.

An end flange or flap 28 of electrode 21 is turned over and secured to the back of the base 26 with a bonding material 29, as adhesive or glue, to form a stop edge 31. The releasable connecter 23 cooperates with stop edge 31 to prevent the accidental removal of the connecter. The plastic impregnated in the base 26 may be utilized to bond the base and flange 28 together thereby to eliminate the bonding material 29.

As shown in FIG. 4, ground electrode 21 has a generally rectangular shape with the flange 28 extended transversely across the electrode 21. The skin 27 of the electrode has broken guide lines 32 to outline a square area approximately 100 square inches. The lines are parallel to the sides and ends of the electrode. Lines 32 outline a 10 inch square. In a similar manner broken lines 33 outline a rectangular area which is generally 100 square inches. Lines 33 also extend parallel to the sides and ends of the electrode and outline an area of approximately 100 square inches. Extended across the end of electrode 27 is a broken fold line 34 providing a guide for turning flange 31 under base layer 26 as shown in FIG. 8. Flange 28 may be prefolded and secured to base layer 26 as shown in FIG. 3.

Referring to FIGS. 6 and 7, the releasable connecter 23 comprises a wide C-clamp 35 pivotally mounting a pair of converging levers 36 and 37. The forward ends of the levers engage the open ends of the C-clamp so that the biasing force of the C-clamp holds the open ends of the levers into engagement with each other. Lever 36 has the forward flat end 38 having rectangular flat surface which is in substantial surface contact with the skin 27 of the ground electrode 21. Lever 37 has an inwardly turned leg 39 which engages the bottom of the base layer 26 to hold the skin 27 in surface contact with the flat end 38. As shown in FIG. 7, with the ground electrode 21 located between the forward ends of the levers 36 and 37 the terminal portion of leg 39 initially engages the bottom of base layer 26. As the compressive action of the C-clamp 35 moves the forward ends of the legs toward each other leg 39 is biased into a flat engagement with a base layer 26 distributing its holding force over a substantial area to keep skin 27 in surface contact with the top lever 36. With the leg 39 lying flat against the bottom of base layer 26 the end of the leg is in alinement with the stop end 31. This prevents accidental removal of the

C-clamp from the ground electrode **21**. In the event that the C-clamp does slide on the electrode the end of leg **39** will engage the stop end **31** precluding further movement of the connecter relative to the electrode **21**. The flat end **38** of lever **36** remains in surface contact with skin **27** providing continuous electrical connection.

As shown in FIG. **5**, the C-clamp and diverging portions of the levers **36** and **37** are coated with an insulating material **41** to preclude the grounding of the clamp and cable. The wire of cable **22** is secured by a permanent connection **42** to the end of the lever **36**. This permanent electrical connection between the cable and the connecter is enclosed with insulating material **41**.

Referring to FIG. **8**, there is shown a ground electrode **21** associated with a connecter **23**. The end flange **28** of electrode **21** is not secured to the base layer **26**. The flange **28** is formed by folding the electrode along the fold line **34** shown in FIG. **4**. On accidental movement of the connecter **23** relative to the ground electrode **21**, the stop end **31** will lodge in a transverse pocket **43** formed between the leg **39** and the forward end of the lever **37**. This prevents accidental removal of the connecter from the electrode.

Referring to FIGS. **9** and **10**, there is shown a modified releasable connecter indicated generally at **44** secured to the ground electrode **21** shown as a flat laminated sheet having a base layer **26** secured to an electrical conductive skin **27**. Connecter **44** is an elongated C-clamp **46** pivotally carrying a pair of converging levers **47** and **48**. The forward portion of lever **47** has a flat surface which engages the skin **27**. This surface is held in engagement with the skin by the action of the lever **48** on the base **26**. Lever **48** has an upwardly directed flange **51** formed with a plurality of transversely spaced teeth **52**. The biasing force of the C-clamp **46** forces teeth **52** into the biting engagement with the base layer **26** along the entire width of the C-clamp thereby holding the connecter in assembled relation with the ground electrode **21**.

In use it is the practice to apply an electrode paste or jelly to the patient over the area to be in contact with the ground electrode. In FIG. **1** the jelly would be placed on the buttocks and lower back of the patient **11** to reduce the skin resistance to the flow of electrical current to a minimum. The electrode **21** being a relatively large flexible plate will bend and take the shape of the contour of the body so that maximum skin area is engaged by the metal skin of the electrode. The ground electrode **21** is initially cut along the lines **32** or **33** to a shape to ensure the maximum skin contact with the patient. An electrode to be used on a limb is cut to a rectangular shape represented by line **33** to provide an elongated surface which may be wrapped around the limb. The electrode **21** can be cut to any shape and the corners can be trimmed to reduce exposed parts of the skin **27**. This substantially reduces the likelihood of the surgeon or nurses from accidentally contacting the grounded skin **27**. The flange **28** is turned about the line **34** so that the stop end **31** would cooperate with the leg **39** or its pocket **43** to prevent the accidental removal of the connecter from the electrode.

The connecter is attached to the electrode by opening the forward portions of the levers **36** and **37** and inserting the one edge of the electrode between the levers as shown in FIG. **7**. On release of the force on the outer portions of the levers the biasing action of the C-clamp closes the levers providing surface contact between the base layer **26** and the skin **27** as shown in FIG. **6**. This provides relatively large surface contact between the connecter **23** and the skin **27** to insure proper electrical connection between the connecter and the electrode. With the flange **28** folded back and secured to the base layer **26**, as shown in FIGS. **6** and **7**, the connecter **22** cannot be accidentally removed from the electrode. The large surface area electrical connection between the patient and the electrode, reduces the chance that the current will follow an alternate path to the ground in places where the patient's skin touches the grounded table **12**. This eliminates relatively small area contact when there is high concentrated current density which will develop heat and cause burns. With the base layer **26** having electrical insulating properties the skin **27** is not grounded on table **12**. This eliminates collateral current flow through the table.

After the surgical operation the electrode **21** is disposed of. The connecter **23** is cleaned before attached to another electrode.

There have been shown and described preferred embodiments of the ground electrode and connecter. It is to be understood that various changes and substitutions and deletions may be made by those skilled in the art without departing from the spirit of the invention. The invention is defined in the following claims.

I claim:

1. A ground plate electrode for engaging a surface of a body and an electrical connecter comprising in combination: an electrode having a base layer and an electrically-conductive skin secured to and substantially covering at least one surface of the base layer, said electrically-conductive skin having a surface area of substantially about 100 square inches for engagement with the surface of a body, one edge of said electrode having a flange, an electrical connecter releasably attached to the electrode, said connecter having a member with a flat electrical conductive surface located in surface engagement with a portion of the skin, means cooperating with the flange to prevent accidental separation of the connecter from the electrode, and holding means for maintaining the electrical conductive surface in surface engagement with the skin.

2. The combination of structure of claim **1** wherein said connecter has an inwardly directed leg facing the flat surface and engageable with the flange to prevent accidental separation of the connecter from the electrode.

3. The combination of structure of claim **2** wherein said turned flange is secured to the base layer.

4. The combination of structure of claim **1** wherein said connecter is a clamp having a first lever having a flat electrical conductive surface and a second lever having a portion located adjacent the flat surface, said holding means including means biasing the flat surface toward the portion.

5. The connecter of claim **4** wherein said portion comprises an inwardly directed flat leg having a flat surface opposite the flat surface on the first lever.

6. The connecter of claim **4** wherein said portion has a plurality of teeth facing the flat surface on the first lever.

7. The combination of structure of claim **1** wherein the base layer is a flat flexible sheet member and the skin is an aluminum foil sheet, and bonding means securing the aluminum foil sheet to one surface of the base layer.

8. The combination of structure of claim **1** wherein said holding means is a C spring member, said connecter including levers projected through openings in the back of the C member and engageable with the open sides of the C member, and an electrical insulative coating enclosing the C member and portions of the levers projected outwardly from the back of the C member.

9. The combination of structure of claim **1** including: indicia means on the electrode outlining the surface area on the electrically-conductive skin of 100 square inches to insure substantial electrical contact of the skin with the surface of a body.

10. A plate electrode and electrical connecter comprising in combination: a plate electrode consisting of a one-piece sheet member having a nonelectrical conductive base, an electrical conductive skin means substantially covering one side of the base, and means securing the entire inner side of said skin means to the one side of the base, said skin means having a substantial surface area for engagement with the surface of a body to make a large surface electrical contact between the skin means and the body, an electrical connecter releasably attached to one end of the plate electrode, said connecter having a first lever and a second lever, at least one of said levers having flat electrical conductor means in substantial surface engagement with the skin means at one end of the plate elec-

trode, holding means for maintaining the levers together in closed positions so that the flat electrical conductor means is held in surface engagement with the skin means, and coacting means on said one end of the plate electrode, formed by turning one edge on itself to form a flange having a stop edge at said one end of the plate electrode, and a leg facing the flat electrical conductor on the other of said levers, said leg having a portion engaging the nonelectrical conductive base and being engageable with the stop edge to prevent accidental separation of the electrical connecter from the ground plate electrode.

11. The combination of structure of claim **10** wherein said second lever has a portion located adjacent the flat electrical conductor means, said holding means including spring means to bias the portion toward the flat electrical conductor means on the first lever.

12. The combination of structure of claim **11** wherein said portion comprises a leg having a flat surface opposite the flat surface of the electrical conductor means.

13. The combination of structure of claim **10** wherein the base is a flat nonconductive flexible layer and the skin means is an aluminum foil sheet, and said means securing the skin means to the base comprises bonding means securing the entire aluminum foil sheet to one surface of the base.

14. The combination of structure of claim **13** wherein the bonding means is plastic material impregnated in the base to bond the aluminum foil to said base.

15. The combination of structure of claim **10** wherein the ground plate electrode has indicia means outlining a minimum surface area of the skin means to insure a substantial electrical contact between the skin means and the surface of a body.

16. A plate electrode for engaging a surface of a body and an electrical connecter comprising: a plate electrode consisting of a one-piece sheet member having a nonelectrical conductive base, an electrical conductive skin means secured to one side of the base, said skin means having a substantial surface area for engagement with the surface of a body to make a large surface electrical contact between the skin means and the body, one edge of said sheet member having a portion turned on itself forming a flange with a stop edge, an electrical connecter releasably attached to said sheet member, said connecter having an electrical conductor means located in substantial surface engagement with the skin means, leg means in engagement with the nonelectrical conductive base and cooperating with the stop edge of the flange to prevent accidental separation of the connecter from the sheet member, means providing a space for accommodating the flange when folded back, and holding means for maintaining the electrical conductor means in surface engagement with the skin means.

17. The electrode and connecter of claim **16** wherein the skin means has substantially about 100 square inches.

18. The electrode and connecter of claim **16** wherein the connecter has a first member carrying the electrical conductor means and a second member providing the space for the flange, said space being located between the first member and the second member, said holding means comprising spring means for urging the second member toward the first member.

19. The electrode and connecter of claim **18** wherein the second member has a flat portion facing the electrical conductor means, said spring means urging the flat portion toward the electrical conductor means.