United States Patent

[11] 3,536,070

[72] Inventor **Robert M. Bovard**
Costa Mesa, California

[21] Appl. No. **627,903**
[22] Filed **April 3, 1967**
[45] Patented **Oct. 27, 1970**
[73] Assignee **By mesne assignments to Automatic Sprinkler Corporation of America, doing business as The Illuminating Building, Cleveland, Ohio, a corporation of Ohio**

[54] **CHEMICAL SOLID STATE BREATHING FLUID SUPPLY SYSTEM**
12 Claims, 4 Drawing Figs.

[52] **U.S. Cl.** **128/142.3,** 128/203, 128/205
[51] **Int. Cl.** **A62b 7/08**
[50] **Field of Search** 128/142.3, 203, 205, 208, 146.4, 146

[56] **References Cited**

UNITED STATES PATENTS

2,507,450	5/1950	Millikan et al.	128/203
2,931,355	4/1960	Miller et al.	128/203X
2,934,293	4/1960	Boehme et al.	128/203X

FOREIGN PATENTS

828,362	2/1960	Great Britain	128/203

Primary Examiner—Richard C. Pinkham
Assistant Examiner—Thomas Zack
Attorney—Christel and Bean

ABSTRACT: A chemical, solid state, oxygen generator and a plurality of face masks are stored within a housing located above each passenger and crew station in an aircraft. Aneroid operated doors on the housings open in response to cabin depressurization and the masks fall into position for use by the passengers and crew. The oxygen generator at each station is actuated, independently of the generators at the other stations, by pulling on any one of the masks at that station and provides oxygen to each of the masks at that station. The device for actuating the generator may be a lanyard connected to the generator at one end and the face mask at the other end. This lanyard is shorter than the conduit supplying breathable fluid to the mask and therefore the conduit remains slack when the mask falls. When the user pulls on the mask, the lanyard operates an ignitor pin to actuate the oxygen generator.

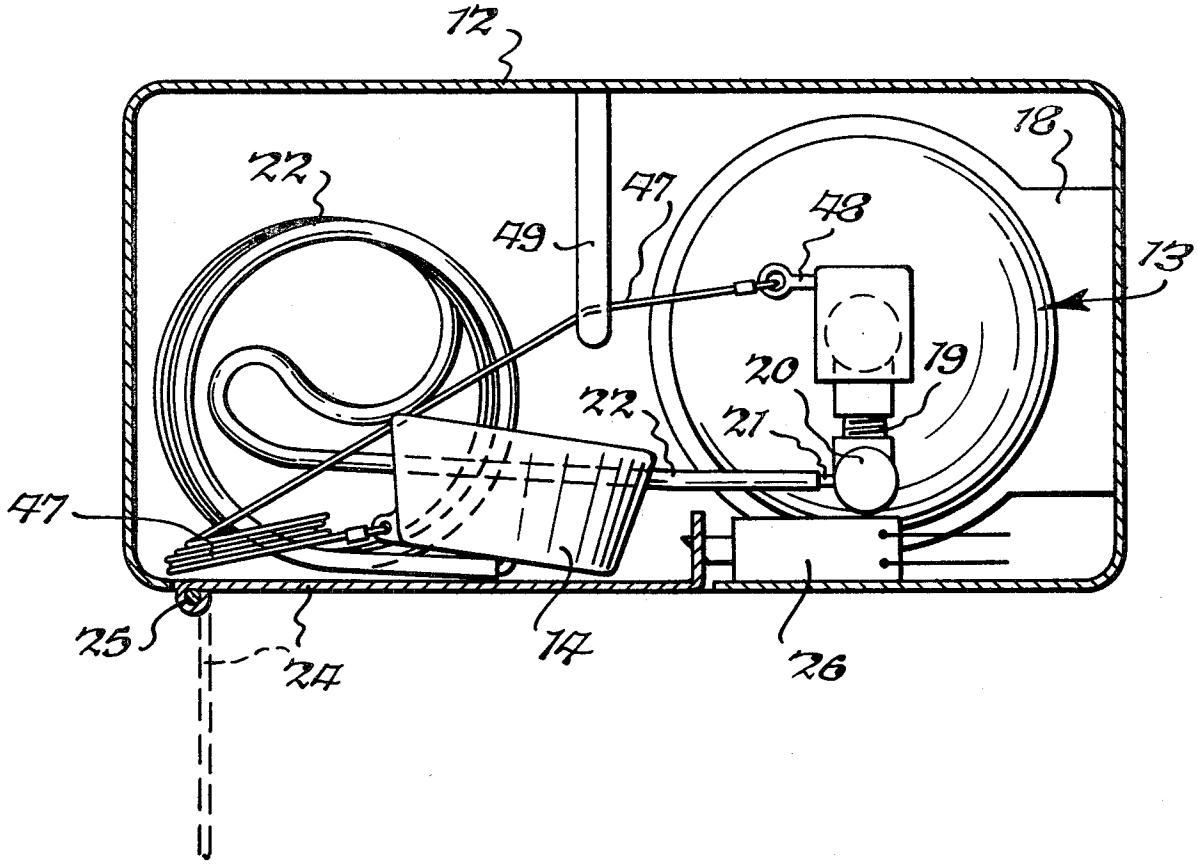

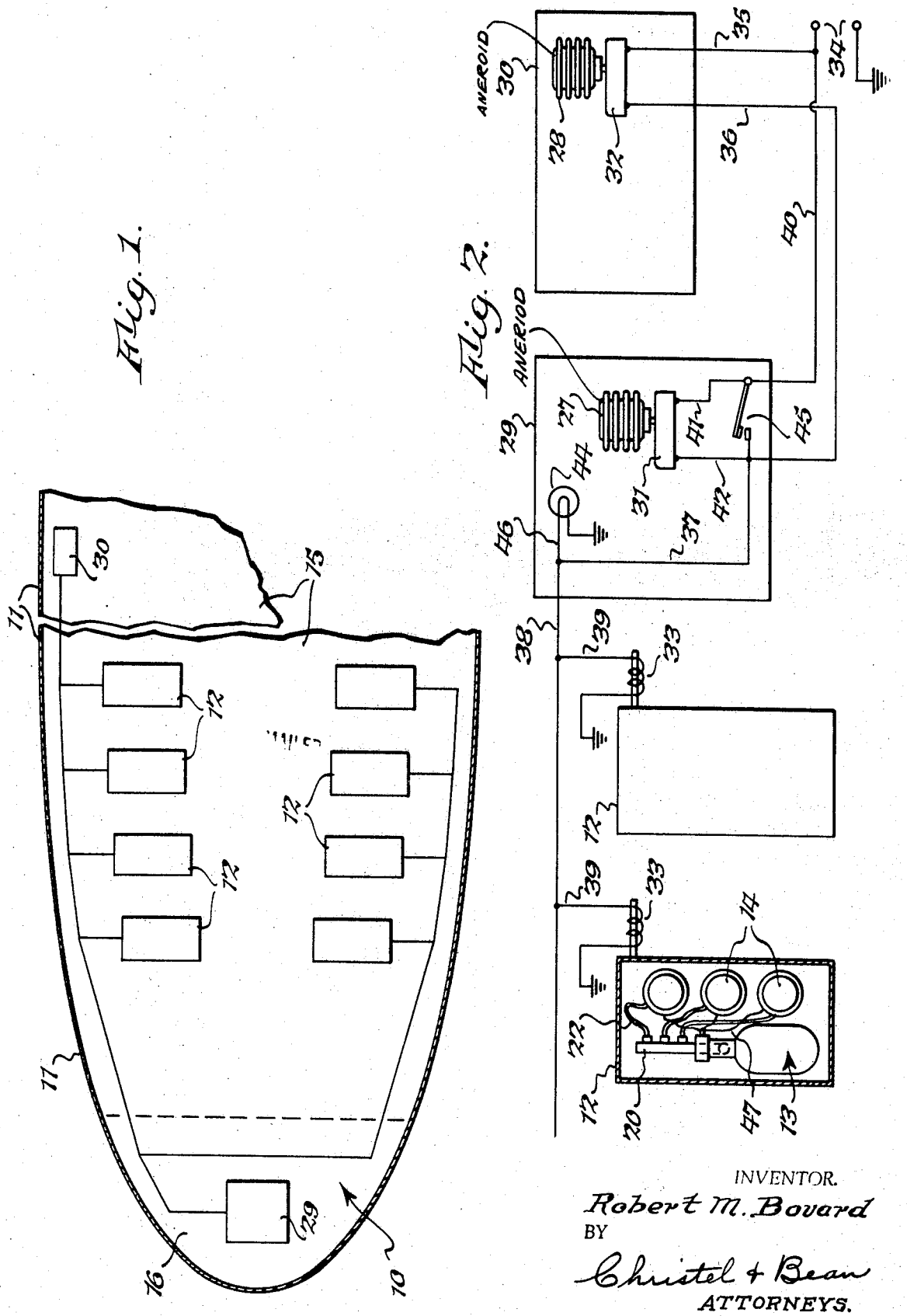

INVENTOR.
Robert M. Bovard
BY
Christel & Bean
ATTORNEYS.

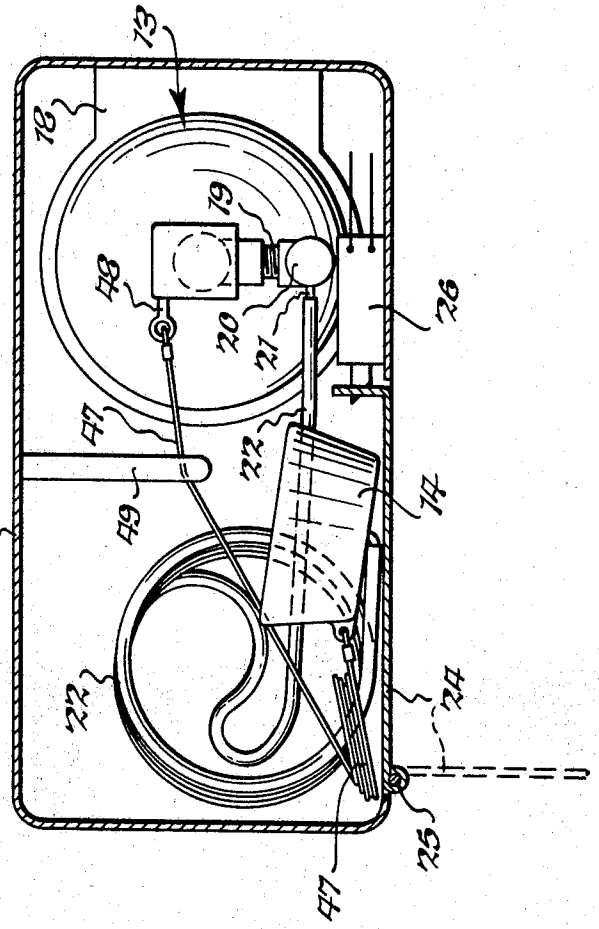

Fig. 4.

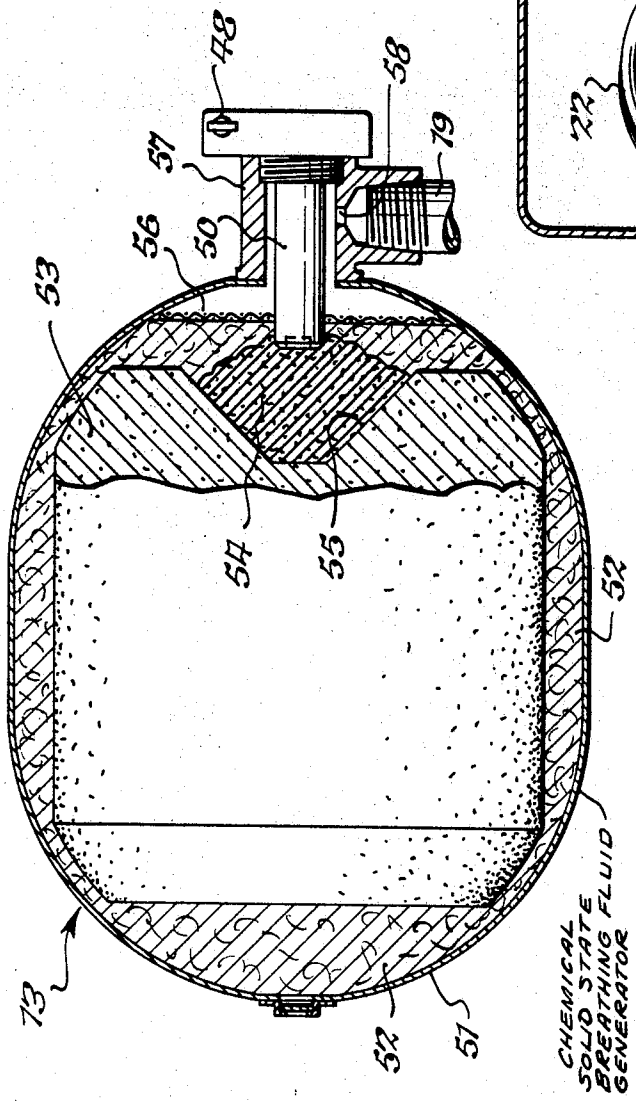

Fig. 3.

INVENTOR.
Robert M. Bovard
BY
Christel & Bean
ATTORNEYS.

CHEMICAL SOLID STATE BREATHING FLUID SUPPLY SYSTEM

BACKGROUND OF THE INVENTION

The present invention relates to a breathing fluid supply system, and in particular, to an auxiliary breathing fluid supply system having a plurality of breathing masks and independently actuated chemical, solid state, breathing fluid generators disposed adjacent passenger and crew stations in a vessel such as an aircraft for emergency use in the event of cabin depressurization or otherwise.

Known breathing fluid supply systems having face masks for use at individual passenger and crew stations have a centrally located auxiliary breathing fluid supply, usually in the form of a pressurized reservoir or bottle, which depends on a series of conduits passing through the aircraft structure to transmit the breathing fluid to the face masks at the various individual stations. This type of system requires a large number of valves and seals and constant maintenance if the system is to be reliable and operational at all times. Any leak or rupture in the reservoir or the conduits creates a potential hazard in the event of a fire whether the aircraft be in flight or merely stationary on the ground.

SUMMARY OF THE INVENTION

It is a primary object of the present invention to provide a breathing fluid supply system having a plurality of self-contained breathing fluid sources for providing breathing fluid to a plurality of associated individual crew and passenger stations in an aircraft or the like, wherein breathing fluid communication between stations is eliminated. This is accomplished by the present invention which provides a chemical, solid state, breathing fluid generator and one or more masks at each station, the breathing fluid generator at each station being operable independently of the generators at other stations.

It is another object of the present invention to provide a breathing fluid supply system having the foregoing characteristics wherein the breathing fluid generator at each station must be positively actuated by a user thereof at that station. To this end, the present invention provides a housing carrying the breathing fluid generator and one or more breathing masks, the breathing mask or masks being attached to the actuator of the breathing fluid generator whereby separating movement of one of the masks from the actuator actuates the generator to provide breathing fluid to the masks.

It is still another object of the present invention to provide the foregoing in a breathing fluid supply system which is highly reliable and requires little or no maintenance.

In one aspect thereof, the present invention is characterized by a housing, a chemical solid state breathing fluid generator mounted in the housing, a face mask carried by the housing and adapted to provide breathing fluid to a user thereof, a flexible conduit connecting between the face mask and breathing fluid generator, means providing for the removal of the face mask from the housing, actuating means for the breathing fluid generator, and means connecting the face mask with the actuating means and responsive to separating movement therebetween to actuate the generator and provide breathing fluid through the conduit to the face mask.

The foregoing and other objects, advantages and characterizing features of the breathing fluid supply system of the present invention are pointed out in the following detailed description of a typical embodiment thereof considered in conjunction with the accompanying drawings depicting the same wherein like numerals represent like parts throughout the various views.

BRIEF DESCRIPTION OF THE DRAWING

FIG. 1 is a fragmentary, schematic layout of a breathing fluid supply system arranged in accordance with the present invention within the fuselage of an aircraft shown in cross section and partly broken away;

FIG. 2 is a schematic illustration of a control circuit for use with the breathing fluid supply system of FIG. 1, one of the generator or mask housings being shown in cross section;

FIG. 3 is enlarged cross-sectional view of one of the breathing fluid generators; and

FIG. 4 is a transverse cross-sectional view, on an enlarged scale, of a generator and mask housing.

DESCRIPTION OF THE PREFERRED EMBODIMENT

There is schematically illustrated in FIG. 1 one form of a breathing fluid supply system, generally indicated 10, arranged in accordance with the present invention and located in a vessel, in this instance, an aircraft indicated at 11. A plurality of housings 12, each containing a chemical solid state breathing fluid generator 13 and a plurality of face masks 14 (FIGS. 2 and 4) are located in aircraft 11 above various passenger stations. The passenger stations can be the usual transverse rows of seats arranged on opposite sides of an aisle in a passenger compartment 15 located behind the crew compartment 16 in the forward part of the aircraft, the aircraft structure comprising the seats and aisles not being shown. It is apparent that one or more similar housings 12 also can be provided in crew compartment 16, and elsewhere although these are not shown for convenience in illustration. Each housing 12 can serve a plurality of passengers at each station, the illustrated form providing face masks for three individuals at a station although a greater or a lesser number of face masks obviously could be provided at each station, depending upon the number of persons to be served.

Referring to FIGS. 2 and 4, a generator 13 is s fixed within and at one side of each housing 12 by a suitable mounting bracket 18 and has a fluid outlet 19 communicating with a cylindrical manifold 20. Manifold 20 has a plurality of outlet nipples 21 connecting with the ends of a like number of flexible fluid supply conduits 22, the other ends of conduits 22 connecting with the several face masks 14. In the illustrated form, each mask 14 comprises a truncated hollow cone of suitable material such as synthetic sponge rubber open through its larger end which is adapted to be held against the face. The smaller end of each mask 14 is closed, and is connected to the other end of an associated conduit 22 whereby breathing fluid is provided through conduit 22 into the mask. Other face masks, including masks equipped with demand regulators, can be utilized in the present invention although the illustrated form is preferred in view of its low cost and the limited time during which it is intended to be used.

Each housing 12 has a door or shelf 24 suitably pivoted at 25 for swinging movement between the closed position shown in FIG. 4 and an open position as illustrated in broken lines therein. Each door 24 forms a portion of the underside of its housing 12 in laterally offset relation to generator 13 and manifold 20 therein. In the normal, inoperative condition of the fluid supply system, masks 14 and their associated coiled flexible conduits 22 rest freely on shelf 24, in stored position within housing 12. Each shelf 24 is held in closed position by a solenoid operated latch generally indicated at 26 (Fig. 4) the operation of which will now be described.

To release door or shelf 24 and thus drop the masks 14 supported thereby into position for use at each passenger station, latches 26 are automatically actuated in response to a drop in the pressure within the aircraft below a predetermined pressure. The pressure is sensed by a pair of aneroids 27 and 28 housed at 29 and 30 in the crew and passenger compartments 16 and 15, respectively. Aneroids 27 and 28 can be conventional in design, and are arranged in controlling relation to a pair of switches 31 and 32, respectively which are arranged in parallel controlling relation to an energizing circuit for solenoids 33 which operate the associated latches 26. A current source is provided at 34 and actuation of either switch 31 or 32 in response to the sensing of a predetermined pressure by its corresponding aneroid 27 and 28 completes an energizing circuit with all of the solenoids 33 to release latches 26

whereby all of the doors **24** freely pivot downwardly. For example, should the pressure in passenger compartment **15** drop below the predetermined pressure, aneroid **28** operates to close switch **32** and complete a circuit including current source **34** and leads **35, 36, 37, 38** and **39** to energize solenoids **33** and thereby release door **24**. Should the pressure in pilot compartment **16** drop below the predetermined pressure, aneroid **27** operates to close switch **31** and complete a circuit including current source **34** and leads **40, 41, 42, 37, 38** and **39** to likewise energize solenoids **33** and thereby release doors **24**.

An indicator light **44** and a manually operated switch **45** are included in the control circuit and are located in pilot compartment **16**. Thus the pilot can manually close switch **45** to energize a circuit including current source **34** and leads **40, 37, 38** and **39** to actuate solenoids **33** and release doors **24**. Whenever the control circuit is energized, either manually or automatically by either aneroid, indicator light **44** is energized via lead **46** to give visual warning to the pilot that the pressure within the aircraft has dropped below the predetermined pressure and that auxiliary breathing masks have dropped into the passenger stations.

Upon release of its associated latch **26**, shelf **24** pivots downwardly under the influence of gravity to an open position as indicated by broken lines in FIG. **4**, and masks **14** will freely fall and drop down from housing **12** into positions within reach of individuals at associated passenger stations. The free fall of masks **14** is arrested by lanyards **47** which connect each of the masks **14** with an ignitor pin **48** on the generator **13** associated with those masks, the lanyards **47** threading through a common eyelet **49** fixed to housing **12** to provide substantially direct axial withdrawing force to pin **48**. Lanyards **47** thus support masks **14** from housing **12** within reach of individuals at the passenger stations and, in this position, hang taut under the weight of masks **13** while conduits **22** remain slack. The force applied to ignitor pin **48** via lanyards **47** by the arrestment of the masks is insufficient to overcome the resistance offered by pin **48** and withdraw it from ignitor assembly **50**. Further traction on lanyard **47**, as by the positive force of an individual pulling downwardly on one of masks **14**, is required to withdraw pin **48** and actuate generator **13**.

Breathing fluid generator **13** (FIG. **3**) comprises a metal or ceramic canister **51** having a suitable interior lining of filter and insulating material **52**, such as fibreglass. Canister **51** contains an oxygen liberating composition, generally designated **53**, such as a chlorate or a perchlorate which generates oxygen on combustion, a metal powder such as iron or carbon for burning and supplying part of the heat needed for combustion, a binder such as inorganic glass fibers for holding the mass together and aiding in the even decomposition of the chlorate or perchlorate, and a peroxide for chemically eliminating the traces of chlorine gas released during thermal breakdown of the chlorate or perchlorate. Such oxygen candle compositions are known per se and form no part of the present invention.

Composition **53** is pressed molded or cast to form a consolidated body having a substantially cylindrical shape, as illustrated, and has an ignition section **54** formed within a recess **55** on an end face thereof, ignition section **54** comprising the foregoing composition enriched with metal powder, such as iron, to provide a concentrated area of intense heat when ignited. A filter screen **56** separates composition **53**, ignition section **54** and insulation and filter material **52** from an outlet nipple **57** having a lateral outlet orifice **58**. Outlet nipple **57** houses ingitor assembly **50** which can be of the well known percussion fired squib type operable in response to the withdrawal of ignitor pin **48**, this being conventional as typified by the bouchon of a hand grenade. The details of ignitor assembly **50** are known, form no part per se of the present invention and accordingly require no further description. Electrical or other conventional oxygen candle ignitors also can be used. Thus, by withdrawing pin **48**, ignitor assembly **50** ignites ignition section **54** which in turn ignites oxygen generating composition **52**.

The operation is believed to be apparent from the foregoing description. Latches **26** operate automatically in response to de-pressurization within the aircraft or manually to release doors **24** whereby masks **14** gravitate downwardly to positions where they are suspended by lanyards **47** within reach of individuals in the crew and passenger stations. Pulling downwardly on any of the masks **14** and/or attached lanyards **47** withdraws pin **48** from ignition assembly **50**, of the generator **13** associated with those masks. This ignites composition **53** to thereby generate oxygen which passes through insulator and filter **52**, screen **56**, orifice **58** in outlet nipple **57**, outlet conduit **19**, into manifold **20** and out through nipples **21** into each of the masks via conduits **22**.

It is seen that the individual generators **13** are independently actuated by individuals at the various stations and that if one or more stations are unoccupied, the generator at that station or stations remains unactuated and ready for future use. Moreover, oxygen generators **13** at each station can be actuated by simple traction on any one of masks **14** at that station whereby oxygen will flow to all of the masks **14** at that station. It is apparent that sequentially actuated generators or a single generator having sequentially actuated generating stages could also be utilized at each station whereby successive quantities of oxygen could be provided by successively pulling lanyards **47** to thereby provide for multiple emergency situations.

Thus, my invention fully accomplishes its intended objects. Oxygen is generated at each station independently of the others, as it is needed. There is no piping of oxygen between stations, or to the stations from a remote source, and the problems inherent in the storage of oxygen under pressure are avoided.

Having thus described and illustrated a preferred form of my invention, it will be understood that such description and illustration is by way of example only and that such modifications and changes as may suggest themselves to those skilled in the art are intended to fall within the scope of the present invention as defined by the appended claims.

I claim:

1. A breathing fluid supply system comprising a housing, a chemical solid state breathing fluid generator mounted in said housing, a face mask carried in said housing and adapted to provide breathing fluid to a user thereof, flexible conduit means connecting between said face mask and said breathing fluid generator, means providing for the displacement of said face mask from said housing, actuating means for said breathing fluid generator, and user actuated means connecting said face mask with said actuating means and operable upon predetermined separating movement therebetween after said mask has been made available to a user to actuate said generator and provide breathing fluid through said conduit means to said face mask, whereby breathing fluid is generated only after actuation of said generator by a user of said mask.

2. A breathing fluid supply system according to claim **1** including a manifold having a plurality of outlets and communicating with said generator, a plurality of face masks carried within said housing, said flexible conduit means including conduits communicating between said face masks and said outlets, and means connecting each of said face masks with said actuating means and operable upon predetermined separating movement between any one of said face masks and said actuating means to actuate said generator and provide breathing fluid to at least said one of said face masks.

3. A breathing fluid supply system according to claim **1** wherein said displacement means includes a door mounted on said housing for movement between open and closed positions, a latch for retaining said door in the closed position, and an aneroid means operable to release said latch in response to a pressure change beyond a predetermined pressure.

4. A breathing fluid supply system according to claim **1** wherein said housing is positioned above the intended position of use of said mask, and wherein said displacement means includes a door pivotally mounted on the underside of said hous-

ing and normally supporting said face mask in its closed position, and means for releasing said door for swinging movement to an open position whereby said mask drops from said housing.

5. In a vessel having a plurality of user stations, a multiple source breathing fluid supply system for providing breathing fluid at each of said stations comprising a housing disposed at each station, a chemical solid state breathing fluid generator mounted in each of said housings, a face mask carried in each of said housings and adapted to provide breathing fluid to a user thereof at its associated station, flexible conduit means connecting between said face masks and said breathing fluid generators, means providing for the displacement of said face masks from their associated housings, actuating means for each of said breathing fluid generators, and user actuated means connecting each of said face masks with its associated actuating means and operable upon predetermined separating movement therebetween to actuate the corresponding generator after said masks have been made available to users, whereby breathing fluid is provided to the face mask at each station independently of the other stations, and whereby breathing fluid is generated at each station only after actuation of the generator at that station by a user of a face mask at that station.

6. A breathing fluid supply system according to claim 5 including a manifold for each of said generators and having a plurality of outlets, a plurality of face masks carried within each of said housings, said flexible conduit means including conduits communicating between said face masks and said outlets at each of said stations, and means at each station connecting each of said face masks with the generator actuating means at that station, said connecting means being operable upon predetermined separating movement between any one of said face masks and its associated actuating means to actuate the associated generator and provide breathing fluid to at least said one of said face masks.

7. A breathing fluid supply system according to claim 5 wherein said displacement means includes a door mounted on each of said housings for movement between open and closed positions, latches normally maintaining said doors in said closed position, and aneroid means arranged in controlling relation to said latches and responsive to a pressure change beyond a predetermined pressure to release said latches.

8. A breathing fluid supply system according to claim 7 wherein said housings are mounted above the point of intended use of said masks at said stations, and wherein said doors are on the underside of said housings and normally support said masks within said housing, said doors pivoting downwardly in response to the unlatching thereof whereby said masks drop into their corresponding stations from their associated housings.

9. A breathing fluid supply system comprising a housing having door means, a chemical solid state breathing fluid generator mounted in said housing, a face mask stored in said housing, means including door control means for making said mask available to a user, conduit means connecting said face mask to said breathing fluid generator, actuating means for said breathing fluid generator, and user actuated means connecting said face mask to said actuating means and operable upon predetermined separating movement therebetween after said mask has been made available to actuate said generator and supply breathing fluid through said conduit means to said face mask, whereby breathing fluid is generated only upon actuation of said generator by a user.

10. In a vessel having a plurality of user stations, a multiple source breathing fluid supply system for providing breathing fluid at each of said stations comprising a housing disposed at each station, said housings having door means, a chemical solid state breathing fluid generator mounted in each of said housings, a face mask stored in each of said housings, means including door control means for making said masks available to users at said stations, conduit means connecting between said face masks and said breathing fluid generators, actuating means for each of said breathing fluid generators, and user actuated means connecting each of said face masks to its associated actuating means and operable upon predetermined separating movement therebetween after said masks have been made available to users to actuate the corresponding generator, whereby breathing fluid is provided to the face masks at each station independently of the other stations, and whereby breathing fluid is generated at each station only after actuation of the generator at that station by a user of a face mask at that station.

11. A breathing fluid supply system comprising a housing, a chemical solid state breathing fluid generator mounted in said housing, a face mask carried in said housing and adapted to provide breathing fluid to a user thereof, flexible conduit means connecting between said face mask and said breathing fluid generator, means providing for the displacement of said face mask from said housing, actuating means for said breathing fluid generator, and means connecting said face mask with said actuating means and operable upon predetermined separating movement therebetween to actuate said generator and provide breathing fluid through said conduit means to said face mask, wherein said connecting means includes a lanyard, said conduit means having sufficient length to be slack when said lanyard becomes taut in response to said separating movement.

12. In a vessel having a plurality of user stations, a multiple source breathing fluid supply system for providing breathing fluid at each of said stations comprising a housing disposed at each station, a chemical solid state breathing fluid generator mounted in each of said housings, a face mask carried in each of said housings and adapted to provide breathing fluid to a user thereof at its associated station, flexible conduit means connecting between said face masks and said breathing fluid generators, means providing for the displacement of said face masks from their associated housings, actuating means for each of said breathing fluid generators, and means connecting each of said face masks with its associated actuating means and operable upon predetermined separating movement therebetween to actuate the corresponding generator whereby breathing fluid is provided to the face mask at each station independently of the other stations, wherein said displacement means includes a door mounted on each of said housings for movement between open and closed positions, latches normally maintaining said doors in said closed position, and aneroid means arranged in controlling relation to said latches and responsive to a pressure change beyond a predetermined pressure to release said latches, wherein said housings are mounted above the point of intended use of said masks at said stations, and wherein said doors are on the underside of said housings and normally support said masks within said housing, said doors pivoting downwardly in response to the unlatching thereof whereby said masks drop into their corresponding stations from their associated housings, wherein said vessel is divided into compartments and said stations are located in at least one of said compartments, and wherein said aneroid means include a first aneroid located in said one compartment and a second aneroid located in another of said compartments, each of said aneroids being operable to release all of said latches independently of the other aneroid, together with manually operable means for releasing all of said latches independently of said aneroids.